Rapport de Projet

RF Harvesting : Récupération d'Énergie Ambiante

Mathis Rudkiewicz
Sébastien Vausort
Option SE-ER E4a, ESEO – 2026

***Résumé*—This document presents the various steps carried out during the "RF Energy Harvesting" module taught by Mohsen Koohestani at ESEO. It covers the full progression of the project, from the initial system simulations performed using Analog Device Systems software, through to the study and design of a radio frequency energy harvesting system (RF Harvesting). The goal is to capture ambient electromagnetic energy from Wi-Fi and cellular networks in order to power low-consumption IoT sensors, with a particular focus on optimizing the impedance matching circuit and the rectenna (rectifying antenna).**

***Index Terms*—RF Harvesting, Rectenna, Adaptation d'impédance, IoT, Diodes Schottky.**

Introduction

Energy harvesting refers to the process of capturing and converting ambient energy from the surrounding environment into electrical power. Among us, various available energy sources are existing, such as thermal, kinetic, solar, and radiofrequency (RF). RF energy harvesting has emerged as a particularly promising solution for powering autonomous, low-power electronic devices without the need for conventional batteries or wired power supplies.

RF energy is available almost everywhere in the electromagnetic spectrum through everyday wireless technologies such as Wi-Fi routers, cellular base stations, television broadcast towers, and Bluetooth devices. Although the power density of these ambient RF signals is relatively low, recent advances in rectenna (rectifying antenna) design and ultra-low-power electronics have made it feasible to harvest sufficient energy for more and more applications, including wireless sensor networks, implantable medical devices, and Internet of Things (IoT) sensors.

A rectenna is the core component of any RF energy harvesting system. It consists of a receiving antenna coupled to a rectifying circuit, which converts the incoming alternating current (AC) RF signal into a usable direct current (DC) voltage. As illustrated in Figure 1, a complete RF energy harvesting chain typically includes a matching circuit, a voltage multiplier (rectifier), an energy storage element, and a microcontroller unit driving the target application. The overall performance of such a system is primarily characterized by its RF-to-DC power conversion efficiency (PCE), defined as :

$$\eta_{RF-DC} = \frac{P_{DC}}{P_{RF}} = \frac{V_{DC}^2/R_L}{P_{RF}} \tag{1}$$

where P_{RF} is the available input RF power, V_{DC} is the output DC voltage, and R_L is the load resistance. Maximizing this efficiency requires careful co-design of the antenna, the impedance matching network, and the rectifier topology.

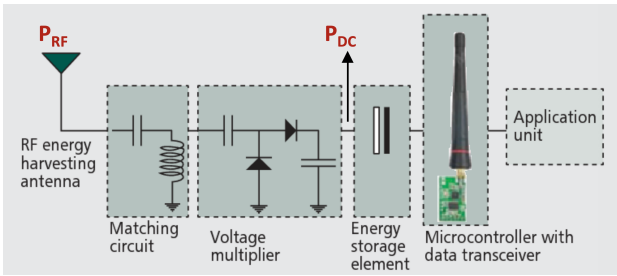

FIGURE 1. Block diagram of a complete RF energy harvesting system, from the receiving antenna (P_{RF}) to the application unit (P_{DC}).

The rectifier topology plays a critical role in determining both the conversion efficiency and the output voltage level. Figure 2 presents the three conventional rectenna topologies considered in the literature : the series topology (a), the shunt topology (b), and the single voltage doubler topology (c). In this study, the one-diode (series or shunt) and the two-diode (voltage doubler) configurations are designed, simulated, and experimentally compared.

The objective of this practical work is to design, simulate, and characterize two AC-to-DC converter topologies, a one-diode topology and a two-diode topology, for low-power RF energy harvesting applications. Analysis are carried out using the Keysight Advanced Design System (ADS) professional software, with operating frequencies selected within the 1.5–3 GHz range, covering widely used ISM bands such as 2.45 GHz. Both lumped-element (LC) and distributed impedance (microstrip line) matching strategies are investigated and compared.

The report is structured as follows. Section I presents the choice of application, operating frequency, and Schottky diode. Section II details the design and simulation of the one-diode rectifier topology, including impedance matching optimization. Section **??** extends this

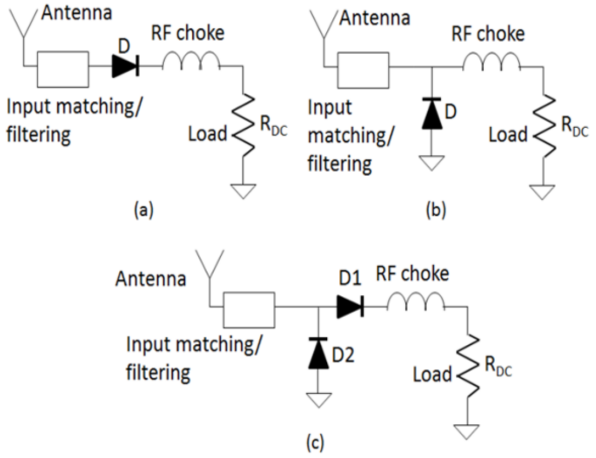

FIGURE 2. Conventional rectenna topologies : (a) series ; (b) shunt ; (c) single voltage doubler.

analysis to the two-diode configuration. Section **??** describes the PCB design, fabrication process, and experimental measurements. Finally, a comparative discussion and conclusion are provided, assessing the suitability of each topology for the targeted low-power application.

I. Fondements Théoriques

I-A L'équation de Friis et la puissance reçue

La puissance captée par notre antenne réceptrice dépend directement de la distance et des gains des antennes, et peut être modélisée par l'équation des télécommunications de Friis (Équation 2) :

$$P_r = P_t + G_t + G_r + 20\log_{10}\left(\frac{\lambda}{4\pi d}\right) \tag{2}$$

Où P_r est la puissance reçue en dBm, λ la longueur d'onde en mètres, et d la distance de la source en mètres.

I-B Efficacité de conversion RF-DC

L'élément critique du système est la *rectenna* (composée de l'antenne et du circuit redresseur). Le rendement global η dépend fortement de la puissance RF incidente à l'entrée de la diode Schottky :

$$\eta = \frac{P_{DC}}{P_{RF_in}} \times 100 \tag{3}$$

II. Implémentation et Résultats

II-A Comparatif des Diodes

Pour maximiser le rendement RF-DC à très faible puissance, nous avons comparé différentes diodes Schottky. Le package `booktabs` permet d'illustrer ces résultats clairement (Tableau I).

TABLE I
CARACTÉRISTIQUES DES DIODES SCHOTTKY TESTÉES

Diode	(I_s)	(R_s)	(C_j)	(F)
HSMS-2820	22 nA	6 Ω	0,7 pF	up to 4 GHz
HSMS-2850	3000 nA	25 Ω	0,18 pF	below 1,5 GHz
HSMS-2860	50 nA	6 Ω	0,18 pF	up to 5,8 GHz

II-B Script de calcul de bilan de liaison

Afin d'automatiser nos calculs de densité de puissance, nous avons développé un petit script Python.

Listing 1. Conversion dBm en Watts

```python
def dbm_to_watts(dbm_value):
    # Convertit une puissance reçue en dBm
        vers des Watts
    milliwatts = 10 ** (dbm_value / 10)
    watts = milliwatts / 1000
    return watts

puissance_rx = -20 # dBm
print(f"Puissance : {dbm_to_watts(puissance_rx
    )} W")
```