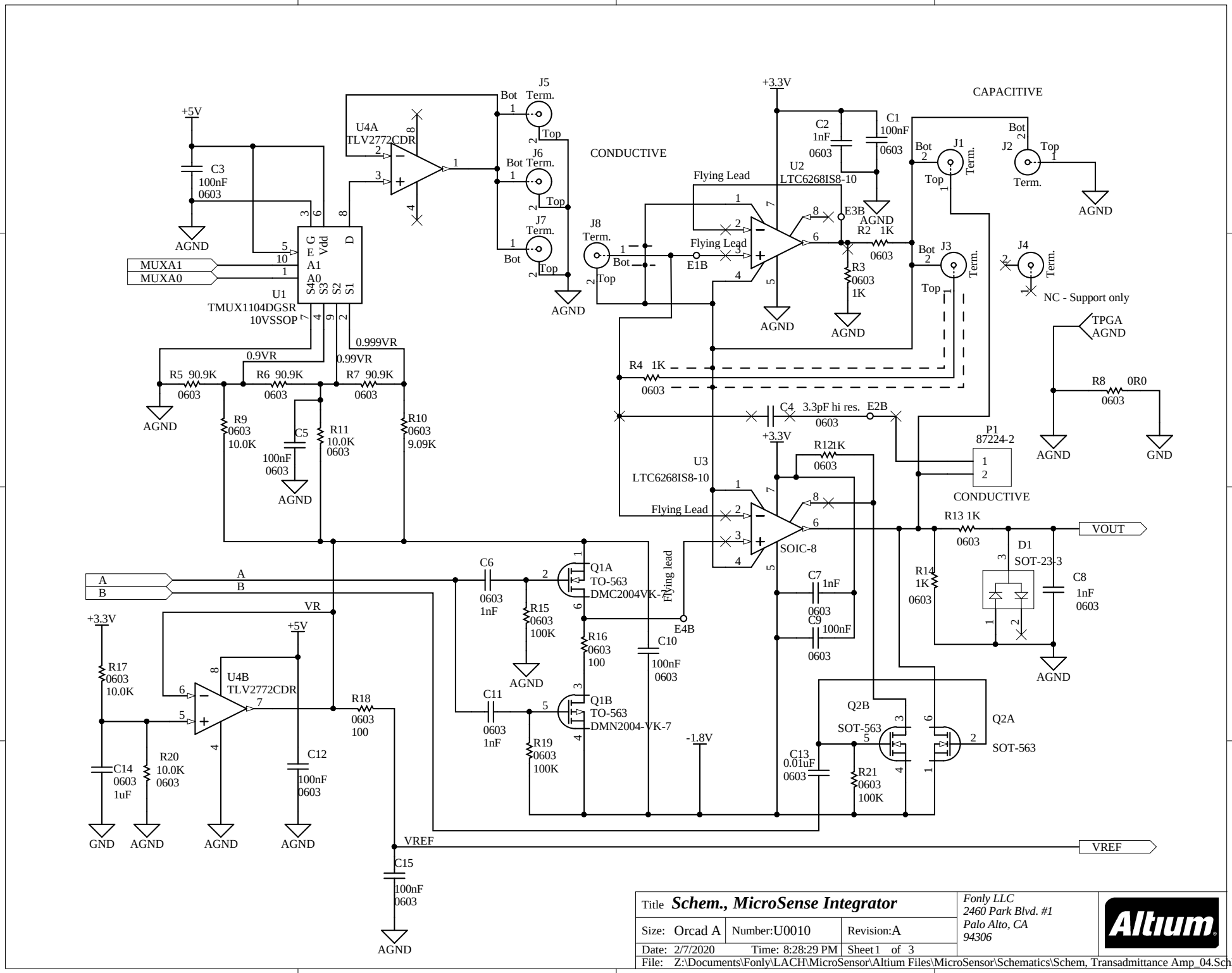
Flying Lead
+5V
C3
100nF
0603
AGND
U4A
TLV2772CDR
J5
Term.
Bot
Top
J6
J7
J8
MUXA1
MUXA0
U1
TMUX1104DGSR
10VSSOP
0.999VR
0.9VR
0.99VR
R5 90.9K
R6 90.9K
R7 90.9K
R9
0603
10.0K
C5
100nF
R11
10.0K
R10
0603
9.09K
CONDUCTIVE
+3.3V
C2
1nF
C1
100nF
U2
LTC6268IS8-10
E3B
R2 1K
R3
0603
1K
E1B
CAPACITIVE
J1
J2
J3
J4
NC - Support only
TPGA
R8 0R0
R4 1K
C4 3.3pF hi res.
E2B
P1
87224-2
U3
LTC6268IS8-10
R12 1K
SOIC-8
R13 1K
VOUT
D1
SOT-23-3
R14
1K
C8
1nF
C6
1nF
Q1A
TO-563
DMC2004VK-7
R15
100K
R16
100
C10
100nF
E4B
C7
1nF
C9
100nF
Q1B
DMN2004-VK-7
C11
1nF
R19
100K
-1.8V
Q2B
SOT-563
Q2A
SOT-563
C13
0.01uF
R21
100K
A
B
VR
R17
10.0K
U4B
TLV2772CDR
R18
100
C14
1uF
R20
10.0K
C12
100nF
GND
VREF
C15
100nF
Title Schem., MicroSense Integrator
Size: Orcad A
Number: U0010
Revision: A
Date: 2/7/2020
Time: 8:28:29 PM
Sheet 1 of 3
File: Z:\Documents\Fonly\LACH\MicroSensor\Altium Files\MicroSensor\Schematics\Schem, Transadmittance Amp_04.SchDoc
Fonly LLC
2460 Park Blvd. #1
Palo Alto, CA
94306
Altium

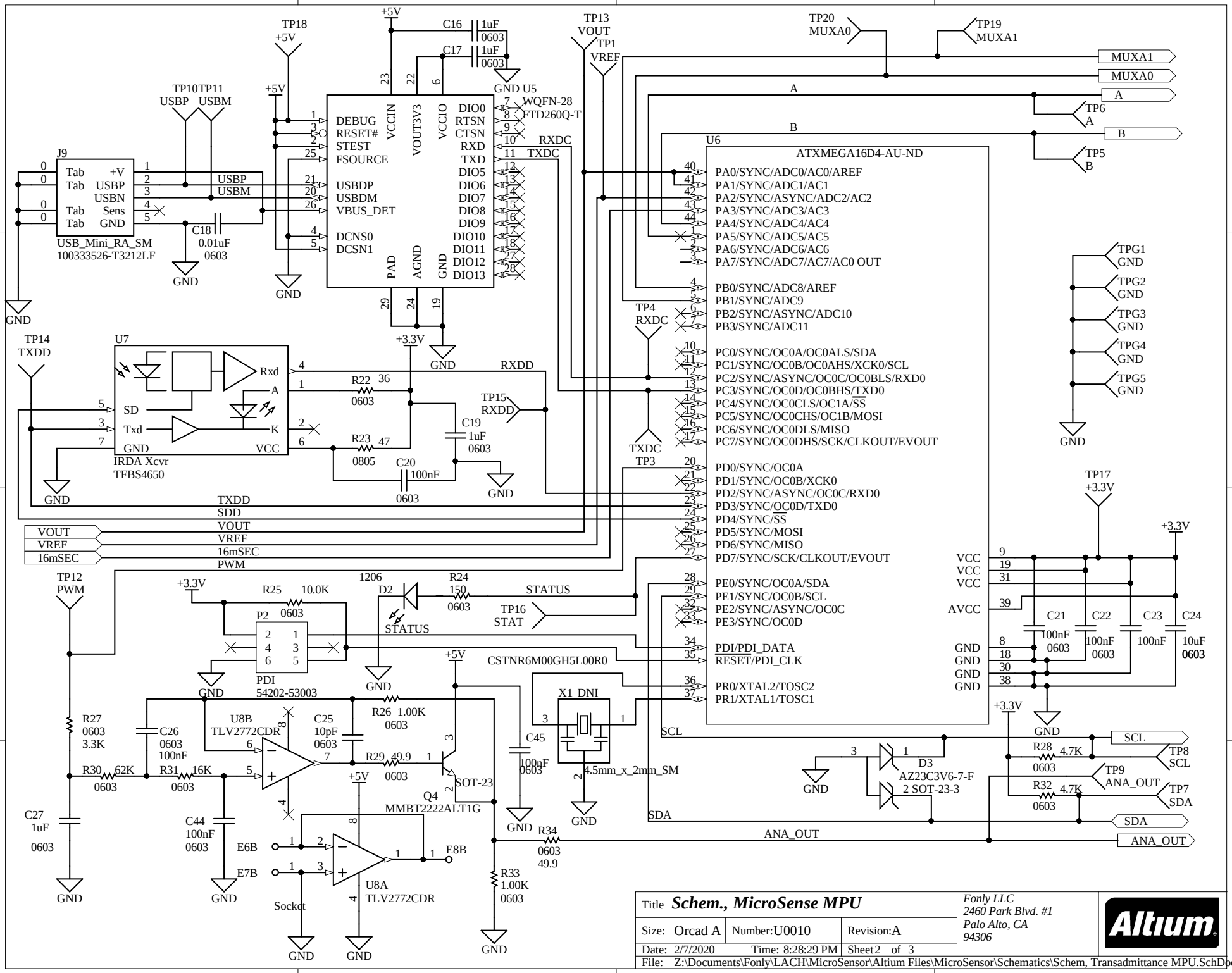
U5
WQFN-28
FTD260Q-T
DEBUG
RESET#
STEST
FSOURCE
USBDP
USBDM
VBUS_DET
DCNS0
DCSN1
VCCIN
VOUT3V3
VCCIO
DIO0
RTSN
CTSN
RXD
TXD
DIO5
DIO6
DIO7
DIO8
DIO9
DIO10
DIO11
DIO12
DIO13
PAD
AGND
GND
C16 1uF 0603
C17 1uF 0603
TP18 +5V
TP10 USBP
TP11 USBM
J9
USB_Mini_RA_SM
100333526-T3212LF
C18 0.01uF 0603
TP13 VOUT
TP1 VREF
TP20 MUXA0
TP19 MUXA1
MUXA1
MUXA0
A
B
TP6 A
TP5 B
U6
ATXMEGA16D4-AU-ND
PA0/SYNC/ADC0/AC0/AREF
PA1/SYNC/ADC1/AC1
PA2/SYNC/ASYNC/ADC2/AC2
PA3/SYNC/ADC3/AC3
PA4/SYNC/ADC4/AC4
PA5/SYNC/ADC5/AC5
PA6/SYNC/ADC6/AC6
PA7/SYNC/ADC7/AC7/AC0 OUT
PB0/SYNC/ADC8/AREF
PB1/SYNC/ADC9
PB2/SYNC/ASYNC/ADC10
PB3/SYNC/ADC11
PC0/SYNC/OC0A/OC0ALS/SDA
PC1/SYNC/OC0B/OC0AHS/XCK0/SCL
PC2/SYNC/ASYNC/OC0C/OC0BLS/RXD0
PC3/SYNC/OC0D/OC0BHS/TXD0
PC4/SYNC/OC0CLS/OC1A/SS
PC5/SYNC/OC0CHS/OC1B/MOSI
PC6/SYNC/OC0DLS/MISO
PC7/SYNC/OC0DHS/SCK/CLKOUT/EVOUT
PD0/SYNC/OC0A
PD1/SYNC/OC0B/XCK0
PD2/SYNC/ASYNC/OC0C/RXD0
PD3/SYNC/OC0D/TXD0
PD4/SYNC/SS
PD5/SYNC/MOSI
PD6/SYNC/MISO
PD7/SYNC/SCK/CLKOUT/EVOUT
PE0/SYNC/OC0A/SDA
PE1/SYNC/OC0B/SCL
PE2/SYNC/ASYNC/OC0C
PE3/SYNC/OC0D
PDI/PDI_DATA
RESET/PDI_CLK
PR0/XTAL2/TOSC2
PR1/XTAL1/TOSC1
VCC
AVCC
GND
TP4 RXDC
TXDC TP3
TPG1 GND
TPG2 GND
TPG3 GND
TPG4 GND
TPG5 GND
TP17 +3.3V
C21 100nF 0603
C22 100nF 0603
C23 100nF
C24 10uF 0603
TP14 TXDD
U7
IRDA Xcvr
TFBS4650
Rxd
A
SD
Txd
K
GND
VCC
R22 36 0603
R23 47 0805
C19 1uF 0603
C20 100nF 0603
TP15 RXDD
RXDD
TXDD
SDD
VOUT
VREF
16mSEC
PWM
TP12 PWM
R25 10.0K 0603
P2
PDI
54202-53003
D2 1206
STATUS
R24 150 0603
TP16 STAT
CSTNR6M00GH5L00R0
X1 DNI
4.5mm_x_2mm_SM
C45 100nF 0603
R26 1.00K 0603
R27 0603 3.3K
C26 0603 100nF
U8B TLV2772CDR
C25 10pF 0603
R29 49.9 0603
Q4 MMBT2222ALT1G
SOT-23
R30 62K 0603
R31 16K 0603
C27 1uF 0603
C44 100nF 0603
E6B
E7B
E8B
Socket
U8A TLV2772CDR
R33 1.00K 0603
R34 0603 49.9
SCL
SDA
ANA_OUT
D3 AZ23C3V6-7-F
2 SOT-23-3
R28 4.7K 0603
R32 4.7K 0603
TP8 SCL
TP9 ANA_OUT
TP7 SDA
Title Schem., MicroSense MPU
Size: Orcad A
Number: U0010
Revision: A
Date: 2/7/2020
Time: 8:28:29 PM
Sheet 2 of 3
File: Z:\Documents\Fonly\LACH\MicroSensor\Altium Files\MicroSensor\Schematics\Schem, Transadmittance MPU.SchDoc
Fonly LLC
2460 Park Blvd. #1
Palo Alto, CA
94306
Altium

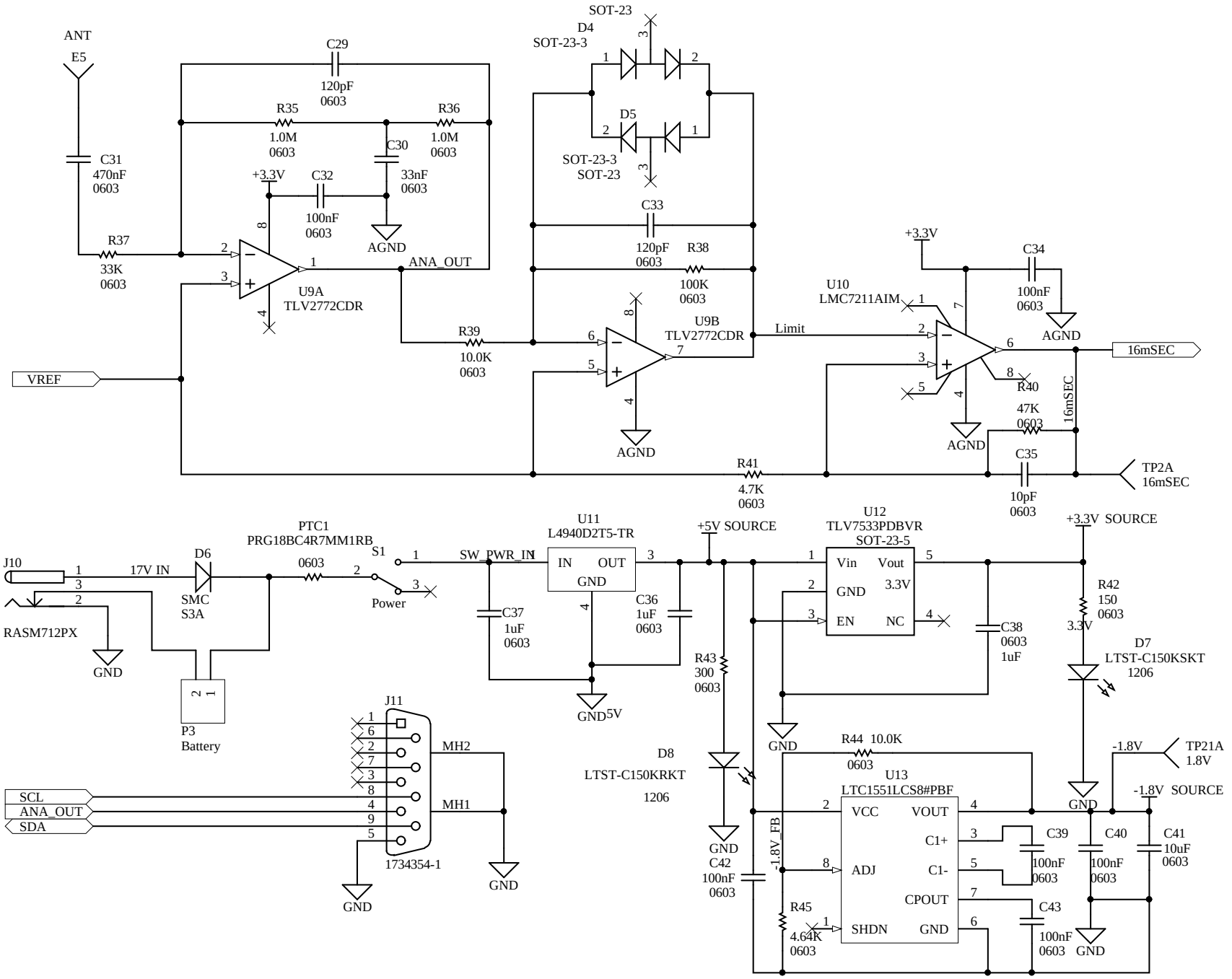

Title	***Schem., MicroSense Power***		*Fonly LLC* *2460 Park Blvd. #1* *Palo Alto, CA* *94306*
Size: Orcad A	Number:U0010	Revision:A	
Date: 2/7/2020	Time: 8:28:29 PM	Sheet 3 of 3	
File: Z:\Documents\Fonly\LACH\MicroSensor\Altium Files\MicroSensor\Schematics\Schem, Transadmittance PWR.SchDoc			