(Please write your Enrolment No. immediately) Enrolment No. _____

MID TERM EXAMINATION

B.TECH PROGRAMMES (UNDER THE AEGIS OF USICT)

4th Semester, April, 2024

Paper Code: EEC206 **Subject: Network Analysis and Systems**
Time: 1½Hrs. **Max. Marks: 30**

Note: Attempt Q.No.1 which is compulsory and any two more questions from remaining.

Q.No.	Question	Max. Marks	CO(s)
1. (a)	Define graph and incidence matrix.	2	
(b)	Find the laplace transform of F(t)= sinωt.	2	
(c)	For the current $i(t)= 5u(t)-3e^{-2t}$. Find I(s).	2	
(d)	Sketch the signal from the given expression $U(t-6)+U(t-4)$	2	
(e)	Find the expression for i(t) in the form of standard signals 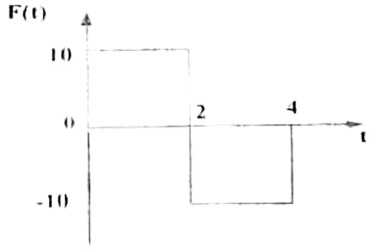	2	
2. (a)	Obtain the output voltage V_0 across x-y using mesh analysis in the network of the figure below 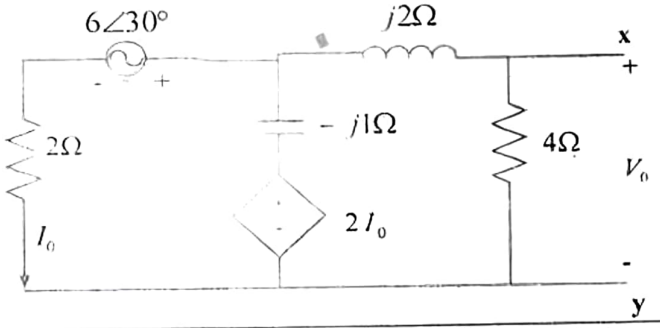	7	
(b)	Draw graph for the given circuit as shown in figure and find A. 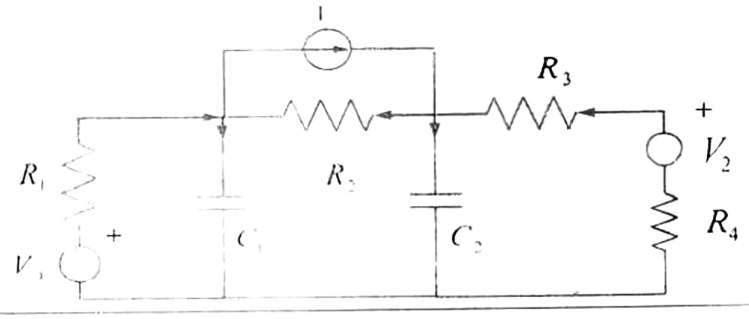	3	

Paper code - EEC - 206

8375818044

3 (a)	Obtain the laplace transform of the periodic waveform F(t) as shown in figure 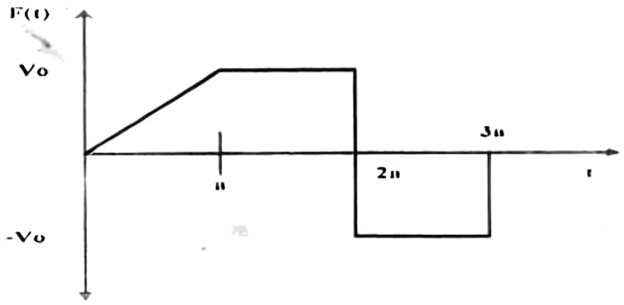	3	
(b)	The switch in circuit of the figure has been closed for a long time. It opens at t=0. Find $V_c(t)$ for t>0 using classical method 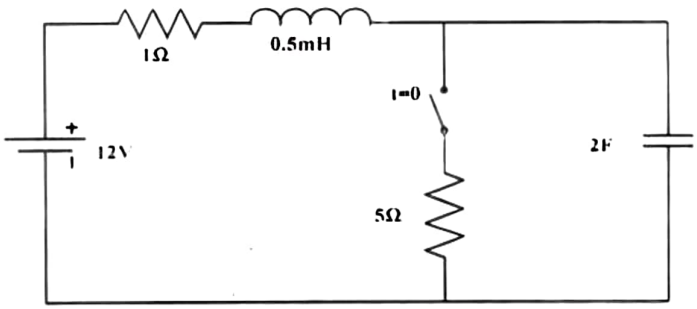	7	
4. (a)	Find the expression for i(t), $v_R(t)$, and $v_L(t)$ for the series RL circuit	5	
(b)	Draw the oriented graph of a network with fundamental cutest matrix as shown below with links as [5,6,7]	8	

Twigs Links

1	2	3	4	5	6	7
1	0	0	0	-1	0	0
0	1	0	0	1	0	1
0	0	1	0	0	1	1
0	0	0	1	0	1	0