ColorClock

a project by

Laqomorphic Constructs

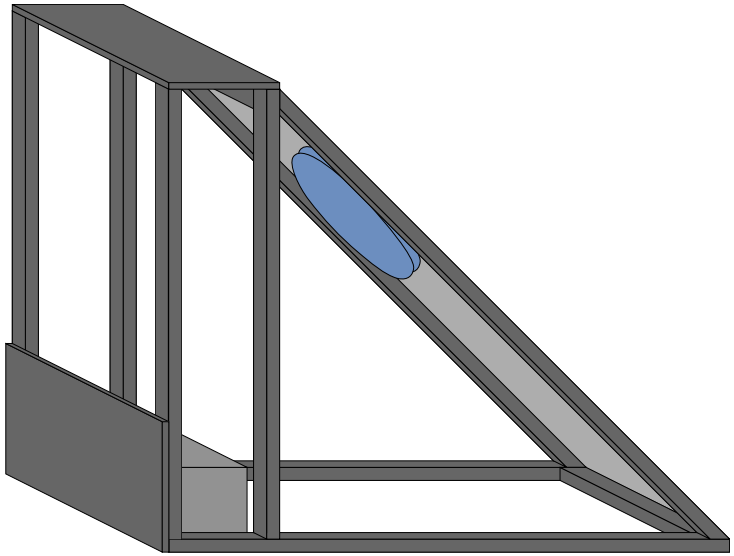

ISOMETRIC VIEW

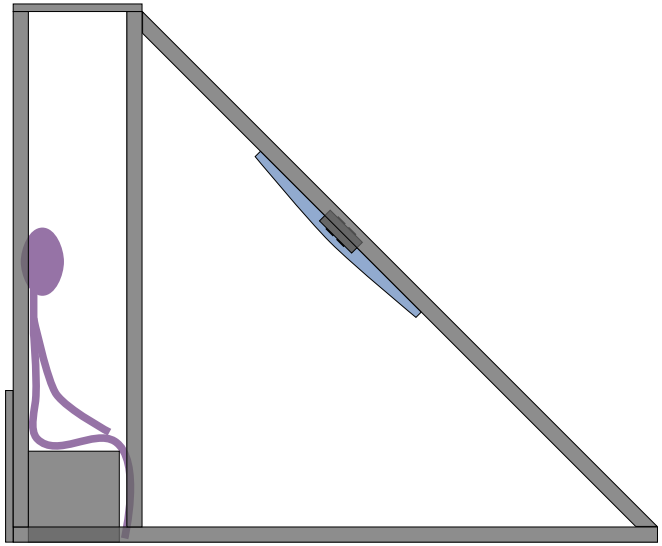

SIDE VIEW

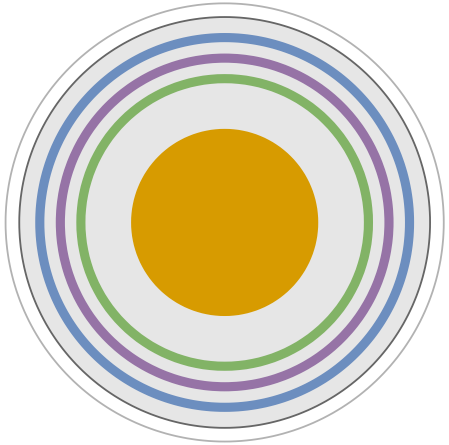

LIGHT DISPLAY

Introduction

Pigment Primary Colors: Red, Yellow, Blue

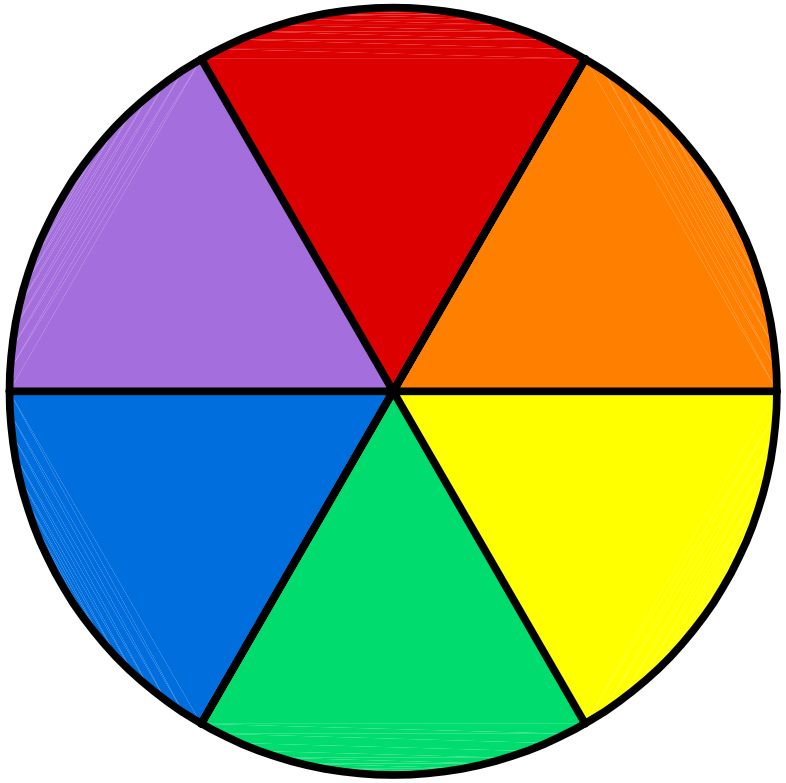

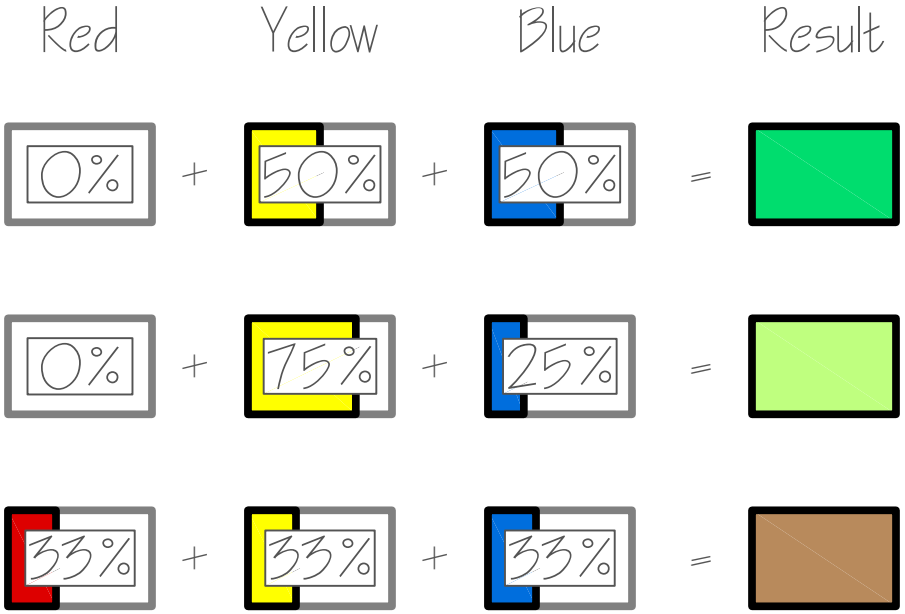

PIGMENT COLOR MIXING	
LAGOMORPHIC CONSTRUCTS	
AUGUST 2024	REV -

Light Primary Colors: Red, Green, Blue

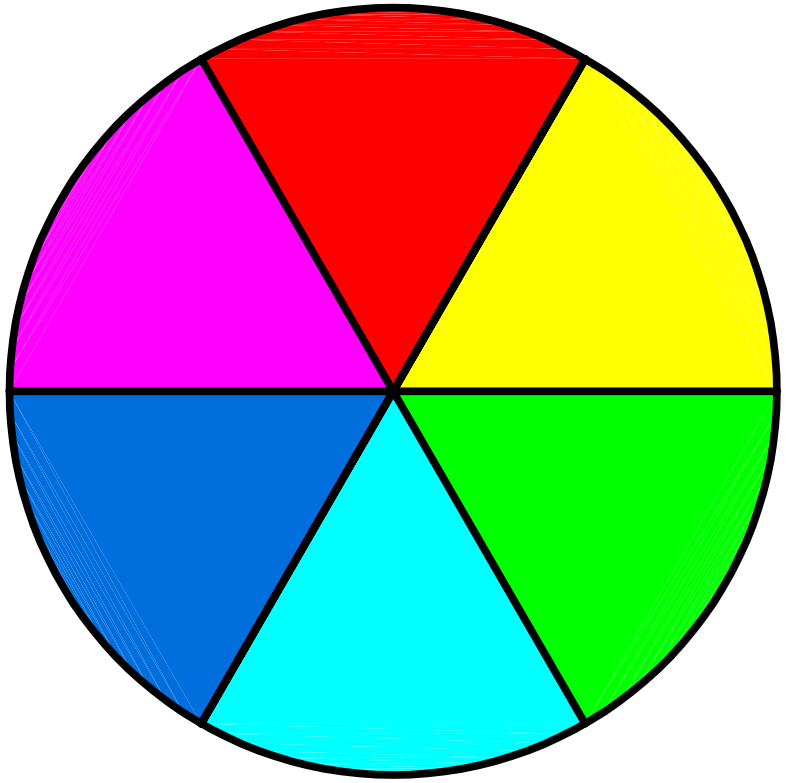

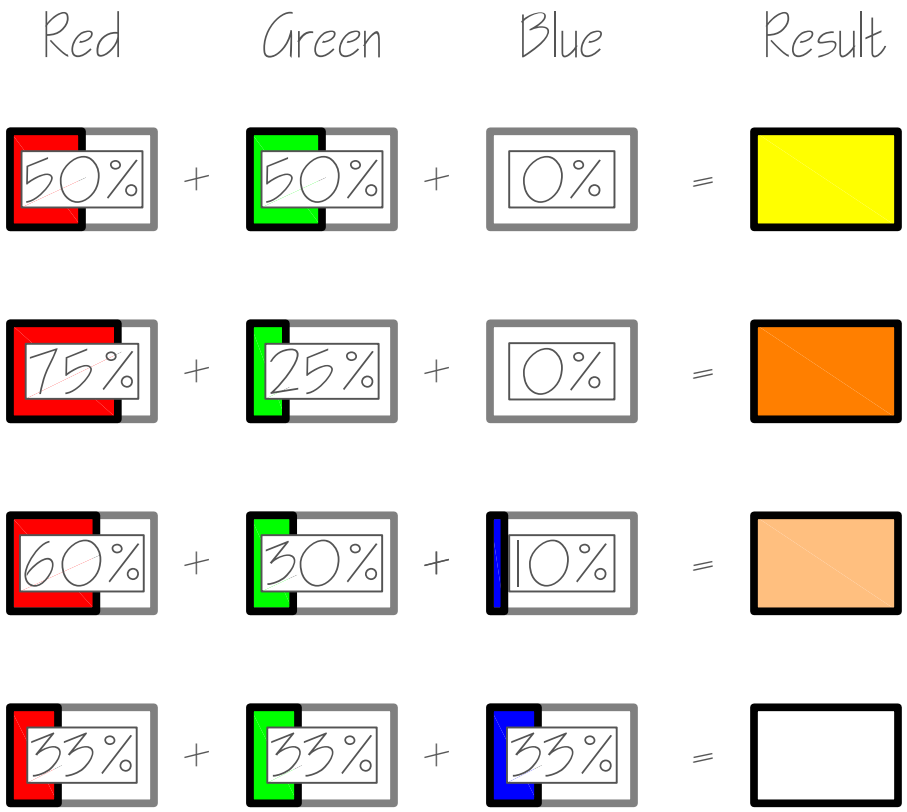

LIGHT COLOR MIXING	
LAGOMORPHIC CONSTRUCTS	
AUGUST 2024	REV -

RGB LED Common Anode = Shared Ground

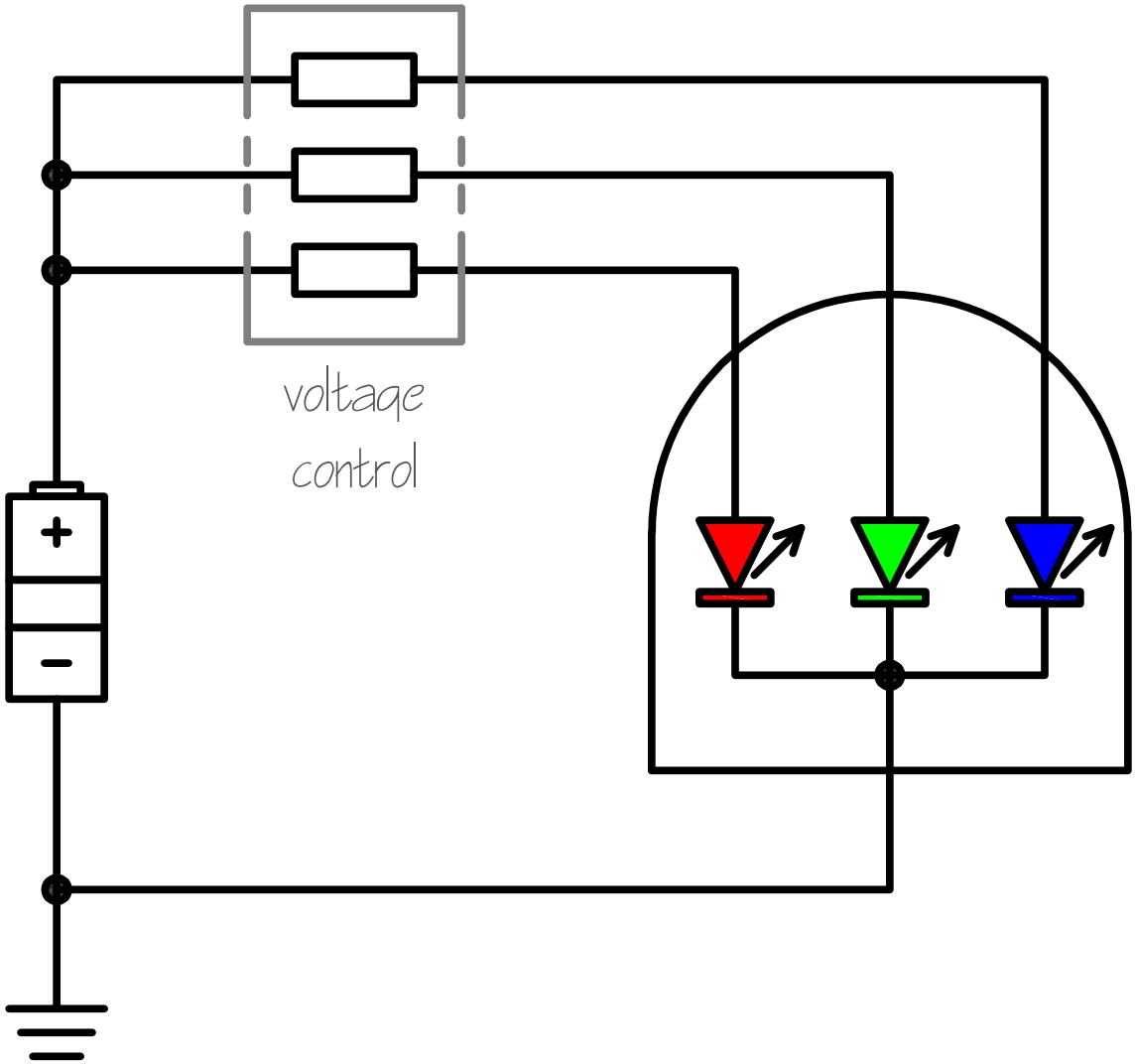

COMMON ANODE RGB LED	
LAGOMORPHIC CONSTRUCTS	
AUGUST 2024	REV -

1 Part Blue, 2 Parts Green, 4 Parts Red = Light Orange

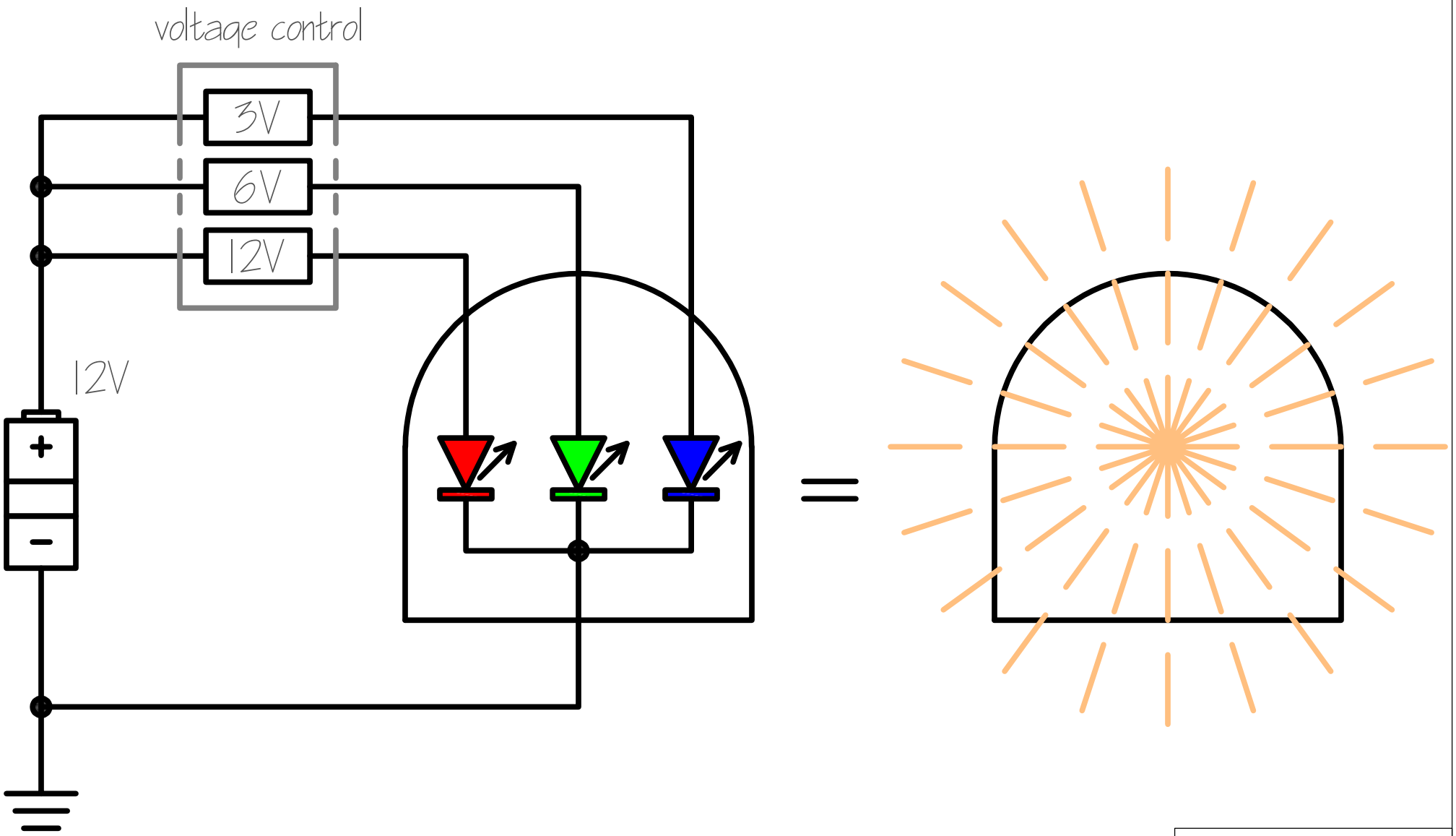

RGB LED COLOR MIXING

LAGOMORPHIC CONSTRUCTS

AUGUST 2024

REV -

Level Shifter Modifies Output Voltage

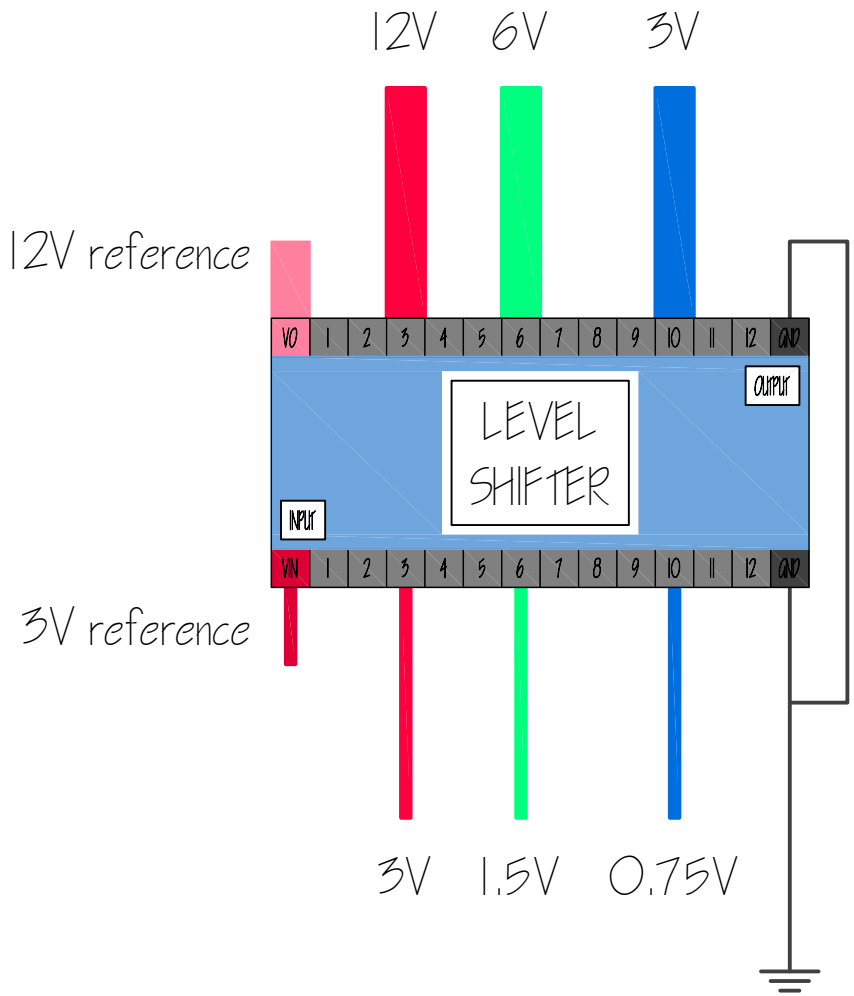

LEVEL SHIFTER	
LAGOMORPHIC CONSTRUCTS	
AUGUST 2024	REV -

ColorClock Hardware

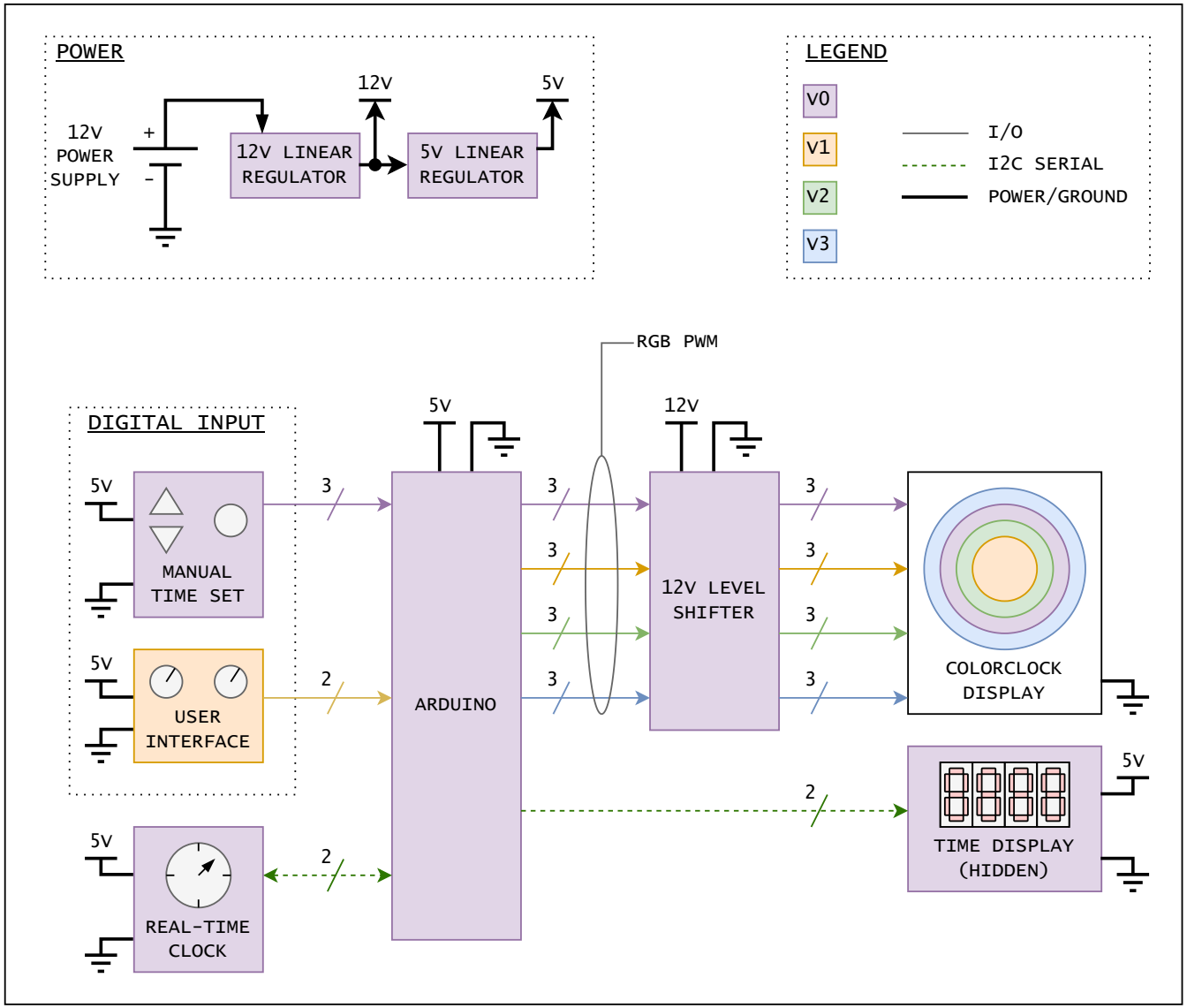
POWER
12V POWER SUPPLY
+
-
12V LINEAR REGULATOR
12V
5V LINEAR REGULATOR
5V
LEGEND
V0
V1
V2
V3
I/O
I2C SERIAL
POWER/GROUND
RGB PWM
DIGITAL INPUT
5V
MANUAL TIME SET
USER INTERFACE
REAL-TIME CLOCK
3
2
ARDUINO
12V LEVEL SHIFTER
COLORCLOCK DISPLAY
TIME DISPLAY (HIDDEN)

Level Shifter Increases Arduino Analog Output

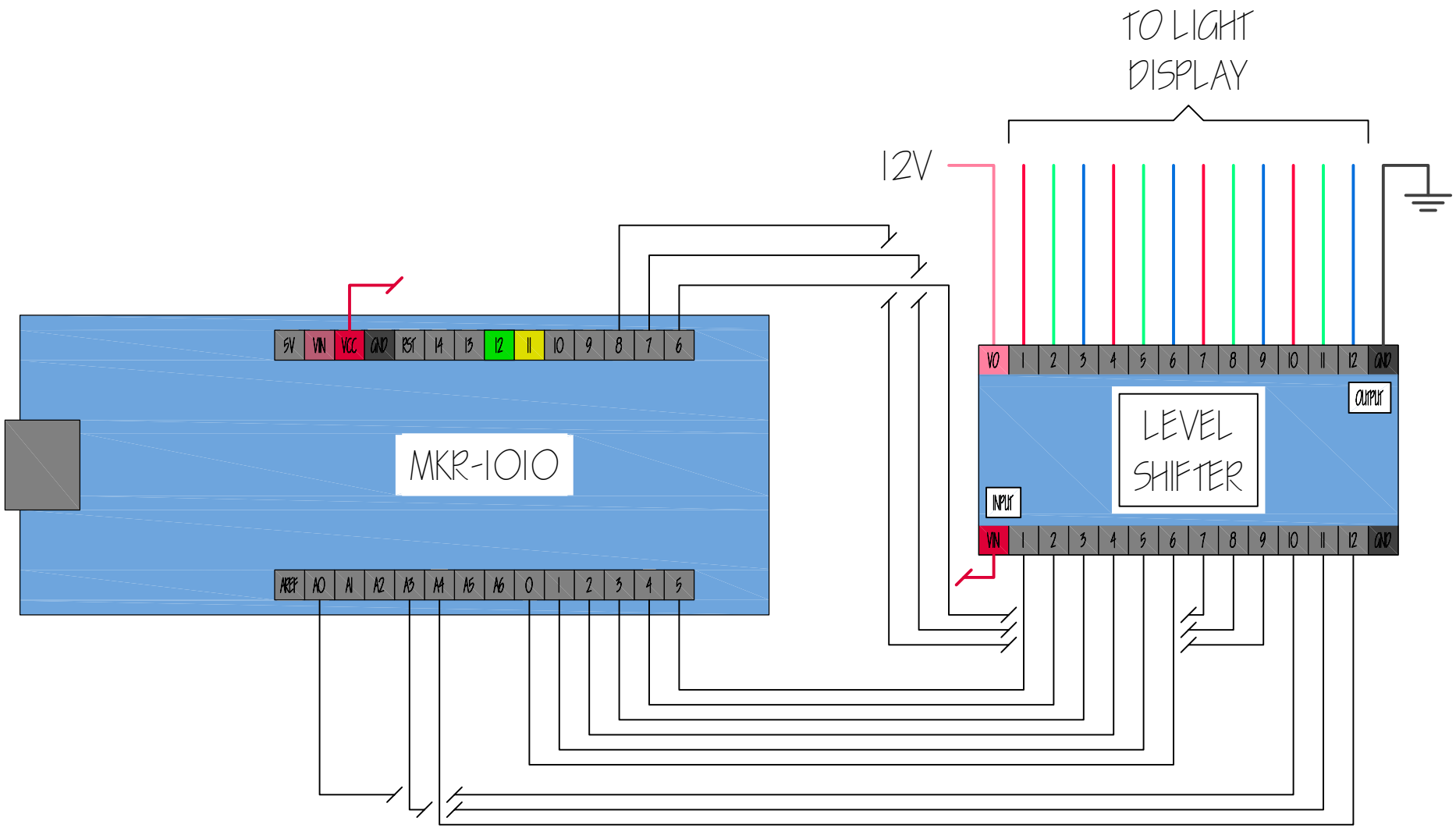

LEVEL SHIFTER CIRCUIT	
LAGOMORPHIC CONSTRUCTS	
AUGUST 2024	REV -

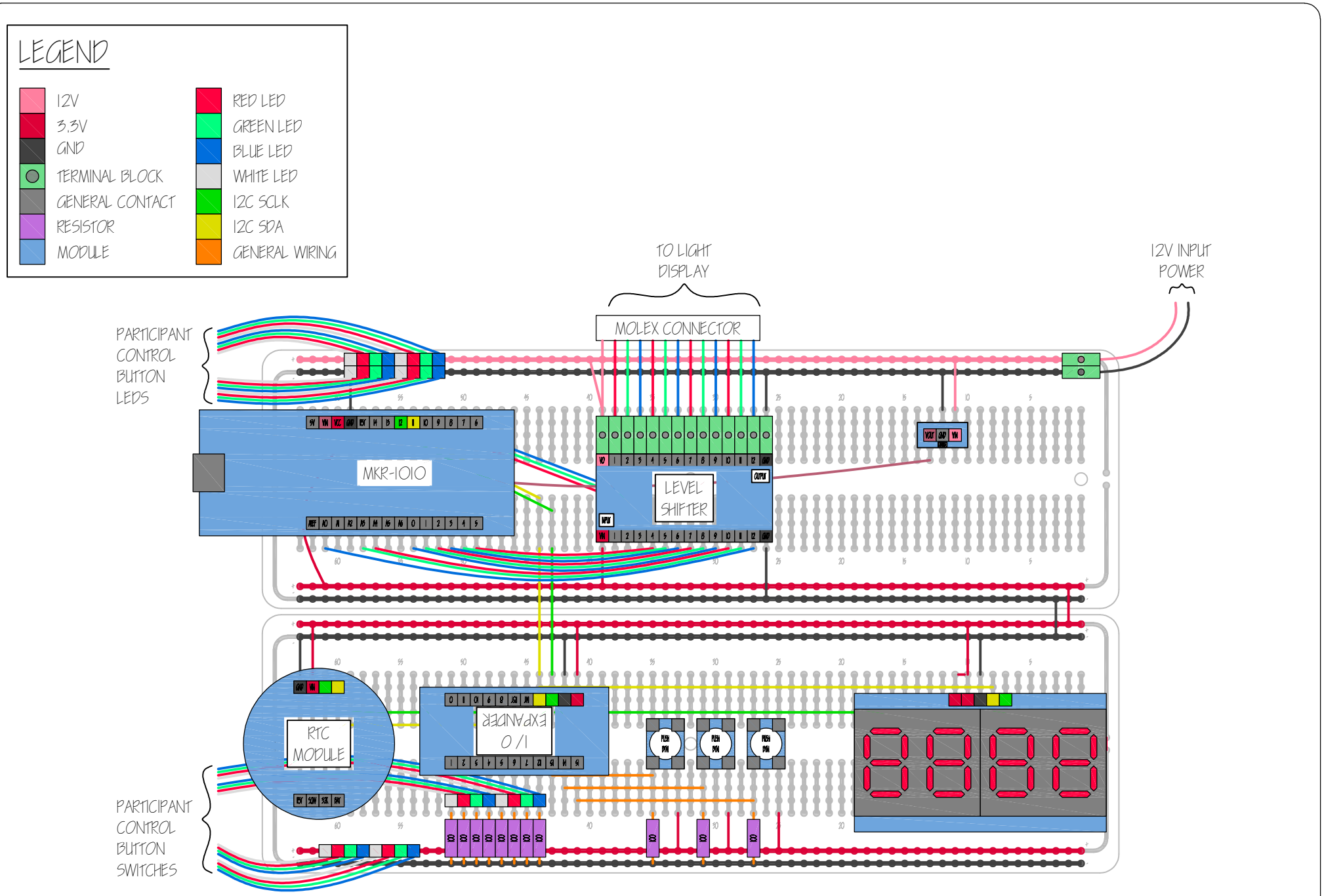

CIRCUIT BOARD LAYOUT

CIRCUIT BOARD LAYOUT	
LAGOMORPHIC CONSTRUCTS	
JULY 2024	REV -

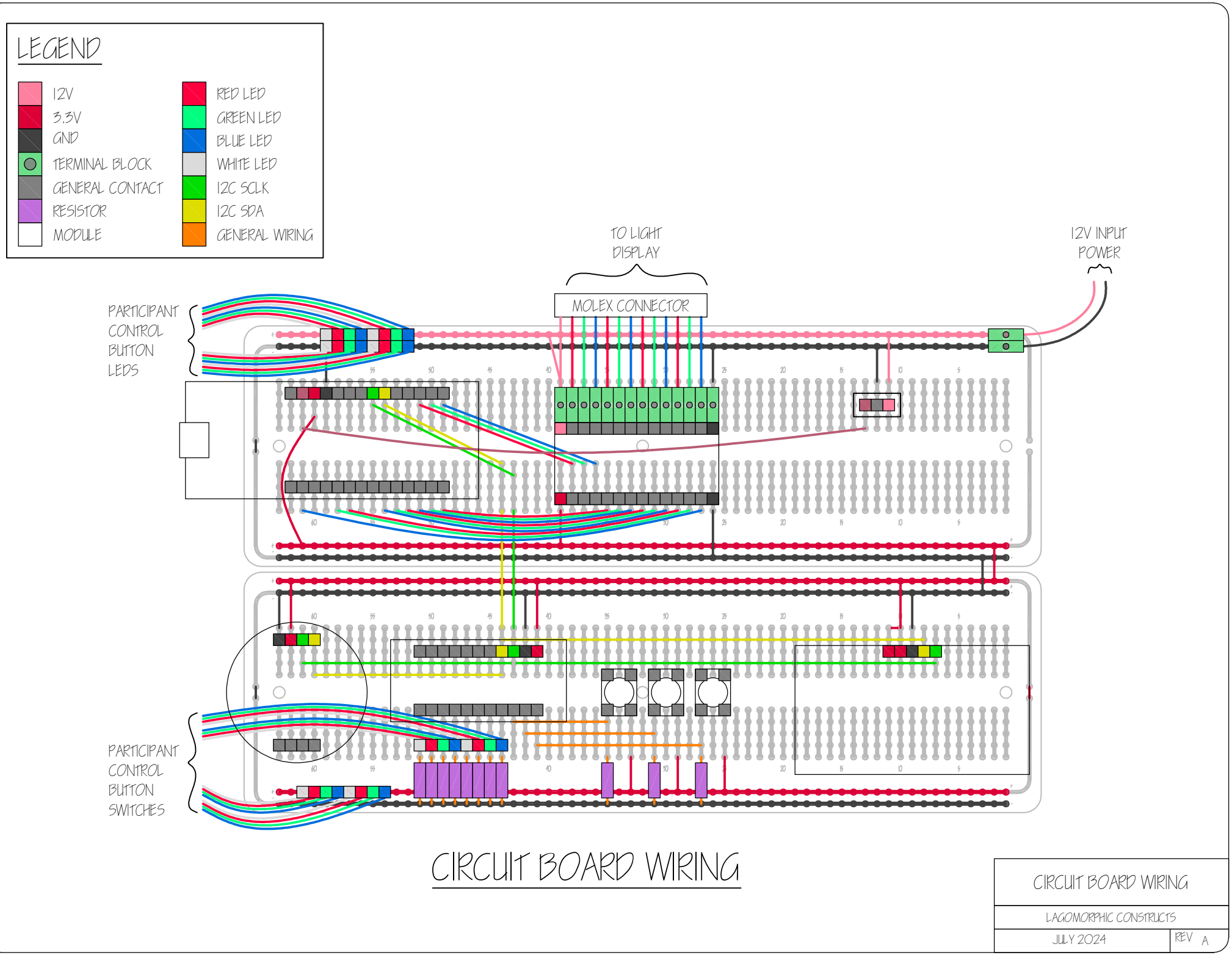
LEGEND
12V
3.3V
GND
TERMINAL BLOCK
GENERAL CONTACT
RESISTOR
MODULE
RED LED
GREEN LED
BLUE LED
WHITE LED
I2C SCLK
I2C SDA
GENERAL WIRING
TO LIGHT DISPLAY
MOLEX CONNECTOR
12V INPUT POWER
PARTICIPANT CONTROL BUTTON LEDS
PARTICIPANT CONTROL BUTTON SWITCHES
CIRCUIT BOARD WIRING
CIRCUIT BOARD WIRING
LAGOMORPHIC CONSTRUCTS
JULY 2024
REV A