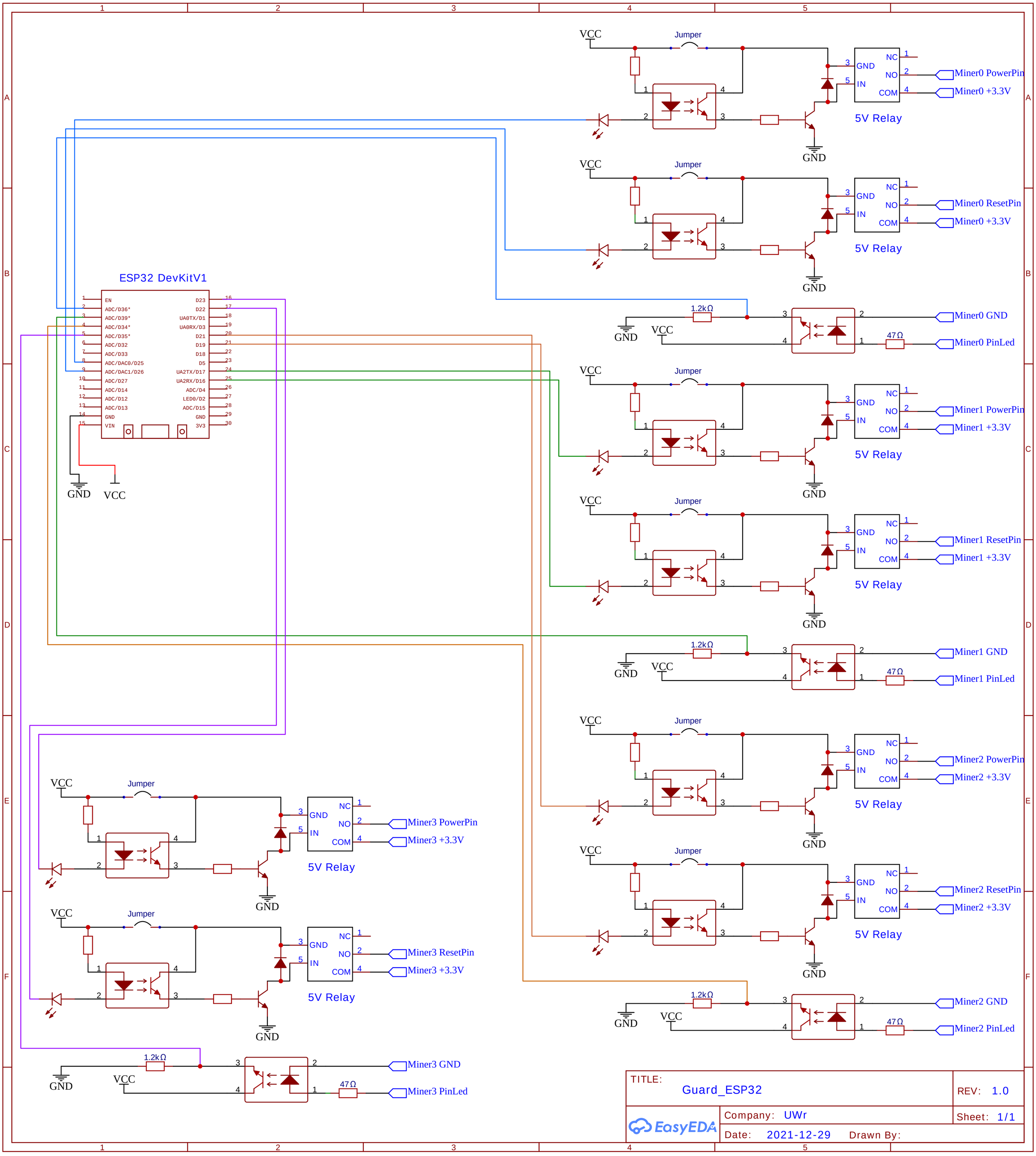
ESP32 DevKitV1
EN
ADC/D36*
ADC/D39*
ADC/D34*
ADC/D35*
ADC/D32
ADC/D33
ADC/DAC0/D25
ADC/DAC1/D26
ADC/D27
ADC/D14
ADC/D12
ADC/D13
GND
VIN
D23
D22
UA0TX/D1
UA0RX/D3
D21
D19
D18
D5
UA2TX/D17
UA2RX/D16
ADC/D4
LED0/D2
ADC/D15
GND
3V3
GND
VCC
Jumper
GND
IN
NC
NO
COM
5V Relay
Miner0 PowerPin
Miner0 +3.3V
Miner0 ResetPin
Miner0 +3.3V
1.2kΩ
47Ω
Miner0 GND
Miner0 PinLed
Miner1 PowerPin
Miner1 +3.3V
Miner1 ResetPin
Miner1 +3.3V
Miner1 GND
Miner1 PinLed
Miner2 PowerPin
Miner2 +3.3V
Miner2 ResetPin
Miner2 +3.3V
Miner2 GND
Miner2 PinLed
Miner3 PowerPin
Miner3 +3.3V
Miner3 ResetPin
Miner3 +3.3V
Miner3 GND
Miner3 PinLed
TITLE:
Guard_ESP32
REV: 1.0
Company: UWr
Sheet: 1/1
Date: 2021-12-29
Drawn By:
EasyEDA