BESS SYSTEM SUMMARY	
POI NAMEPLATE	300 MW / 600 MWH
BESS MANUFACTURER / MODEL	CATL / ENERX
BESS UNIT SPECS	5.324 MWH, 2.662 MW, 1331 VDC, 2000A, 0.5C
PCS MANUFACTURER / MODEL	CATL / EH-5000-HB-UD-US-34.5
PCS UNIT SPECS	5.5 MVA, 34.5 KV-690 V, 92A-4604 A, 1040-1500VDC, 5612ADC
BESS QUANTITY / TOTAL MW	112 / 298.187 MW
PCS QUANTITY / TOTAL MVA	56 / 308.000 MVA
PCS TO BESS RATIO	1:2
FEEDER CONFIGURATION / MW / AMPS	(4) PCS, (8) BESS PER FEEDER / 21.299 MW / 368 A
FEEDER QUANTITY PER BREAKER / MW / AMPS	(2) FEEDERS PER BREAKER / 42.598 MW / 736 A
FEEDER QUANTITY PER XFMR / MW / AMPS	(7) FEEDERS PER XFMR / 149.094 MW / 2576 A
AUX POWER	30KW PER PCS, 20KW PER PCS, 1960 KW PER SYSTEM

MV CABLE SUMMARY	
MV1	
MV2	
MV3	

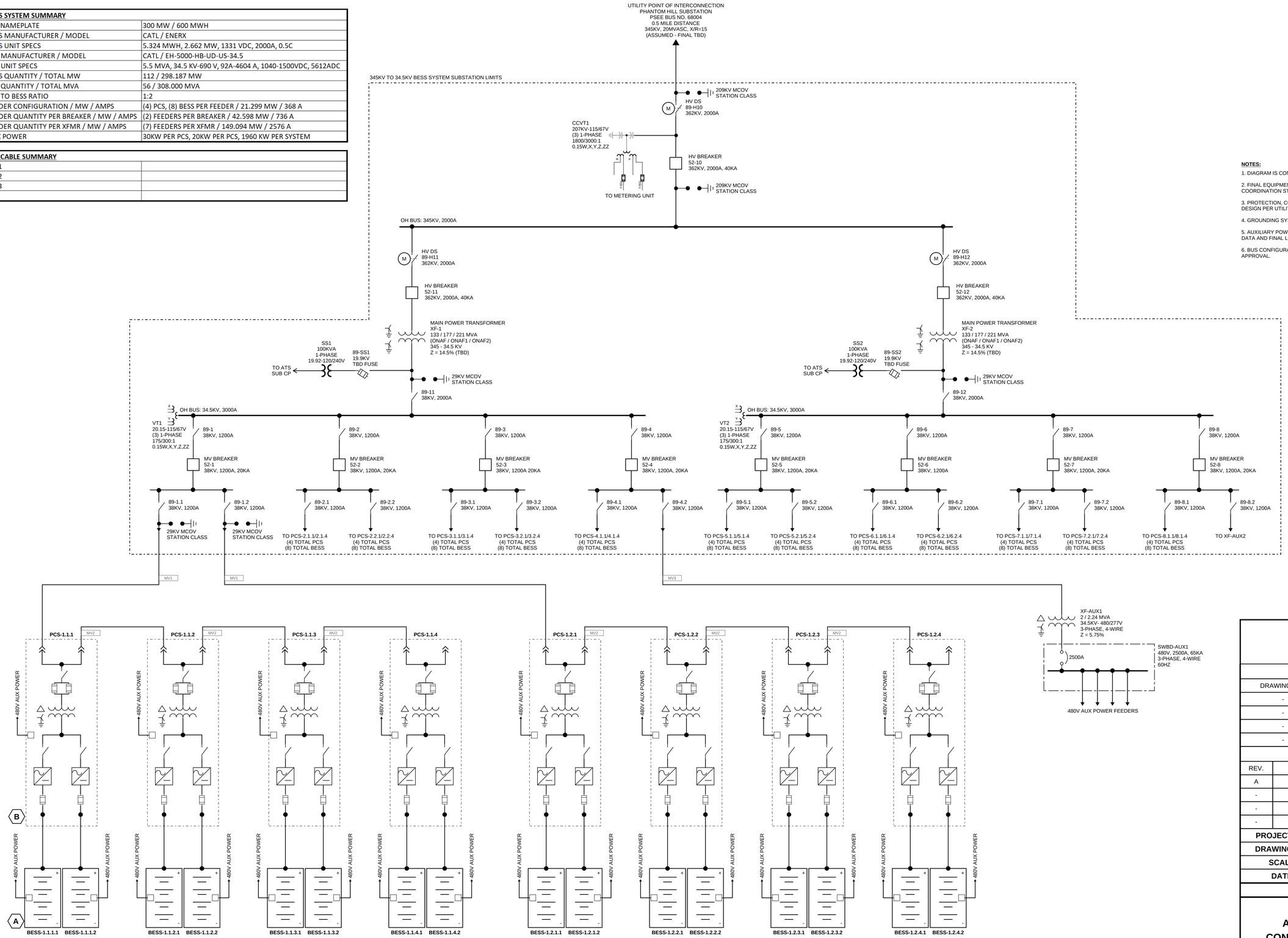

LEGEND:

- DISCONNECT SWITCH
- TRANSFORMER
- PAD MOUNTED CIRCUIT BREAKER
- FUSE
- AC-DC INVERTER
- SKID LIMITS

NOTES:

1. DIAGRAM IS CONCEPTUAL AND FOR PRELIMINARY DESIGN ONLY.
2. FINAL EQUIPMENT RATINGS SUBJECT TO SHORT-CIRCUIT, LOAD FLOW, AND COORDINATION STUDIES.
3. PROTECTION, CONTROL, AND METERING NOT SHOWN; TO BE DEFINED IN DETAILED DESIGN PER UTILITY REQUIREMENTS.
4. GROUNDING SYSTEM TO BE DESIGNED PER IEEE AND UTILITY STANDARDS.
5. AUXILIARY POWER SYSTEM CONFIGURATION AND SIZING SUBJECT TO MANUFACTURER DATA AND FINAL LOAD CALCULATIONS.
6. BUS CONFIGURATIONS AND INTERCONNECTION ARRANGEMENT SUBJECT TO UTILITY APPROVAL.

PRELIMINARY

REFERENCE DRAWINGS	
DRAWING NO.:	DESCRIPTION
-	-
-	-
-	-
-	-

REVISION HISTORY		
REV.	DATE	DESCRIPTION
A	-	W O R K I N G
-	-	-
-	-	-
-	-	-

PROJECT NO.:	**00008_2026_01**
DRAWING NO.:	**E-102**
SCALE:	**NTS**
DATE:	**02/09/2026**

TITLE

ANSON 300MW BESS PROJECT
CONCEPTUAL SINGLE LINE DIAGRAM