62nd International Astronautical Congress, Cape Town, SA. Copyright ©2011 by Surrey Satellite Technology Ltd. All rights reserved.

IAC-11-B4.6B.8

STRAND-1: USE OF A $500 SMARTPHONE AS THE CENTRAL AVIONICS OF A NANOSATELLITETE

Shaun Kenyon
Surrey Satellite Technology Ltd. (SSTL), Guildford, Surrey, United Kingdom, s.kenyon@sstl.co.uk

Dr Christopher Bridges
Surrey Space Centre (SSC), University of Surrey, Guildford, Surrey, United Kingdom, c.p.bridges@surrey.ac.uk

Doug Liddle, Bob Dyer, James Parsons, Mark Pollard, David Feltham, Rupert Taylor, Dale Mellor, Andrew Schofield, Rosie Linehan, Richard Long, Juan Fernandez, Haval Kadhem, Phil Davies, Jonathan Gebbie, Nick Holt
SSTL

Peter Shaw, Lourens Visagie, Theodoros Theodorou, Dr Vaios Lappas, Dr Craig Underwood
SSC

STRaND-1 is the first in a series of Surrey Satellite Technology Ltd. (SSTL)-Surrey Space Centre (SSC) collaborative satellites designed for the purpose of technology path finding for future commercial operations. It is the first time Surrey has entered the CubeSat field and differs from most CubeSats in that it will fly a modern Commercial Off The Shelf (COTS) Android smartphone as a payload, along with a suite of advanced technologies developed by the University of Surrey, and a payload from the University of Stellenbosch in South Africa. STRaND-1 is also different in that anyone (not just from the space engineering or space science community) will be eligible to fly their “app" in space, for free. STRaND-1 is currently being manufactured and tested by volunteers in their own free time, and will be ready for an intended launch in the first quarter of 2012.

This paper outlines the STRaND pathfinder programme philosophy which challenges some conventional space engineering practises, and describes the impact of those changes on the satellite development lifecycle. The paper then briefly describes the intent behind the design of STRaND-1, before presenting details on the design of the nanosatellite, focussing of the details of the innovative new technologies. These technologies include two different propulsion systems, an 802.11g WiFi experiment, a new VHF/UHF transceiver unit and a miniature 3-axis reaction wheel assembly. The novel processing setup (which includes the smartphone) is discussed in some detail, particularly the potential for outreach via the open source nature of Google's Android operating system. A step-through of the planned concept of operations is provided, which includes a possible rendezvous and inspection objective, demonstrating equal or improved capability compared to SNAP-1 with a reduced total system mass. Finally, data from the test campaign is presented and compared against other notable CubeSats known for their advanced capabilities. Rendered images of STRaND-1 are shown in Fig. I and are discussed later in the paper.

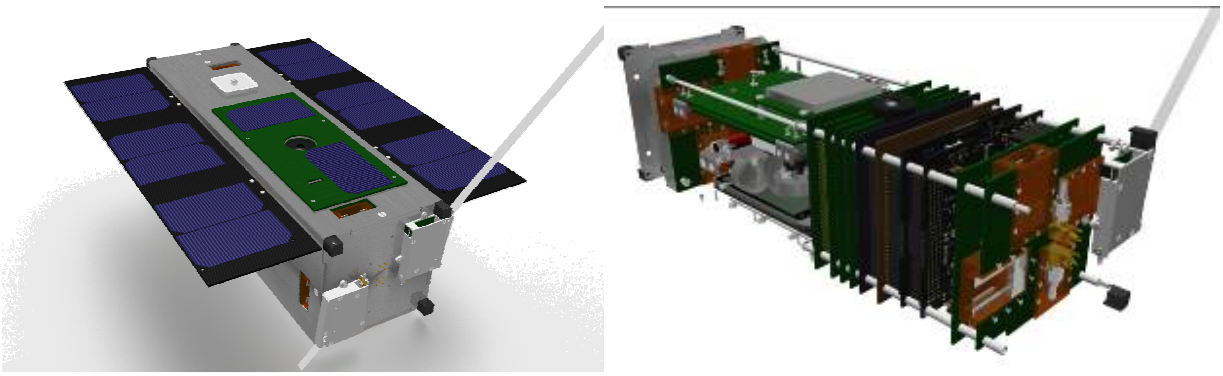

Figure I: Rendered Images of the STRaND-1 3U Satellite

I. INTRODUCTION

STRaND Programme Philosophy

The aims of the STRaND (Surrey Training, Research and Nanosatellite Development) programme are:

- To challenge both the current industry standard development processes and the traditional Surrey approach to discover new ways of designing, manufacturing and testing space hardware
- To demonstrate novel space technologies or the use of existing but modern terrestrial commercial-off-the-shelf (COTS) technologies in space.
- To provide a rapid hands-on training experience for less experienced engineers and academics in designing and building new satellite technologies.

The STRaND programme is intended to be a long-term arrangement between Surrey Satellite Technology Ltd (SSTL) and the Surrey Space Centre (SSC), with STRaND-1 the first of a long line of STRaND nanosatellite missions. It builds upon a similar programme a decade ago, which resulted in the highly successful SNAP-1 nanosatellite mission, launched in 2000 [1].

The STRaND programme has a unique funding arrangement with some limited support effort and all the hardware funded by SSTL and SSC. The vast majority of the manpower is volunteered by engineers from both organisations in their spare time. Additionally, there is no exchange of funds between SSTL and SSC. The engineers are motivated to be involved in STRaND-1 for their own education and the opportunity to 'own' and build a mission of significance.

The funding of hardware and additional support is provided by SSTL/SSC to help guarantee mission success. SSTL/SSC are motivated by the education of the engineers, the opportunity to participate in a mission that making use of bleeding edge technology and by the capture of the valuable lessons learned by the team while doing such a novel mission.

Mission Chronology

STRaND-1 started out as a feasibility study and mission requirement exercise in the Mission Concepts team at SSTL in the February of 2010. The aim of the study was to answer the question: 'what could Surrey do to harness the miniaturisation revolution of consumer electronics of the last 10 years (i.e. since SNAP-1)?'. Simultaneously, SSC were developing advanced CubeSat technologies, and so the two organisations made use of the serendipitous timing. The result of the feasibility study and requirements exercise was an initial mission concept for a rapid, extremely low cost technology demonstrator, including a list of payload candidates, a component make/buy list, high level concept of operations (CONOPS) and mass, power and budgets.

The goals set for the inaugural STRaND mission were graduated into three levels of priority, and covered all aspects of the programme, including programmatic, management and technical goals. The three levels of programme goal priority were primary, secondary, and tertiary, or informally the "must-haves", "nice-to-haves", and "if we're lucky". Only the primary set of goals need to be achieved for the mission to be a success.

A first call for volunteers went out in the summer of 2010, and an overwhelming response from staff at both SSTL and SSC was received. This number was reduced to a manageable level through organic means of consultation about realistic work levels, project priorities and personal benefit from involvement on the mission.

By January 2011 the team had finalised the payload selection, finalised all the make/buy decisions, made some initial procurements, completed a first draft of the 3D design and started detailed design work on the subsystems to be developed in-house.

At this point the first press release and academic paper were published [2] receiving great interest from the technology media [3] and CubeSat academic community. The key parts making STRaND-1 and photographed for media use is shown in Fig. II.

Figure II: STRaND-1 Hardware in January 2011

Progress continued on the technical design, culminating in a Saturday workshop in July in replacement of a Critical Design Review.

The mission is now in MAIT phase, with some basic functionality tests complete and regression testing methods used as and when new modules are added to the system. This way of doing MAIT has been found to be the most flexible when the order in which the units are ready for integration and test is unpredictable.

Mission Goals

As discussed in Mission Chronology, the Mission Goals were gradated in to three separate levels of priority. As shown in Table I, the bar for mission success has been set intentionally low as STRaND-1 is primarily a training mission.

A number of the mission goals relating to gaining engineering experience and maintaining ties between the two organisations have already been satisfied, and in some ways the programme can already be considered a success.

What remains is the execution of the remainder of the development of the STRaND-1 satellite and the execution of the mission.

It is expected that the satellite hardware will be ready to deliver to a launch agency before the end of 2011.

Requirement	Mission Requirement
Primary	• Gain engineering experience for SSTL staff • Work closely with SSC to maintain ties with the university • Fly *something* and demonstrate an operational telemetry link
Secondary	• One or more of the payloads work • Rapid development and build time • Demonstrate the use of modern COTS for space applications by accepting an above-normal level of technical risk
Tertiary	• Remote inspection of a rocket body • Sustained outreach programme • Gain heritage of STRaND components for use in commercial SSTL missions

Table I: STRaND-1 Mission Goals

II. TECHNICAL DESIGN OF STRAND-1

Overview

STRaND-1 is what is known as a three-unit (3U) CubeSat, meaning that the design of the satellite follows the guidelines of the CubeSat Standard [4]. To investigate how much could be achieved with a 3U design limit; CAD models were used to investigate the volume fit of each module and associated parts. Figures III and IV show the CAD design with and without the main chassis.

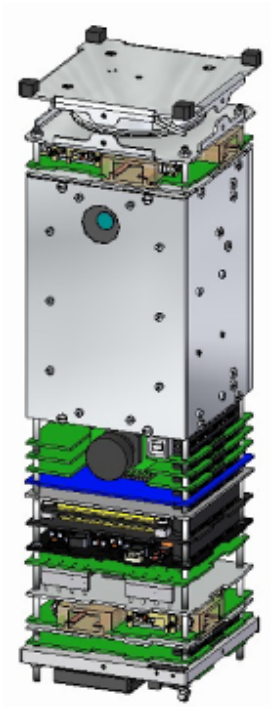

Figure III: CAD Design of the STRaND-1 satellite without the main structural chassis

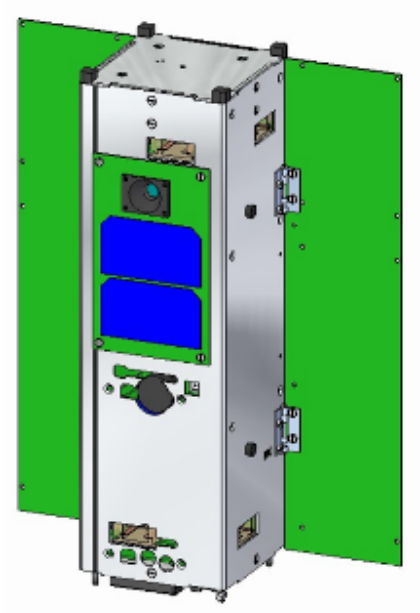

Figure IV: STRaND-1 CAD image showing the nadir panel and both deployable solar panels in their deployed state

Configuration

STRaND-1 uses a Pumpkin 3U (Rev D) [5] solid-walled chassis with Surrey-built deployable solar panels to provide increased power. The panels hinge along the

long edges of the satellite and can be considered "wings" given their nominal orientation to the flight direction. The deployable panels have a secondary function at the end of life, when the satellite's orientation is changed to increase the satellite's ballistic co-efficient to increase atmospheric drag and to aid in the de-orbiting of the satellite.

The system diagram in Fig. V shows the key subsystems and buses on STRaND-1. Given the adoption of I^2C by existing CubeSat COTS modules, most of STRaND-1's subsystems operate as slaves, only responding to requests from bus masters. The primary bus master is the GomSpace OBC [6] but the OBC itself may operate as a slave to upload new binaries or for fault recovery. The transceiver radio module can send a watchdog interrupt signal using a dedicated UART to the OBC to reset it to a slave mode where a recovery or new binary can be uploaded, known as a bootloader mode. To return back, the transceiver can send a reset to master command where the standard mode of operation is returned.

Additionally, when the mobile phone performance and susceptibility to SEUs has been characterised to a satisfactory level, the I^2C bus shall be switched again to make the mobile phone the bus master, and so it can act as the OBC of the satellite.

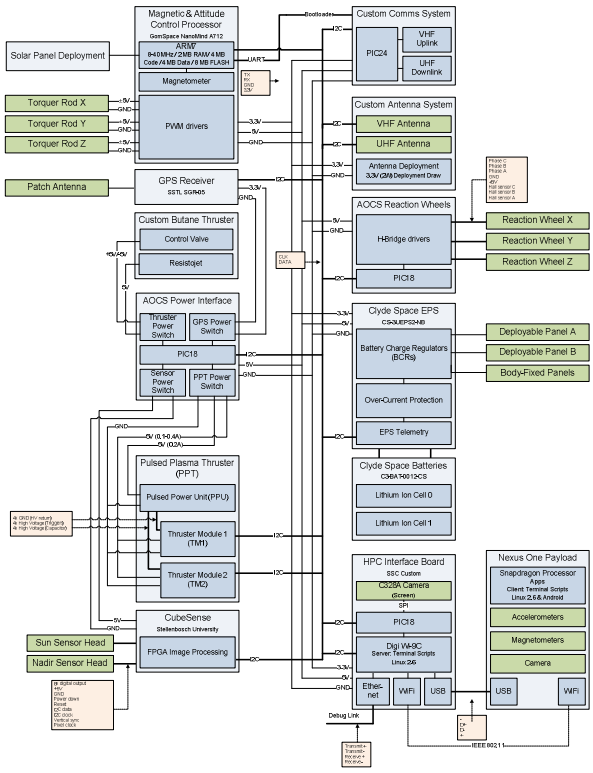

Figure V: STRaND-1 System Block Diagram

<u>Mass and Power Budgets</u>

Table II shows the spacecraft mass composition by sub-system before a 10% system margin is applied. As can be seen in Figure VI, the structure, AOCS and propulsion system dominate the total mass. When one considers that both the propulsion system and AOCS are in fact demonstration payloads, the total payload complement accounts for 43% of the system mass. The structural mass is 30% of the total mass implying that further structural mass optimisation is possible and desirable.

System	Mass with 10% margin
AOCS	0.4
Power	0.2
Communications	0.3
Propulsion	0.5
OBDH	0.1
Environmental	0.0
Structure	1.0
Harness	0.2
Payload	0.4
Sub-system total	**3.2**
System margin	0.3
Dry mass	**3.5**
Propellant	0.4
Launch mass	**3.9**

Table II: Spacecraft mass budget

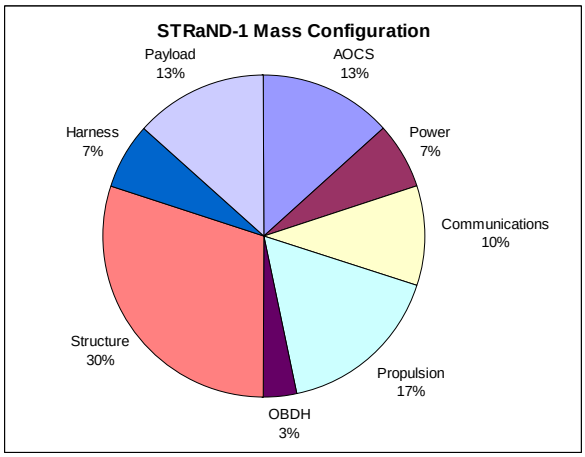

Figure VI: STRaND-1 Mass Breakdown

Over a single orbit the spacecraft can raise 10 W peak power and 3 W orbit average power (OAP). OAP can be increased by operating the satellite in sun-pointing mode, where the orientation of the satellite is fixed with respect to the Sun, which increases the OAP to 5.8W. Peak power demand could be as high as ~24 W, occurring when all systems are operated at the maximum operating power rating. The 20 Whr batteries would permit ~1.25 hr of continuous peak demand operations in eclipse and ~1.40 hr with solar power averaged over the orbit. As no program requires the

case whereby all systems are operating in this manner, a nominal peak power demand of <10 W is expected.

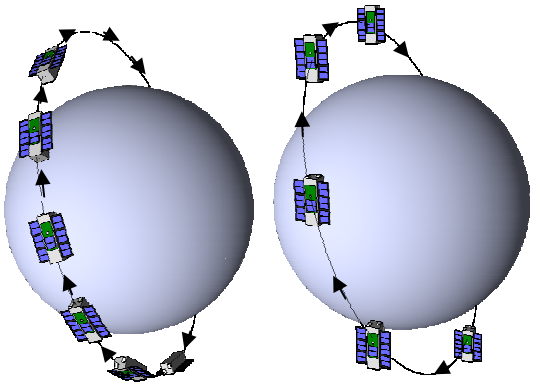

Figure VII: S/C Orientation in Nadir-pointing mode (left) and sun-pointing mode (right)

System	Power, W
Pulsed plasma thruster	4.9
AOCS controller	0.1
AOCS Sun/Nadir sensor	0.5
GPS Receiver	1.0
RF Transmitter	3.3
RF Receiver	1.6
Butane resistojet	7.0
Smartphone	1.2
High Performance Computer	2.0
Sub-system total	**21.6**
System margin	2.2
Total peak power	**23.8**

Table III: Peak power demands of various s/c components

COTS Subsystems

There are numerous commercial off-the-shelf systems on STRaND-1, these include the GomSpace A712 OBC [6] ClydeSpace Electrical Power System (EPS) [7] and Daughter Battery module [8], Pumpkin CubeSat solid wall structure [5], SSTL SGR-05 GPSR [9], and Digi-Wi9C module [10]. These units were chosen to reduce development time of STRaND-1 where building an equivalent unit in-house would have driven the schedule, or where the cost benefit was such that it costs less to make the purchase than develop in-house, even when using voluntary effort.

Onboard Computer

The system is an off-the-shelf GomSpace A712 "Nanomind" computer which includes a 40MHz ARM7 processor, 2MB RAM, 8MB Flash, I^2C controller, three-axis magnetometer and 3 reversible PWM outputs for driving magnetorquers. The unit is in the PC104 form factor and thus forms part of the spacecraft's core system stack.

During normal operations the GomSpace OBC controls the overall operation of the spacecraft. The intention is that experiments on the phone will demonstrate its utility as the spacecraft's primary OBC, at which point the GomSpace unit's role will be kept to a minimum: just enough to keep the spacecraft flying in a state that will catch the Sun and allow the smartphone camera to image the Earth and other targets, and allow said images to be transferred to the ground. In order that such activities can be orchestrated from the ground, the OBC system also relays commands and telemetry between the hardware attached to the I^2C bus on the spacecraft, and the ground, effectively making itself transparent in this respect.

The OBC is loaded with a FreeRTOS-based minimal operating system supported by a "newlib" C library which, together with some functions furnished by a GomSpace-supplied library, provides enough functionality to read the magnetometers and drive the magnetorquers and I^2C bus. It is left to the STRaND-1 developers to add tasks to this system which operate the STRaND-1 spacecraft as required.

In order to achieve maximum reliability while providing a suitably flexible operating environment for the varied experiments that might be conducted on board, the STRaND operating system (which sits on top of FreeRTOS, newlib, and the GomSpace library) is a very small kernel just capable enough to sequentially (round-robin) execute modules of code loaded in memory; two such modules are pre-loaded and provide the means to upload new modules and to manipulate the module execution list. Upload is completed through a custom "Strandatoga" protocol allowing the OBC to reverse-acknowledge reception, allowing the system to re-request missing or corrupted fragments. With those in place further such modules can be pre-loaded or retrospectively actively loaded to take care of all the requirements of the OBC.

The lowest-level requirement of the OBC is to master the I^2C bus and to provide timely access to it by the attitude determination and control system (ADCS) which also runs on this computer. This in fact dictates the main operation of the OBC: all modules are executed in a round-robin fashion up to the top of each second, when the ADCS is allowed to run. This also means that the ADCS has full mastery of the I^2C bus when it runs, and thus can perform its operations with implicit reliability and timeliness. The ADCS will operate the rest of the spacecraft using the same telemetry and telecommands and interfaces described below.

The system provides access from the ground to all the physical telemetry points on the I^2C bus, and allows telecommands to be relayed to those nodes. The OBC

itself also provides soft nodes which allow the ground station access to the operating system's, and ADCS's, internals, and these can be utilised as intelligent I^2C nodes which operate other items on the spacecraft with more high-level semantics. In order to ensure that all eventualities can (theoretically) be dealt with, the underlying principle that has been followed in designing the OBC's own telemetry points is that all internal variables can be accessed and modified live. This is accomplished by mapping nodes onto modules, and channels to offsets into structures in which each module keeps all of its data. Access to these data is through a shadow application on the ground which is compiled using exactly the same source code headers as the on-board software, so that it knows exactly how the various variables in all the modules are packed into the structures and relate to the telemetry and telecommand "nodes" and "channels".

In order to perform mission tasks the OBC will itself execute telecommands at given times. Schedule files ("skeds"'; lists of telecommands and requisite times) are uploaded using the same mechanism as for uploading modules, and then the top item on the sked will be inspected frequently and a telecommand issued if the time is right.

The highest-level task the on-board computer must carry out is the marshalling of images from the smartphone, via the high performance computer (HPC), to the transmitter so that they can be received at the ground. The previously-mentioned Strandatoga protocol is available for ground-based negative acknowledgement (allowing the ground to indicate parts of images which must be re-transmitted due to drop-out) if required, though probably in the case of images this facility would not be used with the occasional drop-out of some image pixels being tolerated by the operators.

Electrical Power System

The STRaND-1 power system is operated using the ClydeSpace electrical power system (EPS) and 20 Whr daughter battery board. Using these two parts, the satellite can regulate power flow from the solar panels, to the battery, and to various payloads. There are two 30 x 10 cm solar panels, a smaller tertiary dorsal panel and a smaller panel facing Earth. The largest panels will provide 6.9 V at 0.86 A with 6 triple-junction 4cm x 7cm 27.5% efficiency solar cells, reduced to 26.5% due loss of area, diode leakage, and covering. Both EPS and battery modules are addressable I^2C nodes which can send status bytes on module temperatures and currents.

Other Subsystems

One of the best examples of where the 'T' in STRaND can be seen is in the communication system. Early on in the mission it was decided that the whole radio chain from antenna to analogue radio to digital section to bus would be developed in-house. Given the historical strength of SSTL in space-worthy radio communication systems it was felt this provided the best learning opportunities, and opportunities to tap existing expertise in the company. Therefore a team of engineers with limited RF design experience designed the RF section of the STRaND-1 satellite under supervision from some of the most experienced engineers in the company.

Antenna Assembly

STRaND has two monopole antennas; one for the 2m-band uplink and one for the 70cm-band downlink. The requirements for the antennas were to:

- Be lightweight
- Be deployable
- Have a failsafe to ensure the antennas get deployed in case of deployment electronic failure
- Fit the limited volume available, and
- Have a sufficient gain for the link budget

The antennas are based on the standard UHF/VHF whip antennas used by SSTL on their early commercial satellites, and are influenced by the Delphi C3 antenna deployment mechanism. The design is different from the Delphi C3 solution in that the box geometry is different; antennas are mounted to deploy out of the side of the spacecraft instead of the top, which saves volume to allow more modules in the CubeSat stack. The design also differs in the removal of the electronics which have been moved to a separate electronics board. The approach not only simplifies the electronic design but also simplifies the physical design to allow easier manufacturing with fewer components.

The Modular Antenna Box (MAB) comprises of the box itself which is a plastic unit (as shown in Figure VIII) which is mounted to a standard PC104 PCB. The PCB also contains the analogue section of the RF transceiver creating shorter connections between the antennas and the circuit. Another key component is the antenna which is made out of an old, used tape measure (kindly donated by a STRaND volunteer) cut to the correct length and fitted inside the MAB. The final component is the release mechanism which is a resistor and a length of nylon wire. The nylon wire is designed to hold the lid of the MAB down during launch. The wire is tied to the lid and then wrapped around a resistor and tied off to an anchor point. On launch the RF transceiver unit will pulse a current through the resistor which should melt the nylon wire releasing the antenna. If the nylon wire does not melt it will outgas enough to be structurally weakened and snap, thus deploying the antenna.

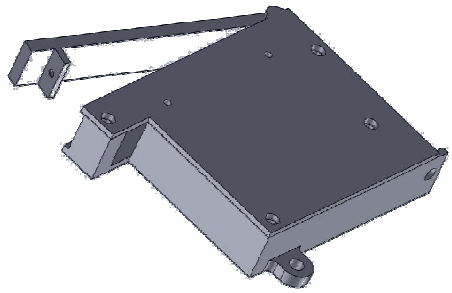

Figure VIII: Modular Antenna Box (MAB)

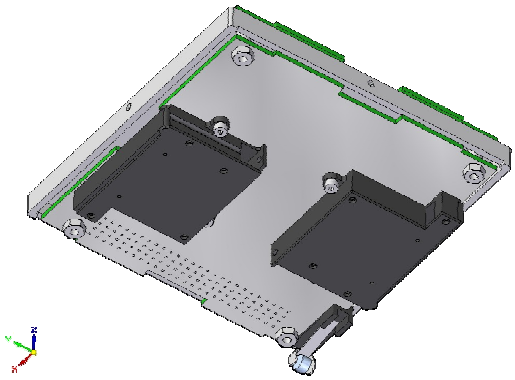

Figure IX: Integrated Antenna Unit including both the VHF and UHF MABs

Radio Transceiver

The RF transceiver provides the following key functions:

- Activates the antenna deployment mechanism
- Receives and decodes data from the ground
- Encodes and transmits data to the ground
- Transmits a beacon
- Transmits and receives data to/from the OBC via the spacecraft's I^2C bus
- Includes the ability to reconfigure the OBC via a dedicated UART interface

Frequency coordination with IARU has been completed, and IARU has recommended the frequency allocation of 437.575 MHz for downlink, and 145.860 MHz for uplink. The next step to be taken imminently is to notify the relevant national authority, who is then expected to notify the ITU.

Originally, the aim was to have both the analogue and digital sections of the design on a single printed circuit board for volumetric efficiency. Although manageable and indeed proven possible by the existing COTS CubeSat RF systems, this was a challenge for an ECAD learning activity, given the size of board allowed by the PC104 standard, including the large amount of real estate taken by the header and the component height limits. The component height limits forced the design decision to only place the smallest components on the underside of the board (i.e. surface mounted resistors and capacitors). This general strategy is validated by looking at the design of other well-known COTS CubeSat units such as the ISIS RF Transceiver unit family and the ClydeSpace EPS unit which also place their smallest components on the underside.

The PCB has four layers – Top, Ground, Power and Bottom. All signal routing and component placement is on the top and bottom layers, the majority of the components being on the top layer. Although in normal PCB design there is a different layer for each power plane and additional layers for signalling, this was not possible for this design due to height and cost constraints.

Subsequent design changes meant that the analogue section of the RF design was separated from the digital section of the design, and merged with the antenna control board. Not only did this design change help ease the transmission length issues, it allowed more room on the now purely Digital RF board for the routing, and also makes the solution modular and upgradable.

The modular concept allows the analogue up and down mixing design to be changed without any impacts to the digital design (the interface being the I/F lines), significantly simplifying future upgrades for S-Band capability and robust cross-strapping redundancy.

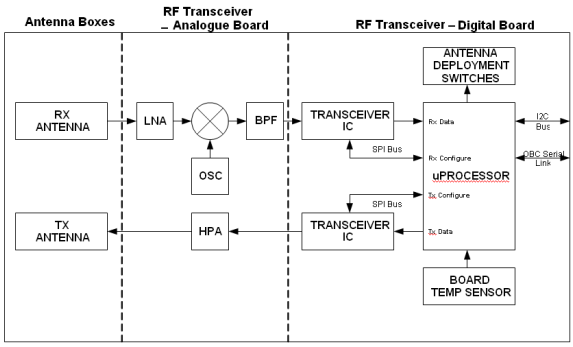

Figure X: RF Transceiver Block Diagram

The RF subsystem as a whole is centred on inexpensive and readily available single chip UHF transceivers. Two of these devices are used; one for transmit and one for receive.

The transceivers are controlled by the PIC24 microcontroller. Since the downlink frequency is the same as that outputted from the transmitting IC, the RF output from the transceiver is passed directly to a GaAs High Power Amplifier (HPA) and then to the transmit antenna. The HPA will provide nominal RF output power of 1 W, which can be increased to 1.5 W if required. When operating in Beacon / CW mode, the RF output power will be reduced to 0.25 W. On the uplink, the UHF input from the receive antenna is first

amplified by a low noise MMIC amplifier and then up-converted to UHF frequency before being passed to the receiving IC.

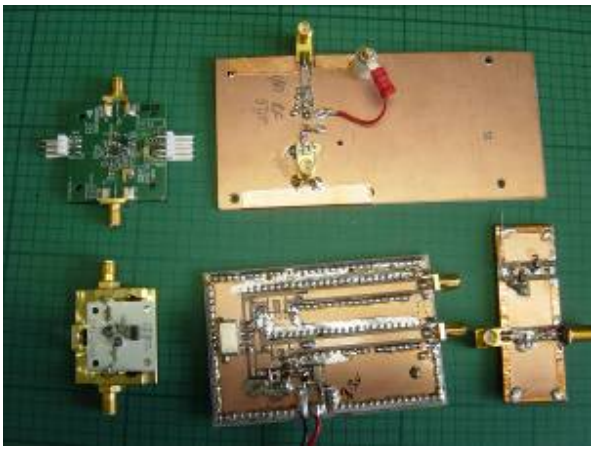

Figure XI: Breadboard components for analogue front end of STRaND-1 Radio Transceiver

The digital section is centred on an inexpensive and readily available PIC24 microprocessor. The transceiver ICs are configured on power on by the microprocessor via an SPI interface. Data is transmitted to/from the microprocessor via a separate serial line. The microprocessor performs AX.25 decoding/encoding of received and transmitted data respectively. The primary method of communication with the rest of the spacecraft is via the I^2C bus; telecommands, telemetry and data are all sent via this bus. It is also possible for the ground station to communicate directly with the RF transceiver via a limited command set and a dedicated serial link to the OBC is also provided. These combine to allow the OBC to be reconfigured in the event of a fault, or if a software update is required.

Butane Propulsion System

The propulsion module on STRaND is split into two parts; the SSTL butane resistojet (based on the heritage SSTL resistojet) and the SSC Pulsed Plasma Thruster (PPT).

The STRaND-1 CubeSat is baselined to have a warm gas butane propulsion system on board to enable orbital manoeuvres. The system builds on the extensive SSTL heritage with the design and operation of butane propulsion systems, while testing out new processes and hardware to reduce the system size and cost. These two points are critical to enable the system to be viable for a CubeSat. The propulsion system must fit in a space smaller than 75x75x21mm, and had to be completed on a stringent budget. Typical space-rated components were ruled out for these reasons.

The system is designed to provide $2ms^{-1}$ ΔV to the STRaND-1 CubeSat. A basic schematic for the system can be seen in Figure XII. It should be noted that no redundancy exists, and this is the accepted approach for this mission. The ΔV capability would also be reduced if redundancy were required – tank volume would be reduced to allow space for the redundant components.

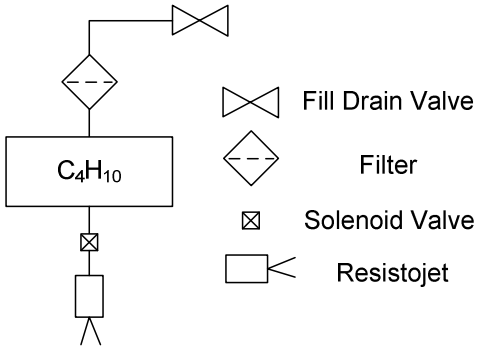

Figure XII: STRaND-1 Propulsion System Schematic

The propulsion system will be loaded with propellant through a fill/drain valve. For this, a Lee chek valve is utilised with a special ground half coupling manufactured to allow the valve to be opened mechanically. The valve is incredibly small and affordable making it ideal for this application.

The propellant is stored in a bespoke tank, constructed from two aluminium billets and welded together. Butane is a liquefied gas so stores under its own vapour pressure (~2.1 bar at 20^oC). The tank is designed to survive a burst test of >4 times maximum expected operating pressure (MEOP) to prove it is safe for launch. MEOP has been defined as 4 bar, and so the burst pressure will be in excess of 16 bars. A temperature sensor is attached to the tank – this will allow the pressure in the tank to be estimated.

A Lee solenoid valve is employed as a flow control valve in the system. The small size again made it ideal. All internal materials are compatible with the propellant and test gases.

The resistojet itself is manufactured by SSTL. It is a simple design consisting of a resistive wire wound round a mandrel. The gas is forced to spiral down the resistojet to increase the travel path and thus the heat transfer. The resistojet acts as a vaporiser to ensure no liquid propellant is expelled, as well as increasing the specific impulse of the system.

A CAD image of the system can be viewed in Figure XIII.

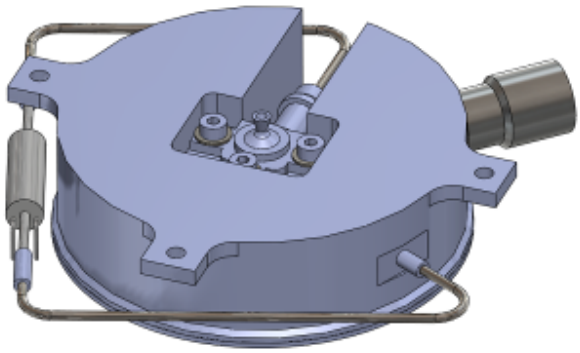

Figure XIII: SSTL-heritage resistojet embedded in a custom propellant tank

Pulsed Plasma Thrusters (PPTs)

The PPT is a form of electric propulsion (EP) thruster that operates in a non steady (i.e. pulsed) nature. Energy is drawn from the satellite bus and stored in the thrusters' capacitors (two parallel CR09 ceramic chip capacitors per thruster). The electrodes of each capacitor act as the propellant source. When the electrodes are shorted, large currents form that pass through the electrodes eroding them. In the case of STRaND the shorting mechanism is a contact trigger actuated by an external initiation device. This contrasts to other PPTs where initiation is nominally by a sparkplug.

The material released in this erosion forms plasma. A Lorentz-force (**J**x**B**) is produced from the interaction between the high flowing current and the subsequent induced magnetic field. This µN force propels the plasma out of the nozzle to generate thrust. Once the PPT capacitor discharges completely, the plasma is extinguished and the process begins anew, leading to a discrete set of impulse packets that can be used for manoeuvring.

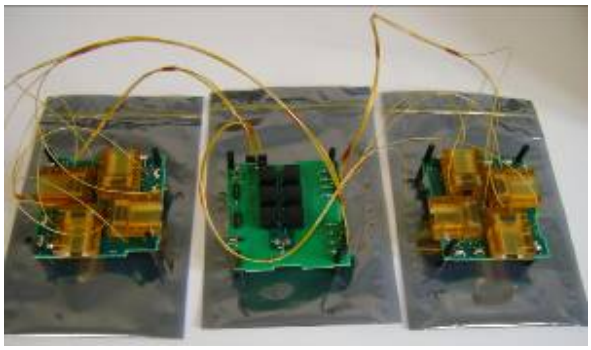

Figure XIV: Pulsed Plasma Thruster Bank Flight Modules

The STRaND pulsed plasma propulsion system is made from three PC104 Boards. Two boards house four PPTs each and the third acts as the pulsed power unit (PPU). The PPTs are two CR09 chip capacitors placed in parallel to provide a total capacitance of 0.76 µF. They are welded to tin coated copper electrodes that are 'blade like' in nature to provide reduced internal inductance and to promote electrode erosion. The capacitor and electrodes are housed within ULTEM™ cases and the thruster is initiated by a spring loaded contact trigger mechanism using a piezo- electric motor. The capacitors are charged to 800V, supplied by the PPU. The PPU uses a set of six parallel high voltage DC-DC convertors taking the 5V CubeSat bus voltage to 800V. Single chip power filters are used to minimise ripple effects on the power lines and a set of diodes and high voltage resistors are used to ensure correct thruster firing and to limit spot welding. The predicted performance of the PPT module from models generated by the University of Surrey suggest that the specific impulse of the technology should be around 320s with a total ΔV of around 2.7ms^{-1}. However with a slight simple modification to the electrode design in future versions of the design this should increase to around 76.3ms-1.

Additional testing performed using the University of Stuttgart's impulse balance apparatus has revealed that the PPT's true specific impulse is 1340 seconds, requiring 1.5W of power and producing a thrust of 0.9µN (averaging the impulse bits that fire at a rate of one every four seconds)

If STRaND-1 is successful this will be the first EP thruster to operate successfully on a CubeSat platform.

Attitude Determination System

The CubeSense module is an integrated sun and nadir sensor for CubeSat attitude sensing. It is also the subject of another dedicated IAC paper [11]. It makes use of two CMOS cameras – one dedicated to sun sensing and another for horizon detection – mounted on a PC104-sized PCB.

The Sun sensor has a neutral density filter included in the optics to ensure that only the sun will be visible in the image. Both cameras have wide field-of-view optics (180 degrees) for increased operating range. The primary outputs of the sensor are the measured Sun vector and nadir vector in the sensor's coordinate frame. The measured vectors are output as azimuth/elevation angles relative to the camera bore-sight. The CubeSense module can also be used as a camera and is shown in Fig. XV.

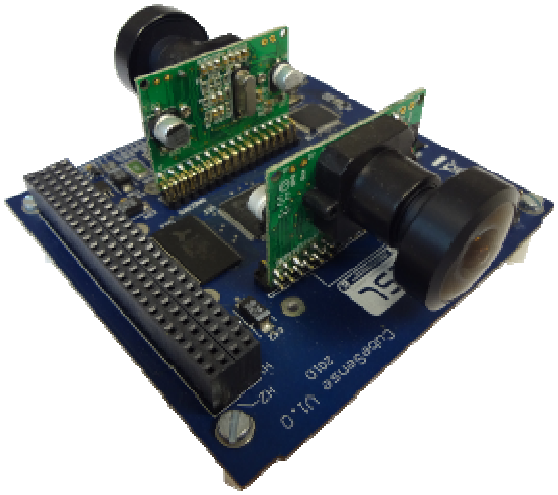

Figure XV: Univ. of Stellenbosch-developed CubeSense Attitude Determination System

Attitude Control Actuators

Three reaction wheels will be flown on STRaND-1 in an orthogonal configuration. These will provide three-axis control, augmented by the magnetorquers for desaturation but also used as momentum wheels for the commissioning phase. Due to volume constraints, two differently sized wheels are used. Fortunately, due to the non symmetrical nature of STRaND-1 both wheel sizes have been designed to meet the same performance. The reaction wheels are capable of slew rate of 90º in 60s at a maximum wheel speed of 5000rpm. Each wheel is an independent I^2C node consisting of a microcontroller that handles the communication, motor commutation and control loop. The brushless DC motor is driven by three half H-bridges made from discrete components. A PID control loop is used with a maximum error of ±5rpm over the full speed range. The nano-wheel and assembly are shown in Fig. XVI.

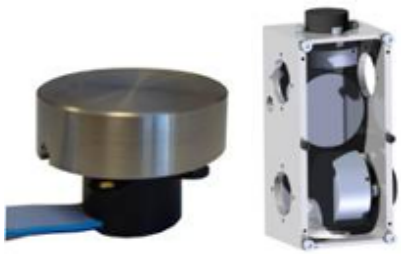

Figure XVI: STRaND-1 Nano-reaction wheel (left), and RW assembled unit (right)

External torque is provided by three orthogonally mounted magnetorquers, each comprising a 6.35mm diameter, 74mm long rod of Supra50 Iron-Nickel alloy, with ~32m of 30 SWG (0.315mm diameter) enamelled copper wire, giving a resistance of approximately 8 ohm (i.e. limiting the current to ~625 mA at 5V). There are 172 turns per layer and 7 layers giving ~1200 turns and a total diameter of ~11mm. The expected magnetic moment is between ±0.4 and ±0.8 Am^2. The torquers are controlled by a NanoMind A712B computer board, which provides three 5V pulse-width modulated (PWM) bi-directional H-bridge drivers, which can each source up to 3A, with a total current capability also of 3A. The combined current draw of the three magnetorquers is 1ess than 2A.

Attitude Control Methodology

The STRaND-1 satellite will employ various control modes throughout its operation. The first detumbling control mode will engage automatically after being released from the launch vehicle. Initially the satellite will be tumbling at an unknown rate. The purpose of the detumbling controller is to limit the angular rotation of the satellite ultimately resulting in a rotation only about the Y-axis, where the rotation rate is controlled to a reference value (typically 2 deg/s). Additionally, the satellite Y-axis will be aligned with the orbit anti-normal. This is achieved with combined B-dot [12] and Y-Thomson [13] control laws.

The controller requires knowledge about the current attitude rate. A Kalman filter rate estimator [14] that makes use of successive magnetometer measurements will provide this information. The estimator does not require any orbit information and is robust against modelling errors.

Another advantage of this control mode is that it requires attitude sensing information from only the 3-axis magnetometer, and control is achieved using only the torquer rods. The mode can thus be implemented using only the NanoMind processor and its peripherals.

After the solar panels have deployed, the control mode will change to a sun-seeking precession controller [15]. The STRaND-1 satellite has its main solar panels facing in the +Y body direction. In the previous detumbling control the satellite Y-axis (and thus also the solar panel normal vector) will be angled away from the sun direction. The sun-seeking precession controller will make use of measurements from the sun sensor of the CubeSense module to precess the solar panel normal vector to the sun vector. All the while the satellite will still be tumbling about its Y-axis and during eclipse the controller will fall back to the Y-Thomson mode to control the spin rate to 2 deg/s.

The remaining control modes will make use of the reaction wheels. The first mode will use the Y-axis aligned reaction wheel as a momentum wheel to absorb the angular momentum of the spinning satellite and bring it to an approximate nadir pointing attitude. It will also continue to align the spacecraft body Y-axis with the sun vector for optimal power generation, and damp

the nutation rates about the body X- and Z-axes. In eclipse the satellite will remain nadir pointing.

From the Y-momentum mode, the 3-axis controller can be activated. In 3-axis control mode all three reaction wheels will be used to control the attitude to some reference attitude and the torquer rods will be used to manage the reaction wheel momentum (momentum dumping). During eclipse the reference attitude will be the nominal attitude (zero roll, pitch and yaw) and in sunlit parts of the orbit the reference attitude will be calculated so that the body Y-axis points toward the sun. Additional commands from the ground can be sent to change the reference attitude temporarily so that specific pointing manoeuvres can be performed.

The Y-momentum and 3-axis control modes requires both attitude and attitude rate information. This will be provided by a full-state EKF (extended Kalman filter) [14]. The EKF makes use of sensor measurements from all the available sensors (magnetometer, sun and nadir sensors) and corresponding modelled vectors for each of these to estimate the current attitude quaternion and also the orbit referenced angular rates. The modelled vectors are obtained from a sun orbit model and IGRF magnetic field model, running on the OBC. The modelled vectors also depend on the current satellite position. This will be provided by an SGP4 orbit propagator running on the OBC, initialized with a two-line element set that will be uploaded from ground once this becomes available.

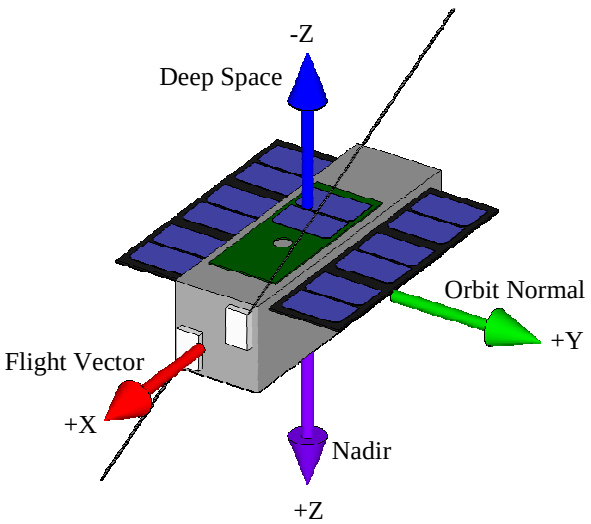

Figure XVII: STRaND-1 body-fixed axis definition

High Performance Computer

The high performance computer (HPC) is based on a modified Digi-Wi9C [10]. The primary uses are to provide I^2C interfaces and communications between the smartphone and spacecraft bus, as well as additional services for monitoring the Nexus-One. These services include:

- Basic Control (on/off) using GPIO and USB ports. This is achieved by an application on the smartphone and a switch between the smartphone's battery and the smartphone itself.
- Wireless Control (on/off) using WiFi interface. If the USB fails, then WiFi access is possible using a virtual terminal and mounting of the SD-card in Linux.
- Upload/Download code using any port or interface. This may include operating system, user, data, or application installations to various partition areas on the smartphone.
- Telemetry Handling. Converting data and metadata (discussed later) to I^2C formats. Both the Digi-Wi9C and Nexus-One are experimental payload computers and use separate addresses, handled using a separate PIC microcontroller.

The HPC board monitors the smartphone using USB as the primary link and the WiFi as the secondary link, with the capability to operate at the same time for limited experimental periods. An additional VGA camera is mounted close to the smartphone and can provide visual access should both USB and WiFi links fail as shown below in Figure XIX.

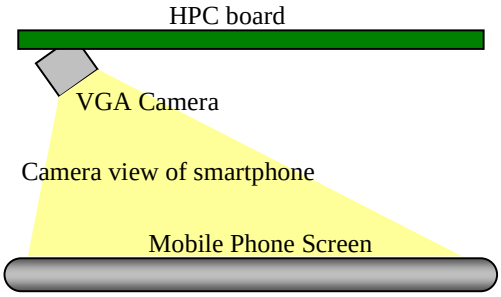

Figure XVIII: Diagram showing how the internal configuration showing the VGA camera and the mobile phone.

Figure XIX: Nexus-One Monitoring Camera

There are numerous applications currently under development or test. These include a house-keeping telemetry app, which periodically pings the phone to ensure status, and smartphone charge/discharge drivers.

Mobile Phone System

The smart phone was chosen after an extensive trade study as part of the initial feasibility study. The smartphone chosen was the Google Nexus-One [16] and has been integrated into the STRaND-1 CubeSat with the initial aim of providing the main imaging payload but with the ultimate intention to assess the opportunity to assess the smartphone's capabilities to perform the primary on-board computer role. With the limited project timescale, the focus is on finding 'fit-for-purpose' rather than technically superior solutions. In-orbit updates will be used where possible to improve the software capabilities.

The Nexus-One will connect to satellite subsystems over USB using the HPC which will allow a Linux platform to operate a reduced Android Debug Bridge (ADB). This ADB will facilitate the control over flashing boot kernels, restarting the phone and installation of new applications (or 'apps'). The Android development Kit (ADK) is also under investigation as a more advanced interface library. The Nexus-One's flash memory acts as a shared space between the HPC and Nexus-One for telemetry, telecommand, payload acquisition, processing schedules, and payload imagery managed by both systems. Each of these 'components' will consist of a metadata file and a data file. However, to address possible SD Card corruption dues to single event effects (SEEs), etc., both the metadata and data files will be triplicated. As any usage of the 'data' component will need to manage read/writing with these three files, the HPC and phone will operate an abstracted layer to control these interactions. Both the phone and the HPC will be responsible for their management of these metadata and main data files and will use the metadata header and data table to ensure seamless synchronised shared usage of the data; e.g. marking up a block when the device is writing to it, etc.

Uploads of new software (kernels, apps, etc.) will be managed by file control messages with the files being directly stored on the SD Card rather than through this metadata/data mechanism as usage and management of these will be through other tools such as Fastboot and ADB on the HPC. The phone itself will autostart the prime schedule and status management tool that is responsible for managing the execution of phone apps, telecommand handling, output of critical telemetry, and the interaction with the component metadata/data files on the SD Card.

The Linux kernel is a reduced version of 2.6.32 with GPS functionality removed amongst other minor changes to produce a smaller memory footprint. The Xconfig tool supports the production of bespoke kernels but is a challenging and unintuitive tool to create a compatible kernel on both the HPC and Nexus-One. For the payload, there are multiple resolutions supported by imaging schedule files and the system will default to the maximum image size of 2592 x 1944 pixels with image data saved as lossy-JPEG with tailored compression.

Development of applications and software is currently ongoing, with the aim to support STRaND Facebook Apps [17]. The Linux kernel and Android kernel are both fully compiled and tested as shown in Figure XX. The smartphone itself is also under rigorous testing as also shown in Figure XX in the holding tray.

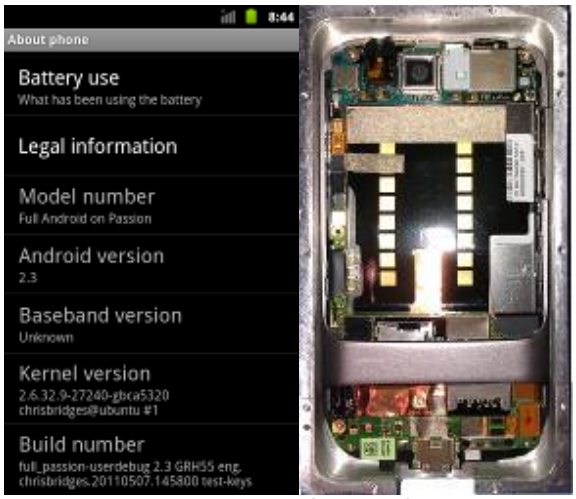

Figure XX: Nexus-One Software Information and Nexus-One Payload in STRaND-1 payload-tray

The phone has already been vacuum tested. The phone was placed in to a vacuum bell jar and pumped town to 1 millibar (+/- 0.5mbar), and no adverse effects were observed. The phone has also undergone preliminary thermal stress tests, where the phone was found to operate between +65°C and -5°C, and to cease operation and power down outside of this temperature range.

The thermal tests have highlighted the sensitivity of the phone to cold (i.e. automatic power-off), and so more focus has been given to keeping the phone warm on the satellite through charging regimes and processor intensive routines.

Figure XXI: Nexus One under vacuum test at SSTL premises

A radiation test has been conducted on the phone, however the results were inconclusive due to an error in the test setup. The phone was subjected to a dose in excess of 21kRads, and would not power on after the test. A further radiation test of 3 units will be conducted in the near future with a more robust test setup, recording multiple telemetry points inside the phone.

III. CONCEPT OF OPERATIONS

LEOP

Objective: Accelerated Commissioning
Estimated duration: 2 days as a goal, 1 week planned
Operation mode: Manual

This stage requires intensive use of the OBC and AOCS and manual control from the SSC ground station and other ground stations. It is estimated that approximately 5 to 10 min of communications with the ground stations will be available on each pass. This time shall be used efficiently; a full system health check will be required as start. Subsequent overpasses should allow progressive commissioning and a basic set of diagnostics for analysis without too much communications overhead. After separation with the rocket launcher, STRaND is required to:

1) Autonomously acquire its attitude
2) Promptly manoeuvre to reach a stable pointing.
3) Deployment of solar panels

This will ensure a thermally and power-safe initial state to continue with the mission. In a worst-case scenario the uncontrolled tumble of the spacecraft can only guarantee a maximum of 3 hrs of battery power before battery degradation occurs, and 10 hrs before the battery is 100% depleted. This corresponds to 2 orbits and 6 orbits respectively. The satellite will be thermally safe in tumbling mode before deployment of solar panels.

The GPS receiver will acquire the spacecraft position whilst built-in Magnetometers on the OBC will be used to measure both direction and magnitude of the Earth's field on 3-axis. The comparison of these observations with a vector model of magnetic field will determine the magnitude and polarity for the magnetorquer's firings to control the spacecraft's orientation. The initial tumbling rates expected are likely to be less than the 30deg/sec experienced by SNAP-1, as the CubeSat deployer uses guide rails.

Once the spacecraft has reached a safe state, a full system check is required. The communications system allows a direct link to the OBC flash memory to enable loading or reloading of OBC software without OBC involvement, but ultimately the OBC is required to log essential telemetry: magnetometer vectors, temperature sensors, solar array voltage / current, battery voltage. The minimum refresh rate is TBC and will define the minimum downlink data rate required.

A higher sampling rate is expected during initial stages but as the mission continues and increases confidence on each subsystem’s operation, then the sampling rates of magnetorquers can change to one or two samples per orbit.

Technical Experiments

The extreme capability of the mobile phone electronics suite allows for a number of interesting experiments that make use of the advanced COTS technologies.

Intra-satellite link

The nominal data link between the phone payload and the platform is a USB cable. One experiment to be conducted early on in the mission is to deactivate the USB link and operate the mobile phone using the WiFi link to the HPC only, perhaps demonstrating a distributed processing task at the same time.

Demonstrating the use of a COTS wireless link is a proof of concept for physically and electronically distributed space systems acting as a single logical unit.

Touchscreen-based random number generator

The capacitive touchscreen of the mobile phone is the focus of this experiment. It is hoped that SEEs will manifest themselves as detectable events using the Android-provided touchscreen API. Depending on the location of the detected effect, a number is generated and logged. The number generation log is then downlinked and analysed for true randomness.

WiFi downlink

Using an existing SSTL-owned S-Band dish, this experiment would aim to receive data transmitted from the mobile phone IEEE 802.11g antenna on the ground.

This experiment is currently undergoing feasibility analysis, looking at link budgets, Doppler effects, and any gain-increasing design changes such as the introduction of a slot antenna. If such a technique if feasible and can be demonstrated as viable, it would dramatically increase the volume of data that can be downlinked from STRaND-1.

Phone control of satellite

This experiment is a key goal of the mission, and demonstrating that an Android mobile phone is capable of operating a satellite has potential to revolutionise the nanosatellite (and particularly the CubeSat) field. The experiment will be graduated in that first it will merely mimic the scheduling and control functionality of the nominal OBC. Then, greater functionality (such as AOCS control) will be migrated to the phone unit, followed by a brief period running only on phone-resident sensors such as the camera, magnetometer and accelerometers. If the latter can be achieved with some reliability demonstrated by the phone then the result will provide strong evidence that nanosatellites and CubeSats in particular can miniaturise their systems even further and increase their capability further still whilst keeping the low cost advantage.

CCSDS SM&C

In partnership with Logica's Space division, STRaND-1 will demonstrate the use of the CCSDS SM&C protocol in conjunction with the open source Hummingbird [18] mission control system.

Pulsed Plasma Thrusters

As discussed in previous sections, the PPT bank is a novel and highly efficient electric propulsion system. Long term use of the thrusters on STRaND-1 will allow for in-orbit characterisations to be made and compared against current theoretical models and vacuum tests conducted at the university of Stuttgart, whilst also making observations about any adverse effects on the rest of the satellite system (e.g. power ripples, transients etc.).

If demonstrated to be a reliable propulsion system the technology has potential to be the propulsion system of choice for CubeSats due to its low power draw and solid propellant – thus avoiding the pressure limits in the CubeSat standards.

Outreach Activities

The combination of mobile phone technology and space technology has already been shown to spark the interest of the greater public and mainstream media. Outreach seen as a core duty of the STRaND programme, and is seen as a useful tool in inspiring future engineers to join the industry.

App Competition

In the summer of 2011, SSTL and SSC launched the first SpaceApp competition [17]. Members of the UK public were invited to submit ideas on Facebook for Apps that could be run on the mobile phone once in orbit. Submitters were expected to write the app themselves and deliver them to the STRaND-1 project by the end of 2011. Conditions of the competition included that the applicant must be a UK resident and the app must be written as an open source project to be uploaded on to s-android [19].

Four winners were selected from the entries, including app ideas in

- telemetry trend analysis
- plasma physics, and
- outreach – including
  - an experiment testing the assertion that "in space, no one can hear you scream", and
  - an outreach app described as "Postcards from Space".

Artificial Intelligence Chatbot

The combination of the very capable processor along with the inherent Java support provided by the Android platform, and the history of the Amateur Satellite community using satellites to communicate, has resulted in the concept to run an Artificial Intelligence "Chatbot" – or more specifically an "Alicebot" [20] on the mobile phone. Alicebots are AI routines specifically designed for communicating with humans in an instant-messaging environment. The aim of this experiment is to allow amateur radio operators all over the world to interact directly with the satellite, and also allow non-technical people the chance to interact with the satellite in a meaningful way, for example in school sessions.

IV. TEST CAMPAIGN

Test Philosophy

The test philosophy is similar to the development philosophy in that a subset of the normal SSTL test approach is taken, with great emphasis on using system end-to-end tests. Indeed, all new subsystems will be only be vibration tested or thermally tested for the first time during the system-level vibration and thermal tests. For STRaND-1, SSTL and SSC maintains a flexible approach to the sequence of AIT in an attempt to make the best use of any available hardware and facilities at any given time. This is to ensure that the maximum progress is made irrespective of the order in which the flight units become available for AIT. The distributed TTC system used on Strand accommodates this approach.

Test Plan

The modular nature of STRaND-1 allows initial electrical integration to take place in any order provided

core systems (e.g. power subsystem, harness) are available.

As unit interfaces are not available once the spacecraft is integrated, all data is obtained via the following CubeSat system connections and umbilicals:

- Data umbilical (primary and secondary TTC bus)
- RF Uplink
- RF Downlink
- Power from Solar simulator
- Safe / Arm connection (allows remote activation of the spacecraft)

Spacecraft configurations, voltages and temperatures are obtained via the spacecraft telemetry subsystem.

The Electrical Ground Support Equipment (EGSE) hardware and software will be based on the ground station design; this reduces compatibility issues to a minimum and allows verification and test of the TTC database and software.

Platform Pre-integration

All units and subsystems arriving in the AIT clean room for integration into the STRaND-1 platform are to be bench and performance tested.

All modules and subsystems will have completed and passed a 'Module Readiness Review' prior to integration.

All modules shall be visually inspected before integration. Special attention is given to connectors to check for contamination and damaged pins. The flight harness is inspected and checked against the harness manufacturing instructions and will be electrically tested.

Platform Soft and Hard Stack

Initial integration of the platform subsystems is in a soft stack configuration. The aim of the soft stack is to perform an initial check on each of the individually tested modules to verify that each one fits and functions with the harness

Initial soft stack provides an early opportunity to test interfaces between the platform and the payloads using available breadboards and/or EM models.

Full soft stack requires stacking and bolting the platform together using all flight modules and parts. It uses flight fasteners, but the fasteners are not necessarily torqued and adhesives are not used. A full soft stack spacecraft can be handled safely for thermal cycling etc, but can also be taken apart easily if any rework is required.

'Hard stack' assembles the whole platform into its flight configuration. The platform fixings will be at the correct torque levels; staking glue or RTV will be applied to all nuts and bolts. The flight harness will be attached to support locations; all connector fixings will be torqued and staked.

Following hard stack integration, a series of functional tests on the platform are repeated to confirm that all data and power interfaces are mated correctly.

Vibration Testing

A comparison between the GSFC-7000 standard [21] random vibration spectrum that is commonly used for CubeSats and the in-house SSTL Spectrum C random vibration spectrum will be conducted, and STRaND-1 will be tested as a fully integrated system to the worst spectrum at SSTL's facilities.

Thermal Testing

The fully integrated system will be tested in a thermal vacuum chamber on SSC premises. The fully integrated system will be subjected to the normal SSTL thermal cycle. A schedule decision will be taken before testing whether to conduct a 7-day burn-in test as well.

EMC Testing

Before the integration of the whole system, units with EMC considerations such as the RF transceiver and the pulse plasma thrusters will have some basic EMC characterisation tests, then the fully integrated satellite system will be placed in an anechoic chamber either at SSC or SSTL premises and the EMC environments around the satellite measured.

TTC End-to-End Tests

System tests will use hardwired connections to the Spacecraft TTC transmitters and the data umbilical will be connected; a wireless connection will be made from the EGSE to the Core Spacecraft Transmitted

A wireless TTC end-to-end test is performed using the ground station antenna. Commanding the Spacecraft through the receiver is confirmed, and then telemetry reception from the transmitter is confirmed. OBC code upload tests are performed through all receiver and transmitter combinations.

Flight Readiness Review

The FRR is the final review of the Spacecraft integration and test campaign. This review will:

- Confirm that all the tests have been completed as per the test plans
- Confirm all the results have been reviewed and accepted
- Confirm that all anomalies have been resolved
- Confirm that the required shipping and export documentation and clearances are in place

The FRR will be at a much reduced scope compared to a commercial SSTL mission.

Delivery to Launch Agency

The spacecraft will be placed in its transit case and packed together with associated MGSE and EGSE.

V. CONCLUSION

Virtues of the Technical solution

STRaND-1 is a testament to the enthusiasm of space engineers in Surrey, in that they are willing to spend their own time developing a nanosatellite of significance.

This paper has described in some detail the technical novelties to be demonstrated by the mission, and the fact that all the satellite hardware has been developed for less than $100,000 shows that the innovation in low-cost space technology continues unabated at SSTL and SSC.

By harnessing the fruits of the intense research and development of the mobile phone industry, the STRaND programme intends to trace Moore's law much more closely than other satellite development programmes. An interesting aside statistic is that the Google Nexus One in terms of processing power is approximately 30 MFLOPS, or roughly equivalent to the power of a Cray CDC7600 [22], the premier supercomputer of the early 1970s.

By maintaining the close ties with the University of Surrey with the STRaND programme, SSTL benefits from the continuous pioneering and advanced technological research projects at the Space Centre, and the University benefits from regular opportunities for practical demonstrations of new technologies.

The multiple roles that can be performed by the mobile phone (OBC, 5V power supply via the USB, wireless communication, mass data storage, imaging, magnetometer-based attitude determination etc.) has allowed for a certain amount of flexibility in the mission CONOPs planning and experimental scope creep. Ultimately, the capability of the original system had enough margin "built-in" to cope with the inevitable mission creep that occurs in many missions. The difference with the STRaND-1 mission however is that the margin has meant that although the scope of the mission and the number of planned experiments has increased since the initial design, there has been minimal additional work required to meet the new requirements.

Comparison to other similar CubeSat missions

As can be seen from table IV, the performance and capabilities of STRaND-1 are ambitious when compared against other 3U CubeSats well known in the community. Significant differences in the timeframe in which the satellites were developed should be noted, however. STRaND-1 uses some COTS technologies that were not available when the other satellites were in development, and so the table should be regarded as a reflection on the global trend in CubeSat capabilities.

Satellite	**Delfi C3**	**Delfi N3XT**	**Cute 1.7 APDII**	**CanX-2**	**STRaND-1**
3-Axis stabilised	No	Yes	Yes (Mag)	Yes	Yes
Processor Type	RISC	RISC	ARM	ARM	ARM
Clock Speed	7.4 MHz	7.4 MHz	400 MHz	15 MHz	1000 MHz
Wireless experiment	Yes	No	No	No	Yes
Prop Systems	0	1	0	1	2
Camera	No	No	Yes	No	Yes
Highest Comms Frequency	VHF/ UHF	VHF/ UHF	S-Band	S-Band	VHF/ UHF

Table IV: Comparison of CubeSat missions. Data retrieved from respective mission websites

Lessons learnt about running a CubeSat mission on a voluntary basis

The success of the mission development so far is due in large part to the dedication of the team. This is unchanged from the very first Surrey satellite UoSAT-1, where the low-cost satellite engineering approach was surmised by Sir Martin Sweeting to only be possible with:

"a team that exhibits:

- A high degree of motivation, determination and endurance
- Above-average multi-disciplinary technical capability
- Geographic compactness
- Limited numbers to ensure effective communication" [23].

The lesson here is that some rules are set-in-stone for effective, low-cost satellite engineering, funded-project or not, and is a further confirmation of an approach that SSTL has used over three decades. It is

only with the small integrated team approach that onerous documentation can be avoided with impunity.

Another lesson is the identification of the technical tasks that are best achieved using a single large block of time, and the tasks that can be "spread" over many weeks spending a little time every day. For example, intricate work requiring detailed focus such as PCB design or software development are tasks that were identified as being better performed in large chunks of time (for example half a day or more continuously on the task), whereas system engineering, CAD design and project management are more suited to dip-in, dip-out work patterns.

It has been noted that the flexible work arrangements both at SSTL and SSC make finding the time for a voluntary mission possible, and it is only through the support of line management on the flexible working that volunteers can make real contributions to the mission.

The STRaND programme has already achieved its aim of maintaining and strengthening ties between SSTL and SSC. The programme has indeed actually exceeded this goal and has acted as a vehicle for familiarisation, providing newly-joined staff at both organisations an excellent framework to meet and get to know their co-workers in a supportive environment. For this reason STRaND can be considered a "social satellite" programme.

Mentors on the programme include experts in their particular field imparting knowledge and experience to volunteers who may have little existing knowledge. This intentional use of volunteers in areas outside of their normal field will ultimately result in staff that have increased appreciation for the interdisciplinary nature of space engineering.

The mentor's role is intentionally informal. The aim is for a "little and often" approach, where the mentor also acts as a reviewer for work. SSTL and SSC benefit from retaining a significant number of long-term staff, often with over 20 years of Surrey Space experience. The STRaND programme enables these experts to impart their knowledge to the very newest recruits.

Initially the STRaND mentoring scheme was defined in a formal way, and each volunteer was assigned a mentor. It was found however that some mentors were more flexible than others, or the time commitments for the mentor changed etc., and the original framework did not operate effectively. The onus was then put on the volunteers to find their own mentors in the company or in the university (often more than one mentor per volunteer), which has worked well. The lesson here is that if volunteers are empowered and encouraged to work autonomously, and the message to the entire organisation is that learning on the STRaND programme is important to the organisation, then volunteer/mentor pairs arrange themselves in a more appropriate manner.

In such a rapid and dynamic development programme such as STRaND, especially when volunteers are involved who are learning new skills and are not necessarily working on the mission at the same time, fast and efficient communication is paramount. To this day subtleties in the design change, and without resorting to formal and onerous configuration control techniques, misunderstandings on the technical design could lead to operational failure.

The project has tried to adopt techniques used very commonly in the software development industry, using wikis, instant messaging and SVN repositories with some success. These techniques have allowed for great freedom in the way information is shared, which contrasts against some of the formal techniques used in the space industry (for example requirements tracking and formal verification methods). The need for an efficient way of sharing 3D models and designs with engineers who do not have CAD software – *in a simple and low-cost manner* – has been identified.

"Cloud computing" methods where living documents, calculation models, interface information etc. are stored in the cloud were trialled as part of the STRaND-1 programme but the service was found to be immature for the project needs. The service will be trialled again for STRaND-2 now that various cloud services from large providers like Google and Microsoft have been around the development cycle a few times.

It should be noted however, that for mentoring and knowledge management, the value of the "water-cooler conversation" should not be under-estimated. STRaND volunteers are actively encouraged to ask questions in the more informal parts of the work environment to anyone in SSTL or SSC, as solutions can and have been demonstrated to arise from the most unexpected of places or people, and sustains interest and support for the programme in the larger organisations.

The flexible knowledge management and information sharing techniques trialled by the STRaND programme have only been enabled through a tolerant IT support service who have allowed the team a certain amount of leeway. The IT support infrastructure for STRaND-1 was effectively "off-grid" in terms of using the corporate infrastructure, although still technically inside the normal SSTL network. Although IT support from the corporate team is important, a rapid and flexible programme like STRaND benefits from volunteers with IT-support skills, and so a degree of "Do-It-Yourself" IT support is possible, which has been invaluable. The lesson here is that providing a rapid development team the power to mould their own information infrastructure instead of being forced to use the "one size fits all" infrastructure provided by the corporate network is an effective way to tighten one's

own OODA loop [24], and so long as the corporate IT group is involved with the DIY approach, the two systems can coexist in a stable manner.

There is an inherent tension between the goal of training on STRaND and the ideal of rapid development. As volunteers are expected to learn new skills, the project has to contend with a large number of learning curves, which in turn have an impact on the schedule. The nominal bias is for training outcomes to have a higher priority than schedule, and a number of schedule delays in the STRaND programme have benefitted volunteers. This is a perfectly acceptable trade in the STRaND programme.

In some cases however the schedule cost of a learning curve could be so extreme (for example complex, composite-based stress analysis) that it is reasonable for expert effort to be "bought". In these case to ensure there is not a total loss of learning outcomes; the volunteer is expected to shadow the expert as closely as possible.

The voluntary nature of the project means that inter-dependencies between various unit developments have to be managed even more carefully than for a funded project, because having the time for simultaneous development cannot be guaranteed. It is rare for the "free" time of one volunteer to coincide with the "free" time of another engineer on a related unit, and so critical paths on the development schedule start appearing that do not necessarily occur on other missions. Only close monitoring and flexibility from all parties can help alleviate this consequence of voluntary involvement missions.

Technical lessons learnt

The Android smartphone technology has been found to greatly exceed current on-board capabilities in cost, integration, and functionality. After further radiation experiments which will be carried out in October 2011, a greater understanding of the technology's limitations will be known. The software's ease-of-use and distributed nature is initially hard to understand compared to typical satellite systems which tend to be monolithically-compiled in nature, but can be easily customisable using common and well known techniques.

The original design of the pulsed plasma thrusters was found to induce large voltage in harness cables that were in proximity to the thruster. Additionally, a significant ripple in the power supply was observed after each pulse. Design iterations included filters for the power interface to the rest of the satellite and copper plating of the outer thruster casing, which has reduced PPT-induced interference to acceptable levels.

The size of the satellite and the higher risk profile of the mission have meant that thermal design has lowered in priority compared to a commercial SSTL mission where a thermal analysis is standard. Additionally, as there is significant scope to change the CONOPs during the mission, an in-depth power analysis and "day-in-the-life" power analysis has been replaced with a much more simplified and higher-level analysis of orbit average power. These are examples of technical analysis that have been found can be de-scoped from the STRaND-1 mission because:

- The mission is not commercial and there are no advanced satellite capabilities that the team are contractually bound to ensure.
- The satellite is physically small enough that thermally the system is relatively simple and is assumed to passively reach a stable equilibrium state.
- The satellite base activities draw such a low power that the survival of the satellite can be demonstrated with a basic power model, and so any "higher" activities can be considered bonus.

De-scoping of in-depth thermal and power analysis has dramatically simplified the system design effort.

Future plans

The Mission Concepts team at SSTL will conduct a feasibility study in to STRaND-2 in the months immediately following IAC2011, taking inputs from the SSC. The aim is for a notional launch date in the first half of 2013. It is anticipated that STRaND-2 may well be another 3U CubeSat, however the programme is not bound to the CubeSat standard and future STRaNDs may not be CubeSats if the form factor is found to be restrictive for any particular mission goal.

The general scope of STRaND-2 will be similar to STRaND-1 in that it will be a combination of learning tasks for staff, demonstrations of some terrestrial COTS technologies, and flight opportunities for some advanced Surrey university research projects. The combination of these three "pillars" of STRaND missions is believed to be a framework that satisfies the simultaneous needs for rapid mission exposure for training and rapid, ambitious technology development at Surrey, and for this reason alone the STRaND programme should be considered a new but permanent tradition in the long history of space technology development at the Surrey Space Centre and Surrey Satellite Technology Ltd.

REFERENCES

[1] Underwood, C., Richardson, G., Savignol, J (2001) "SNAP-1: A low cost modular COTS-based nano-satellite - Design, construction, launch and early operations phase" *Fifteenth AIAA/USU Conference on Small Satellites, Logan, Utah*

[2] Bridges, C.P., Kenyon, S., Underwood, C., Sweeting M.N. (2011) "STRaND: Surrey Training Research and Nanosatellite Demonstrator" *1st IAA Conference on University Satellite Mission and CubeSat Workshop January 24-29, 2011 Rome, Italy*

[3] BBC News - Mobile phone to blast into orbit, Website, 24/01/2011, Available online: http://www.bbc.co.uk/news/science-environment-12253228 (last accessed 25/09/2011)

[4] Mr. H Heidt, Prof. Puig-Suari J., Prof. Moore A.S., Prof. Nakasuka S, Prof. Twiggs R.J., "CubeSat: A new Generation of Picosatellite for Education and Industry Low-Cost Space Experimentation" *Fourteenth AIAA/USU Conference on Small Satellites, Logan, Utah*

[5] Pumpkin Inc., CubeSat Kit – Design & CAD Models, Website, Available online: http://www.cubesatkit.com/content/design.html (last accessed 25.09.2011)

[6] Gomspace, NanoMind A702/A712 Datasheet, GS-DS-NM702-2.1

[7] Clyde Space, 3U CubeSat Power System User Manual, Manual, Revision E, October 2008.

[8] Clyde Space, CubeSat 3U Battery Board User Manual, Manual, Revision F, June 2009.

[9] Surrey Satellite Technology Ltd., SGR-05U Space GPS Receiver, Website, Available online: http://www.sst-us.com/shop/subsystems/gps/sgr-05u---space-gps-receiver (last accessed 06.09.2011)

[10] Digi International Inc., ConnectCore™ 9C/Wi-9C Hardware Reference, Document, Available online: http://ftp1.digi.com/support/documentation/90000789_D.pdf (last accessed 06.09.2011)

[11] Visagie, L., Steyn, W.H., Lappas, V., (2011) "MODULAR SIMULATION AND VISUALISATION APPLICATION FOR SATELLITE ATTITUDE CONTROL" *62nd International Astronautical Congress, Cape Town, SA., IAC-11-C1.6.1*

[12] Martel F., P.K. Pal and M.Psiaki, (1988) "Active Magnetic Control System for Gravity Gradient Stabilized Spacecraft", *Second Annual AIAA/USU Conference on Small Satellites, Logan, Utah*

[13] Thomson W.T., "Spin Stabilization of Attitude against Gravity Torque", Journal of Astronautical Science, No.9, pp.31-33, 1962

[14] Steyn W.H., "A Multi-Mode Attitude Determination and Control System for Small Satellites", Ph.D. Thesis (Engineering), University of Stellenbosch, December 1995

[15] Steyn, W.H, "AN ATTITUDE CONTROL SYSTEM FOR SUMBANDILASAT AN EARTH OBSERVATION SATELLITE", *Proceedings of the IAA Symposium on Small Satellite Systems and Services (4S), Rhodes, Greece, May 26-30, 2008*, ESA SP-660, August 2008

[16] Google Inc., Nexus One – Google Phone Gallery, Website, Available online: http://www.google.com/phone/detail/nexus-one (last accessed 06.09.2011)

[17] BBC News – Surrey University's phone-in-space sparks app contest, Website, 02.08.2011, Available online: http://www.bbc.co.uk/news/uk-england-surrey-14378673 (last accessed 06.09.2011)

[18] Hummingbird Website: https://github.com/JohannesKlug/hummingbird/wiki, last accessed 28/09/2011

[19] S-Android, Space Android: Android for Space Subsystems, http://code.google.com/p/s-android

[20] Wallace, R.S., "The anatomy of A.L.I.C.E", Chapter 13, *Parsing the Turing Test*, Springer, 2008.

[21] NASA Goddard Space Flight Center, (2005) "General Environmental Verification Standard (GEVS)", GSFC-STD-7000

[22] Bell, G., "Presentation of the CDC 7600 and other machines designed by Seymour Cray", 1997, *Seymour Cray Lecture Series, University of Minnesota*. Available online: http://research.microsoft.com/en-us/um/people/gbell/craytalk/sld001.htm, last accessed 26/09/2011

[23] Sweeting, M.N., (1982) "UOSAT – An investigation into cost-effective spacecraft engineering", *The Radio and Electronic Engineer*, Vol. 52 #8/9, page 363

[24] Boyd, J.R., (1995) "The Essence of Winning and Losing" Available online: http://www.danford.net/boyd/essence4.htm, last accessed 26/09/2011