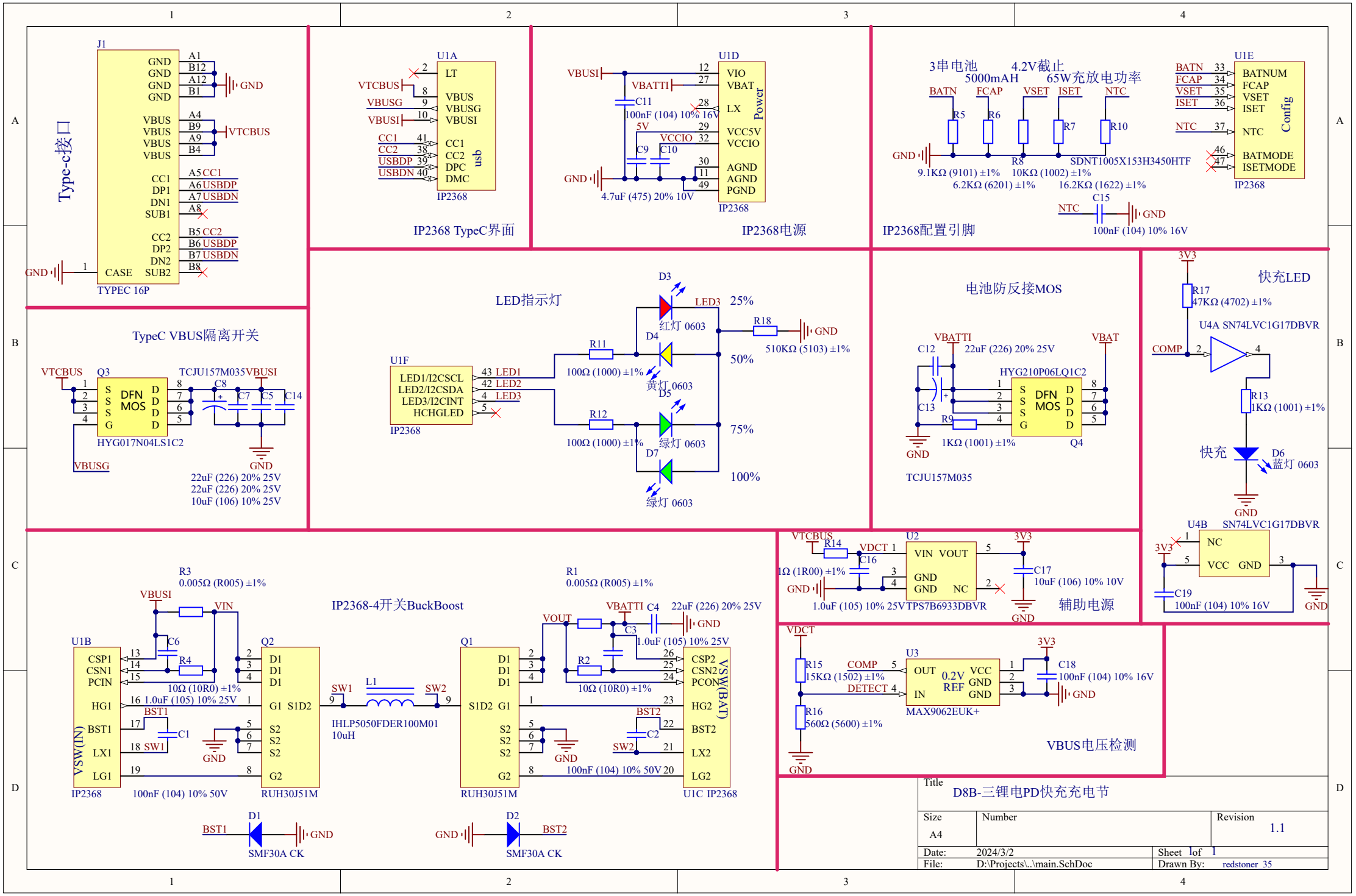
Type-c接口
J1
TYPEC 16P
GND
VTCBUS
CC1
CC2
USBDP
USBDN
U1A
IP2368
usb
IP2368 TypeC界面
U1D
Power
VIO
VBAT
LX
VCC5V
VCCIO
AGND
PGND
VBUSI
VBATTI
C11
100nF (104) 10% 16V
4.7uF (475) 20% 10V
IP2368电源
3串电池
5000mAH
4.2V截止
65W充放电功率
BATN
FCAP
VSET
ISET
NTC
R5
R6
R7
R8
R10
9.1KΩ (9101) ±1%
6.2KΩ (6201) ±1%
10KΩ (1002) ±1%
16.2KΩ (1622) ±1%
SDNT1005X153H3450HTF
C15
100nF (104) 10% 16V
U1E
Config
BATNUM
BATMODE
ISETMODE
IP2368配置引脚
TypeC VBUS隔离开关
Q3
DFN MOS
HYG017N04LS1C2
TCJU157M035
VBUSG
C7
C5
C14
C8
22uF (226) 20% 25V
22uF (226) 20% 25V
10uF (106) 10% 25V
LED指示灯
U1F
LED1/I2CSCL
LED2/I2CSDA
LED3/I2CINT
HCHGLED
LED1
LED2
LED3
D3
D4
D5
D7
红灯 0603
黄灯 0603
绿灯 0603
R11
R12
R18
100Ω (1000) ±1%
510KΩ (5103) ±1%
25%
50%
75%
100%
电池防反接MOS
VBATTI
VBAT
C12
C13
R9
22uF (226) 20% 25V
HYG210P06LQ1C2
1KΩ (1001) ±1%
Q4
TCJU157M035
3V3
快充LED
R17
47KΩ (4702) ±1%
U4A SN74LVC1G17DBVR
COMP
R13
1KΩ (1001) ±1%
快充
D6
蓝灯 0603
U4B SN74LVC1G17DBVR
NC
VCC
C19
100nF (104) 10% 16V
R3
0.005Ω (R005) ±1%
R1
0.005Ω (R005) ±1%
IP2368-4开关BuckBoost
U1B
CSP1
CSN1
PCIN
HG1
BST1
LX1
LG1
VSW(IN)
IP2368
Q2
D1
G1 S1D2
S2
G2
RUH30J51M
Q1
S1D2 G1
U1C IP2368
CSP2
CSN2
PCON
HG2
BST2
LX2
LG2
VSW(BAT)
VIN
VOUT
C6
R4
R2
C1
C2
C3
C4
SW1
SW2
L1
IHLP5050FDER100M01
10uH
10Ω (10R0) ±1%
1.0uF (105) 10% 25V
100nF (104) 10% 50V
D1
D2
SMF30A CK
VTCBUS
R14
VDCT
C16
1Ω (1R00) ±1%
U2
VIN VOUT
GND
NC
C17
10uF (106) 10% 10V
1.0uF (105) 10% 25V
TPS7B6933DBVR
辅助电源
VDCT
R15
15KΩ (1502) ±1%
R16
560Ω (5600) ±1%
COMP
DETECT
U3
OUT
IN
0.2V REF
VCC
MAX9062EUK+
C18
100nF (104) 10% 16V
VBUS电压检测
Title
D8B-三锂电PD快充充电节
Size
A4
Number
Revision
1.1
Date: 2024/3/2
Sheet 1 of 1
File: D:\Projects\..\main.SchDoc
Drawn By: redstoner_35