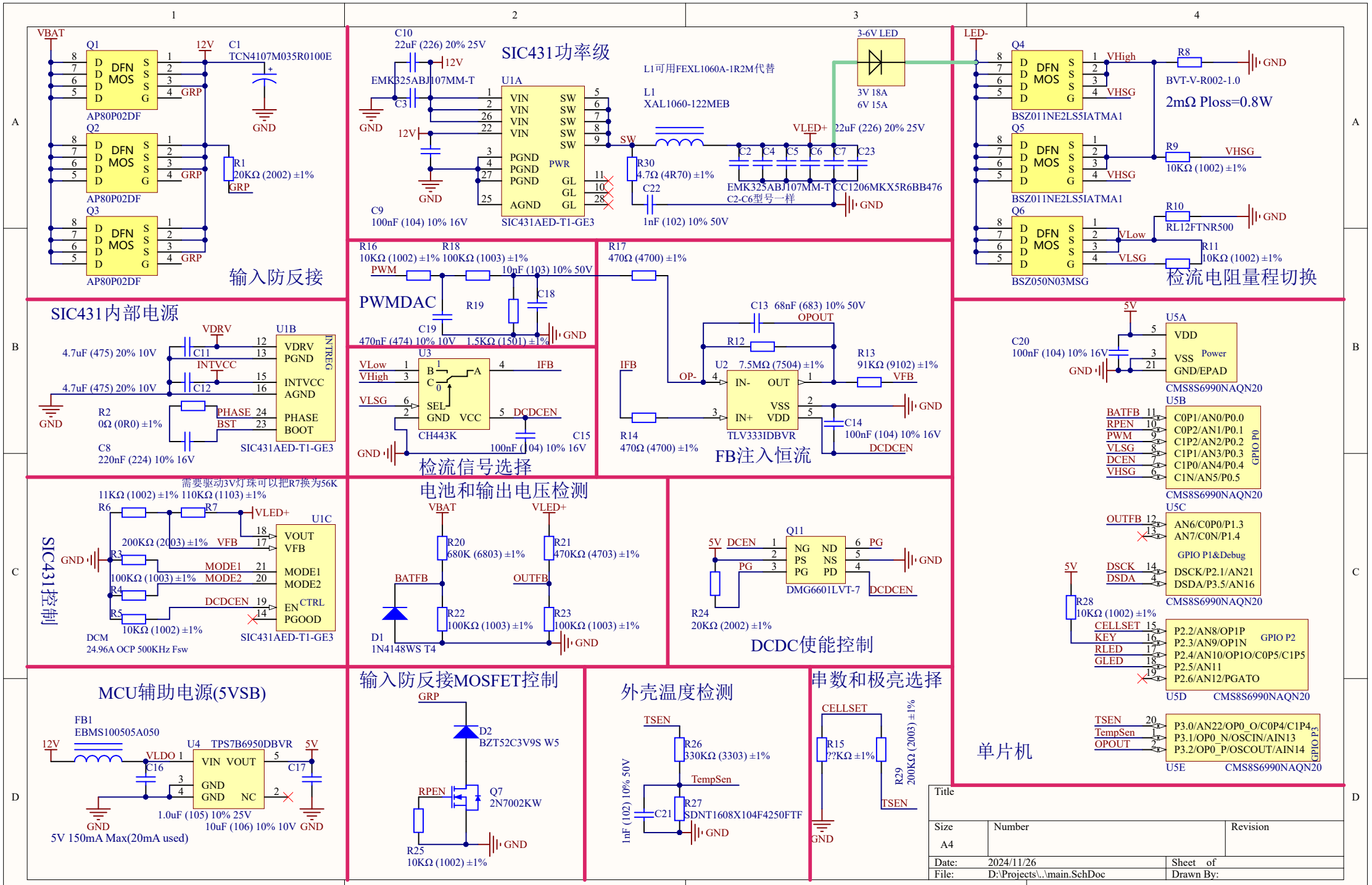
输入防反接
Q1
Q2
Q3
AP80P02DF
DFN MOS
VBAT
12V
C1
TCN4107M035R0100E
GND
GRP
R1
20KΩ (2002) ±1%
SIC431功率级
U1A
SIC431AED-T1-GE3
C10
22uF (226) 20% 25V
EMK325ABJ107MM-T
C3
C9
100nF (104) 10% 16V
L1可用FEXL1060A-1R2M代替
L1
XAL1060-122MEB
3-6V LED
3V 18A
6V 15A
VLED+
22uF (226) 20% 25V
R30
4.7Ω (4R70) ±1%
C22
1nF (102) 10% 50V
EMK325ABJ107MM-T
CC1206MKX5R6BB476
C2-C6型号一样
检流电阻量程切换
Q4
Q5
Q6
BSZ011NE2LS5IATMA1
BSZ050N03MSG
LED-
VHigh
VHSG
VLow
VLSG
R8
BVT-V-R002-1.0
2mΩ Ploss=0.8W
R9
10KΩ (1002) ±1%
R10
RL12FTNR500
R11
10KΩ (1002) ±1%
SIC431内部电源
U1B
VDRV
PGND
INTVCC
AGND
PHASE
BOOT
INTREG
4.7uF (475) 20% 10V
C11
C12
R2
0Ω (0R0) ±1%
C8
220nF (224) 10% 16V
PWMDAC
R16
10KΩ (1002) ±1%
R18
100KΩ (1003) ±1%
PWM
10nF (103) 10% 50V
R19
C18
C19
470nF (474) 10% 10V
1.5KΩ (1501) ±1%
R17
470Ω (4700) ±1%
检流信号选择
U3
CH443K
VLow
VHigh
VLSG
IFB
DCDCEN
SEL
GND
VCC
C15
100nF (104) 10% 16V
FB注入恒流
U2
TLV333IDBVR
C13 68nF (683) 10% 50V
OPOUT
R12
7.5MΩ (7504) ±1%
R13
91KΩ (9102) ±1%
VFB
OP-
IN-
OUT
VSS
IN+
VDD
C14
100nF (104) 10% 16V
R14
470Ω (4700) ±1%
单片机
U5A
U5B
U5C
U5D
U5E
CMS8S6990NAQN20
VDD
VSS
GND/EPAD
Power
C20
100nF (104) 10% 16V
C0P1/AN0/P0.0
C0P2/AN1/P0.1
C1P2/AN2/P0.2
C1P1/AN3/P0.3
C1P0/AN4/P0.4
C1N/AN5/P0.5
GPIO P0
BATFB
RPEN
PWM
VLSG
DCEN
VHSG
AN6/C0P0/P1.3
AN7/C0N/P1.4
GPIO P1&Debug
DSCK/P2.1/AN21
DSDA/P3.5/AN16
OUTFB
DSCK
DSDA
R28
10KΩ (1002) ±1%
P2.2/AN8/OP1P
P2.3/AN9/OP1N
P2.4/AN10/OP1O/C0P5/C1P5
P2.5/AN11
P2.6/AN12/PGATO
GPIO P2
CELLSET
KEY
RLED
GLED
P3.0/AN22/OP0_O/C0P4/C1P4
P3.1/OP0_N/OSCIN/AIN13
P3.2/OP0_P/OSCOUT/AIN14
GPIO P3
TSEN
TempSen
OPOUT
SIC431控制
需要驱动3V灯珠可以把R7换为56K
11KΩ (1002) ±1%
110KΩ (1103) ±1%
R6
R7
U1C
VOUT
VFB
MODE1
MODE2
EN
CTRL
PGOOD
200KΩ (2003) ±1%
100KΩ (1003) ±1%
R3
R4
R5
10KΩ (1002) ±1%
DCM
24.96A OCP 500KHz Fsw
电池和输出电压检测
R20
680K (6803) ±1%
R21
470KΩ (4703) ±1%
R22
100KΩ (1003) ±1%
R23
100KΩ (1003) ±1%
D1
1N4148WS T4
DCDC使能控制
Q11
DMG6601LVT-7
NG
PS
PG
ND
NS
PD
5V
DCEN
R24
20KΩ (2002) ±1%
MCU辅助电源(5VSB)
FB1
EBMS100505A050
U4
TPS7B6950DBVR
VIN
VOUT
GND
NC
VLDO
C16
C17
1.0uF (105) 10% 25V
10uF (106) 10% 10V
5V 150mA Max(20mA used)
输入防反接MOSFET控制
D2
BZT52C3V9S W5
Q7
2N7002KW
R25
10KΩ (1002) ±1%
外壳温度检测
R26
330KΩ (3303) ±1%
R27
SDNT1608X104F4250FTF
C21
1nF (102) 10% 50V
串数和极亮选择
R15
??KΩ ±1%
R29
200KΩ (2003) ±1%
Title
Size
A4
Number
Revision
Date: 2024/11/26
File: D:\Projects\..\main.SchDoc
Sheet of
Drawn By: