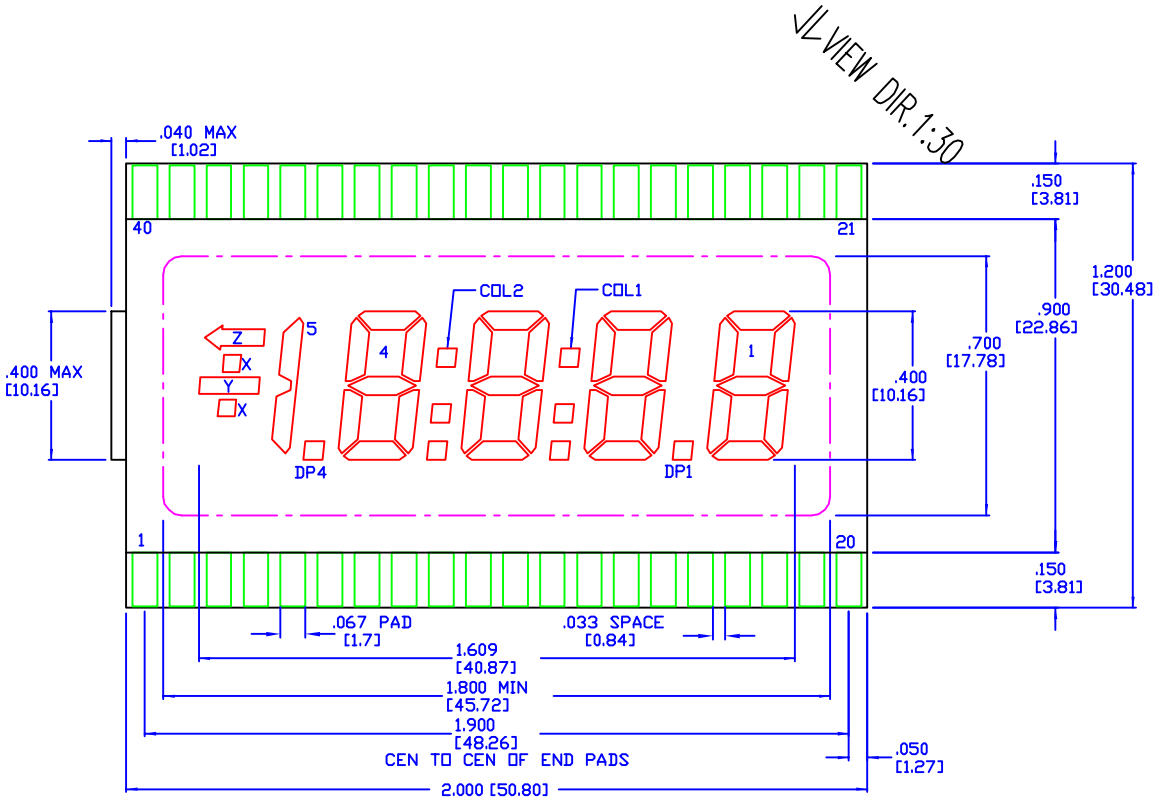

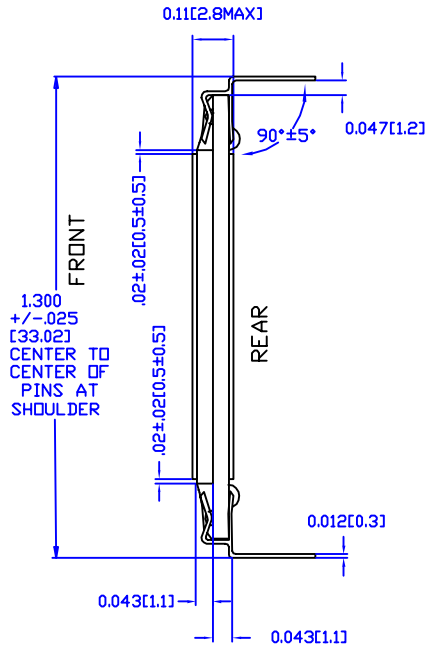

PIN	FUNC
01	BP
02	Y
03	5B,5C
04	DP4
05	4E
06	4D
07	4C
08	DP3
09	3E
10	3D
11	3C
12	DP2
13	2E
14	2D
15	2C
16	DP1
17	1E
18	1D
19	1C
20	1B

PIN	FUNC
40	BP
39	X
38	Z
37	4G
36	4F
35	4A
34	4B
33	COL2
32	3G
31	3F
30	3A
29	3B
28	COL1
27	2G
26	2F
25	2A
24	2B
23	1G
22	1F
21	1A

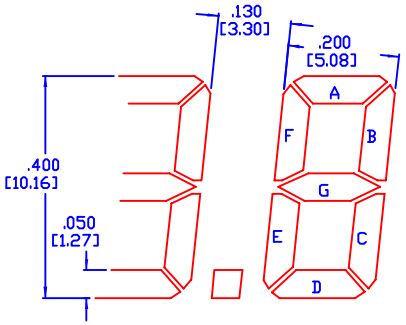

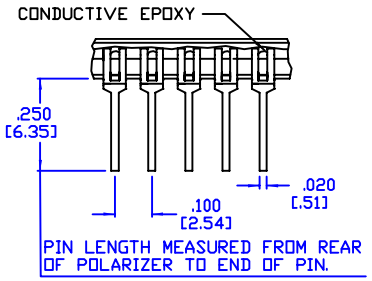

NOTE:

1. TN, REFLECTIVE, POSITIVE IMAGE (BLACK CHARACTERS - LIGHT BACKROUND).
2. OPERATING TEMP: -40 TO +113 DEG C.
3. WIDE FIELD OF VIEW.
4. FRONT POLARIZER TO BE VERTICAL TO BE COMPATIBLE WITH POLARIZED SUNGLASSES.
5. VIEW ANGLE: 1:30
6. RoHS COMPLIANT.
7. STATIC DRIVE

REV	DESCRIPTION	DATE	BY
-	-	-	-

LXD
LIQUID CRYSTAL DISPLAYS
www.lxdinc.com
7300 ACC BLVD.
RALEIGH, NC. 27617
(919) 600-6440
(800) 786-8710

INFORMATION CONTAINED HEREIN IS PROPRIETARY TO LXD, AND MAY NOT BE USED OR DISCLOSED WITHOUT THE WRITTEN PERMISSION OF LXD

UNLESS OTHERWISE SPECIFIED

DESCRIPTION: 4.5x1 DIGITS

PART NUMBER: H0045A

DRAWING: 2504

REV: -

DRAWN | DATE | SHEET