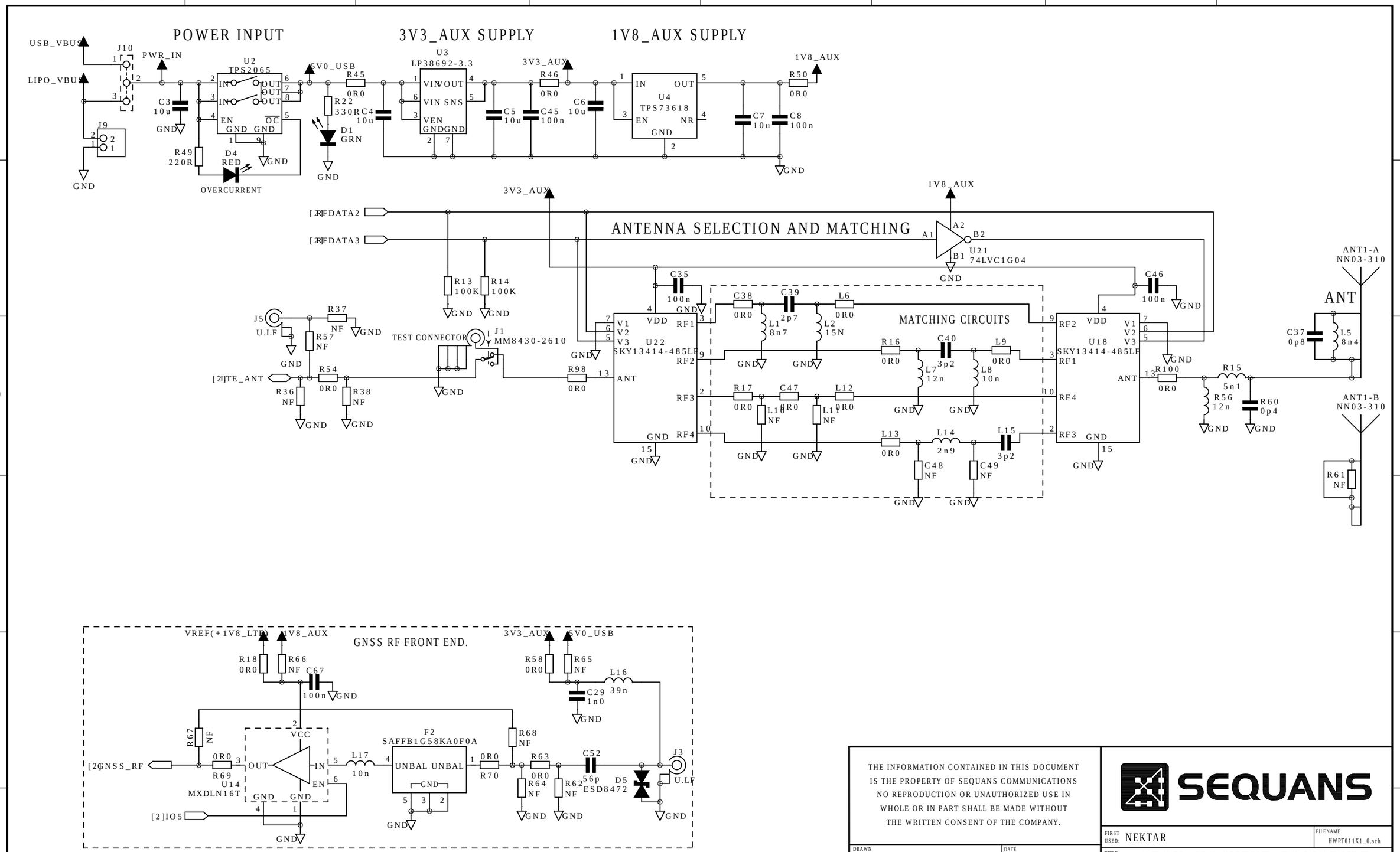

THE INFORMATION CONTAINED IN THIS DOCUMENT IS THE PROPERTY OF SEQUANS COMMUNICATIONS NO REPRODUCTION OR UNAUTHORIZED USE IN WHOLE OR IN PART SHALL BE MADE WITHOUT THE WRITTEN CONSENT OF THE COMPANY.

DRAWN: Waqas Nawaz	DATE: 2023-12-11
CHECKED: <CHECKED>	DATE: <CHK DATE>
ENG. APPROVED: Jean-Marc DELAS	DATE: <APP DATE>
ENG. CHANGE	DATE: 17/01/2024

SEQUANS

FIRST USED: NEKTAR

FILENAME: HWPT011X1_0.sch

TITLE: SEQUANS "NEKTAR" MODULE EXPERIMENTATION SCHEMATIC

DRAWING No: HWPT011X

SIZE: A3 (396 x 273)

SCALE: N.T.S. | ISSUE: 1 | SHEET: 1 of 3

POWER/ANTENNA/INTERFACES

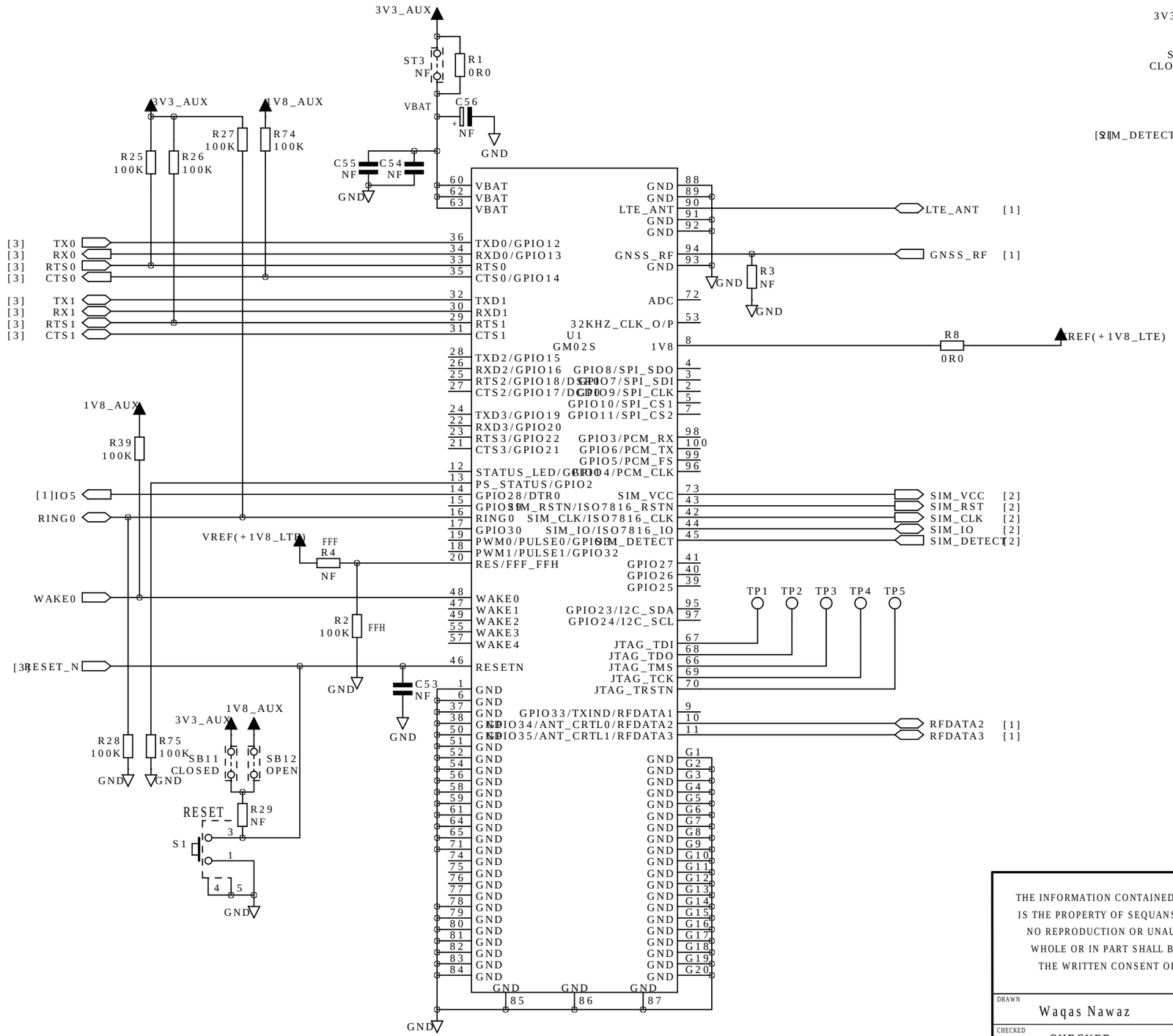
3V3_AUX
ST3
NF
R1
0R0
VBAT
C56
NF
GND
1V8_AUX
R27
100K
R74
100K
R25
100K
R26
100K
C55
NF
C54
NF
U1
GM02S
VBAT
VBAT
VBAT
TXD0/GPIO12
RXD0/GPIO13
RTS0
CTS0/GPIO14
TXD1
RXD1
RTS1
CTS1
TXD2/GPIO15
RXD2/GPIO16
RTS2/GPIO18/DSR0
CTS2/GPIO17/DCD0
TXD3/GPIO19
RXD3/GPIO20
RTS3/GPIO22
CTS3/GPIO21
STATUS_LED/GPIO1
PS_STATUS/GPIO2
GPIO28/DTR0
GPIO29
RING0
GPIO30
PWM0/PULSE0/GPIO31
PWM1/PULSE1/GPIO32
RES/FFF_FFH
WAKE0
WAKE1
WAKE2
WAKE3
WAKE4
RESETN
GND
GND
GND

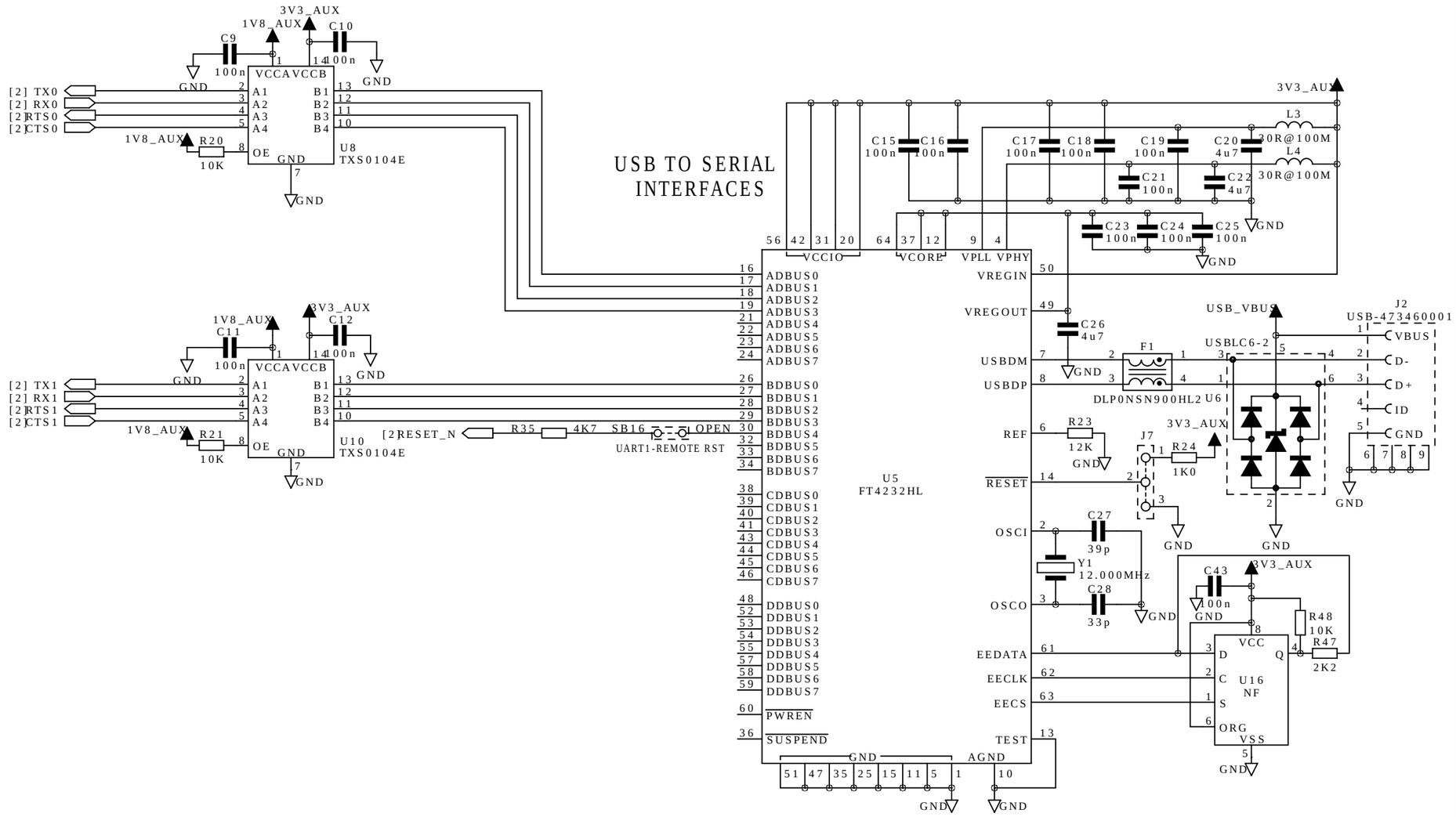

THE INFORMATION CONTAINED IN THIS DOCUMENT IS THE PROPERTY OF SEQUANS COMMUNICATIONS NO REPRODUCTION OR UNAUTHORIZED USE IN WHOLE OR IN PART SHALL BE MADE WITHOUT THE WRITTEN CONSENT OF THE COMPANY.

SEQUANS

DRAWN: Waqas Nawaz	DATE: 2023-12-11	FIRST USED: NEKTAR	FILENAME: HWPT011X1_0.sch
CHECKED: <CHECKED>	DATE: <CHK DATE>	TITLE: SEQUANS "NEKTAR" MODULE EXPERIMENTATION SCHEMATIC	
ENG. APPROVED: Jean-Marc DELAS	DATE: <APP DATE>	DRAWING No: HWPT011X	SIZE: A3
ENG. CHANGE	DATE: 17/01/2024	SCALE: N.T.S. / ISSUE: 1	SHEET: 3 of 3

396 x 273