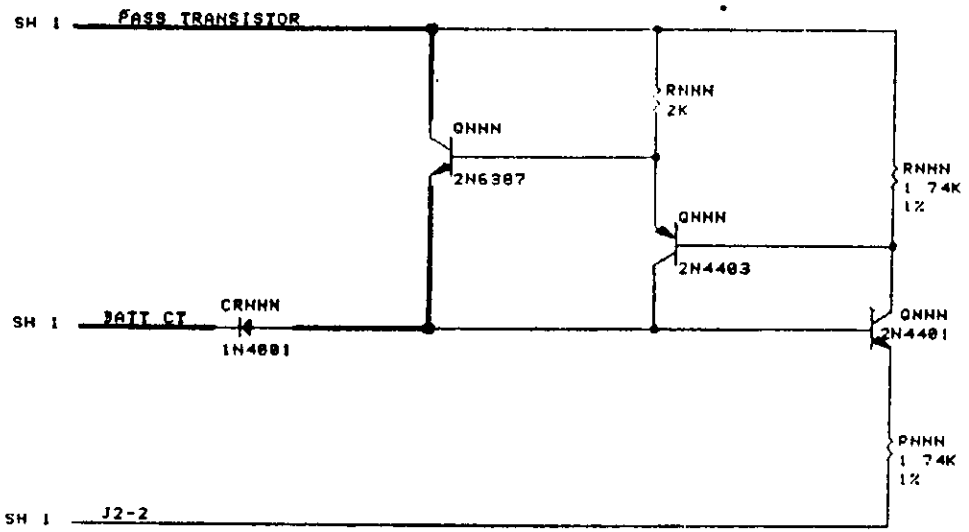

ANDROBOT, INC.			
TITLE: TOPO BATTERY MONITOR			
SIZE: B	CODE:	NUMBER: 11-010175-001	REV: A
DATE: 10/10/83		SHEET 2 OF 3	

REVISIONS				
ZONE	LTR	DESCRIPTION	DATE	APVD
	A	[illegible]	[illegible]	LH
	B	REVISED [illegible]	[illegible]	[illegible]

IC TABLE

IC TYPE	REF DESIGNATOR	QTY	+5V	GND	-5V	+12	+24
8031	U8	1	40	20			
2764	U9	1	28	14			
6116	U7	1	24	12			
4013	U6	1	14	07			
4071	U4.U10	2	14	07			
4584	U3	1	14	07			
74LS00	U11	1	14	07			
74LS05	U12	1	14	07			
74LS373	U5	1	20	10			
LM324	U1.U2	2	04	11			
LM7805	VR1	1	03	02		01	
SG3635	Q1.Q2.Q3.Q4	4					01

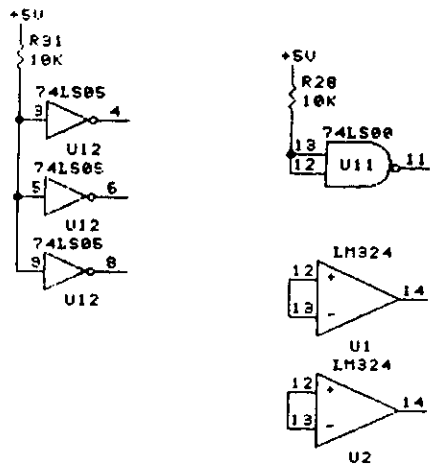

MAR 28 1984

PRE-PRODUCTION RELEASE

NOTE

1 ALL BYPASS CAPACITORS ARE .1UF IN VALUE.
2 DESIGNATORS FOR CAPS ARE C14 THRO C23.

DATE	[illegible]
DWN	JY
APVD	
APVD	
ENGRG	
CHKR	

ANDROBOT, INC.

TITLE TOPO II, MOTION CONTROL CPU COVER SHEET

SIZE	CODE	NUMBER	REV
B		11-010280-001	B

SHEET 1 OF 6

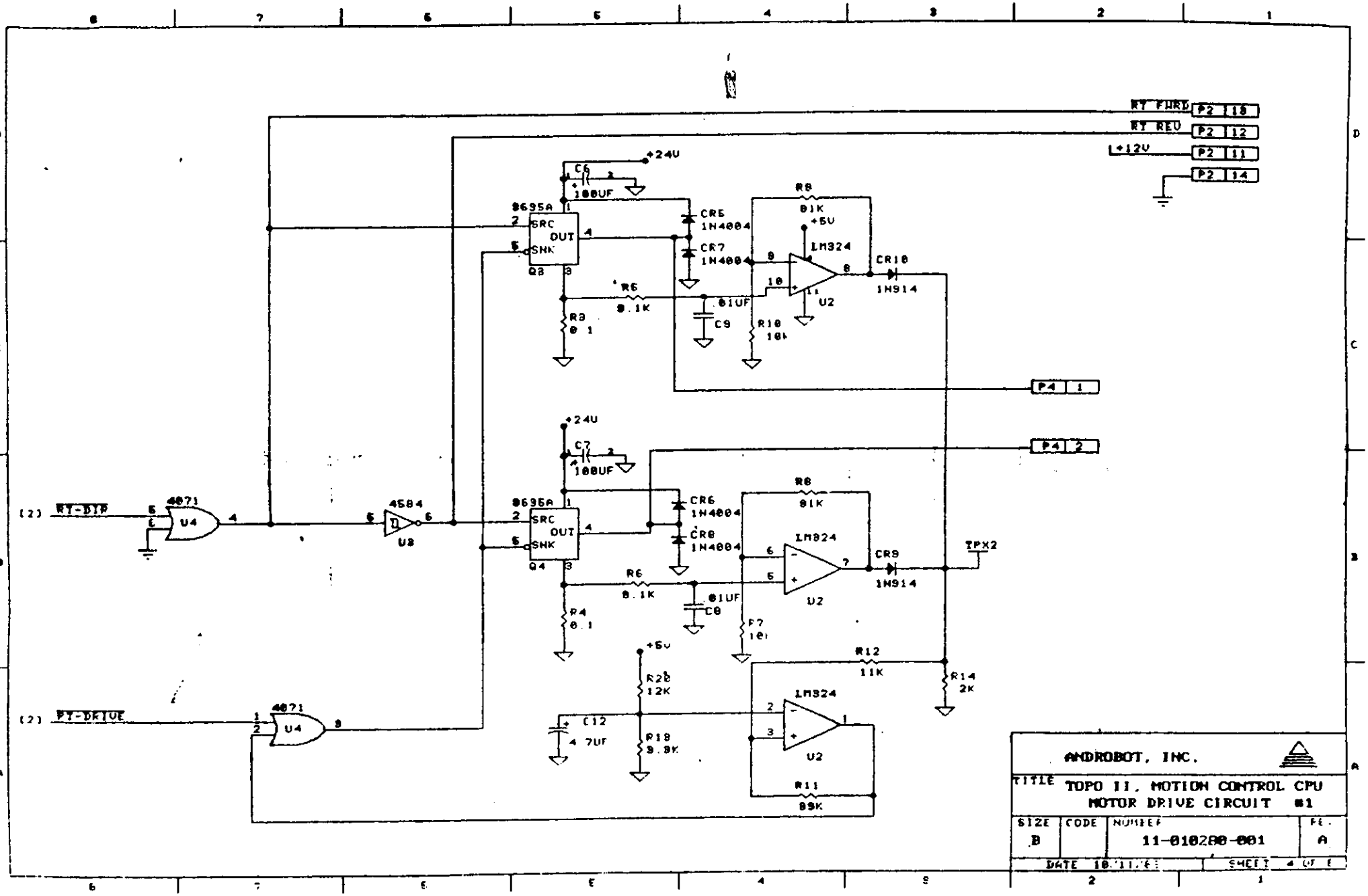

ANDROBOT, INC.			
TITLE: TOPO II, MOTION CONTROL CPU MOTOR DRIVE CIRCUIT #1			
SIZE: B	CODE:	NUMBER: 11-010200-001	REV: A
DATE: 10/11/85		SHEET 4 OF 5	

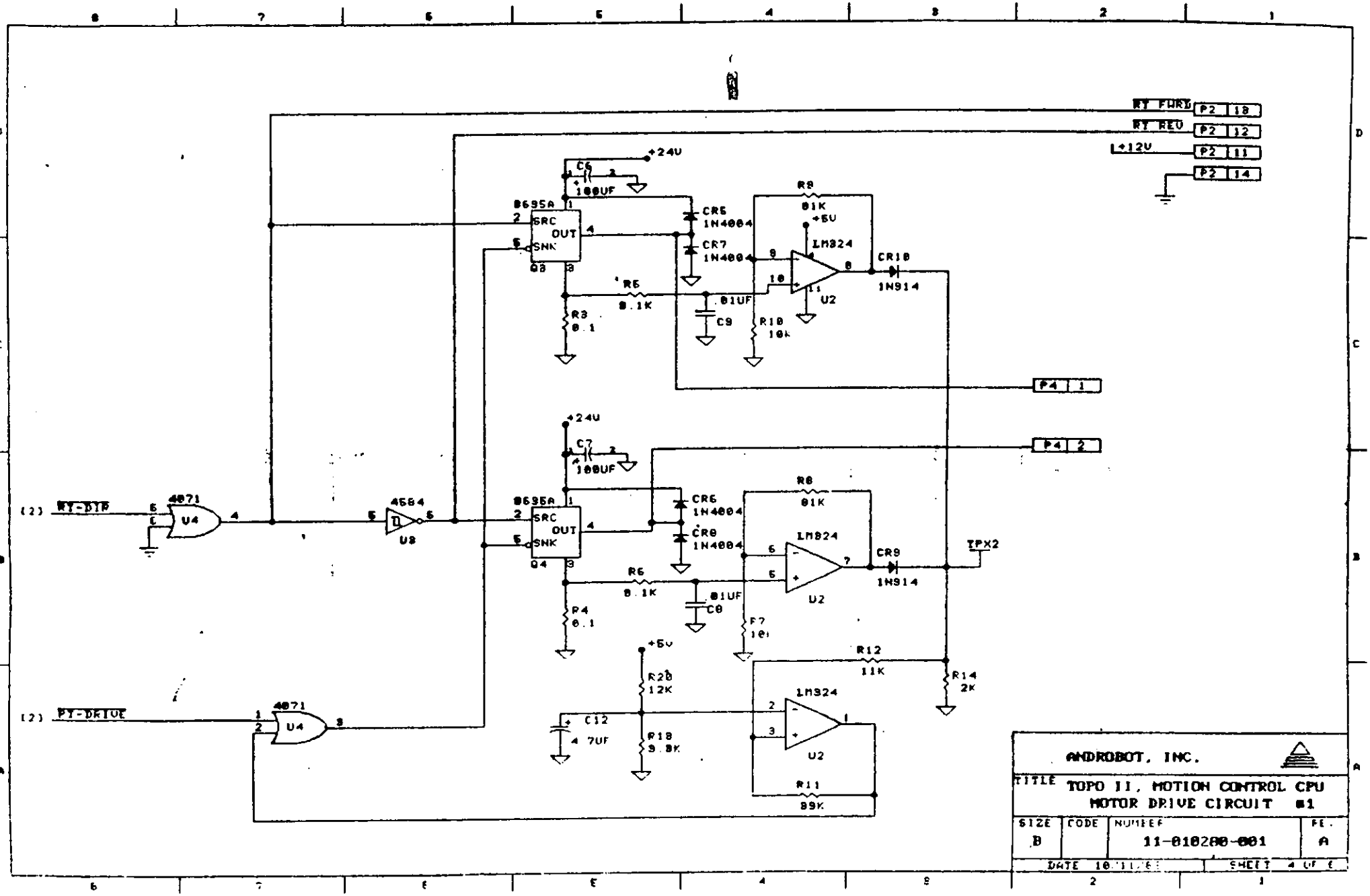
RT FWD
P2 10
RT REV
P2 12
+12V
P2 11
P2 14
+24V
C6
100UF
8695A
SRC
OUT
SNK
Q3
CR5
1N4004
CR7
1N4004
R8
81K
+5V
LM324
CR10
1N914
R6
8.1K
.01UF
C9
R3
8.1
R10
10K
U2
P4 1
+24V
C7
100UF
P4 2
(2) RT-DIR
4071
U4
4584
U3
8695A
SRC
OUT
SNK
Q4
CR6
1N4004
CR8
1N4004
R8
81K
LM324
CR9
1N914
TPX2
R6
8.1K
.01UF
C8
R4
8.1
R7
10K
U2
+5V
R12
11K
R14
2K
R20
12K
C12
4.7UF
R18
9.8K
LM324
U2
R11
89K
(2) RT-DRIVE
4071
U4
ANDROBOT, INC.
TITLE TOPO II, MOTION CONTROL CPU
MOTOR DRIVE CIRCUIT #1
SIZE B
CODE
NUMBER 11-010200-001
REV A
DATE 10/11/85
SHEET 4 OF 6

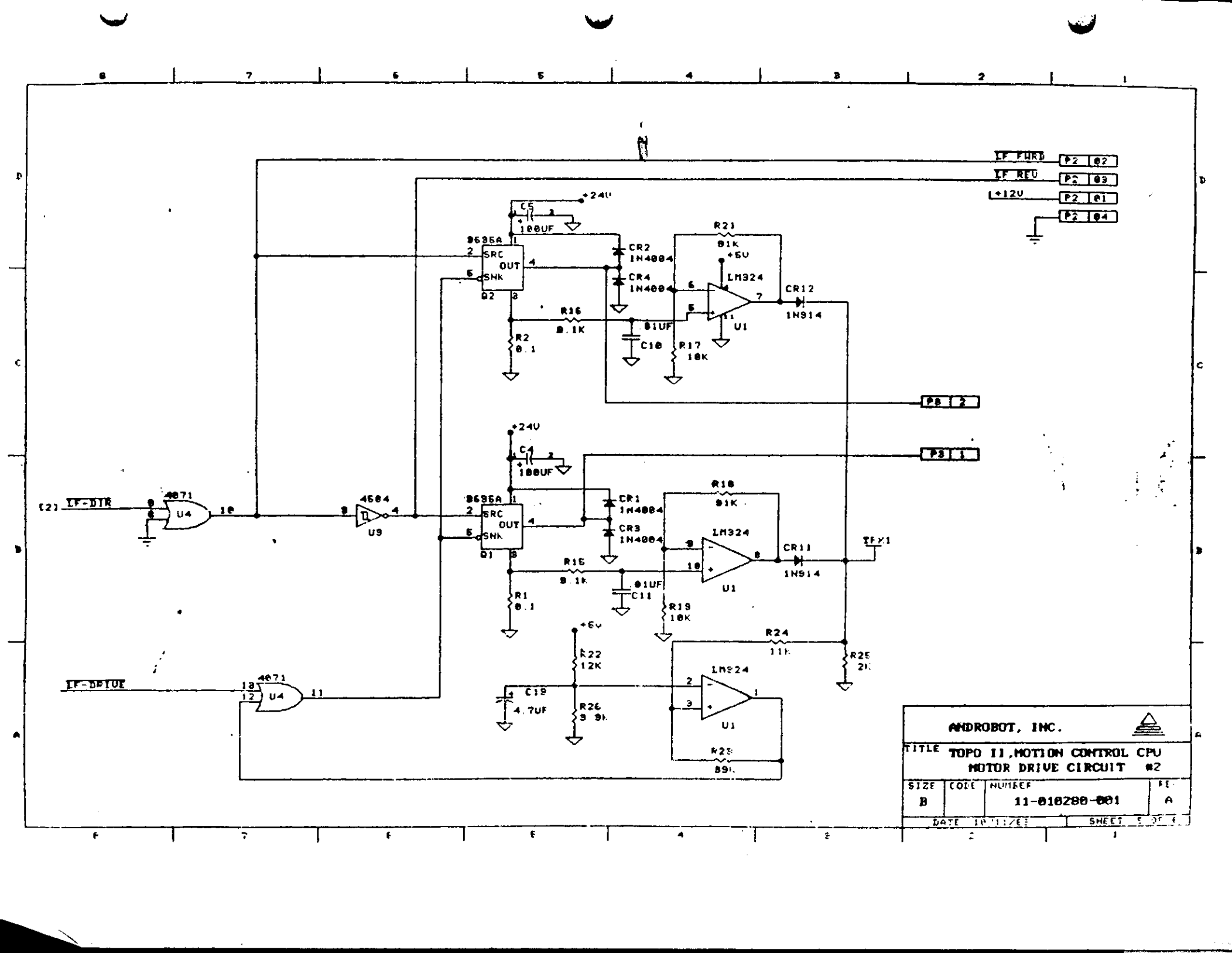
IF FWRD
IF REV
+12V
P2 02
P2 03
P2 01
P2 04
+24V
C5
100UF
9636A
SRC
OUT
SNK
Q2
CR2 IN4004
CR4 IN4004
R21
91K
+5V
LM324
CR12
1N914
U1
R16
9.1K
.01UF
C10
R17
10K
R2
0.1
P8 2
P8 1
C4
100UF
R18
91K
CR1 IN4004
CR3 IN4004
LM324
CR11
1N914
TP1
U1
R15
9.1K
.01UF
C11
R19
10K
R1
0.1
R24
11K
R25
2K
+5V
R22
12K
C19
4.7UF
R26
9.9K
LM324
U1
R23
89K
(2) IF-DIR
4071
U4
4584
U9
IF-DRIVE
4071
U4
ANDROBOT, INC.
TITLE TOPO II, MOTION CONTROL CPU
MOTOR DRIVE CIRCUIT #2
SIZE B
CODE
NUMBER 11-010280-001
REV A
DATE
SHEET

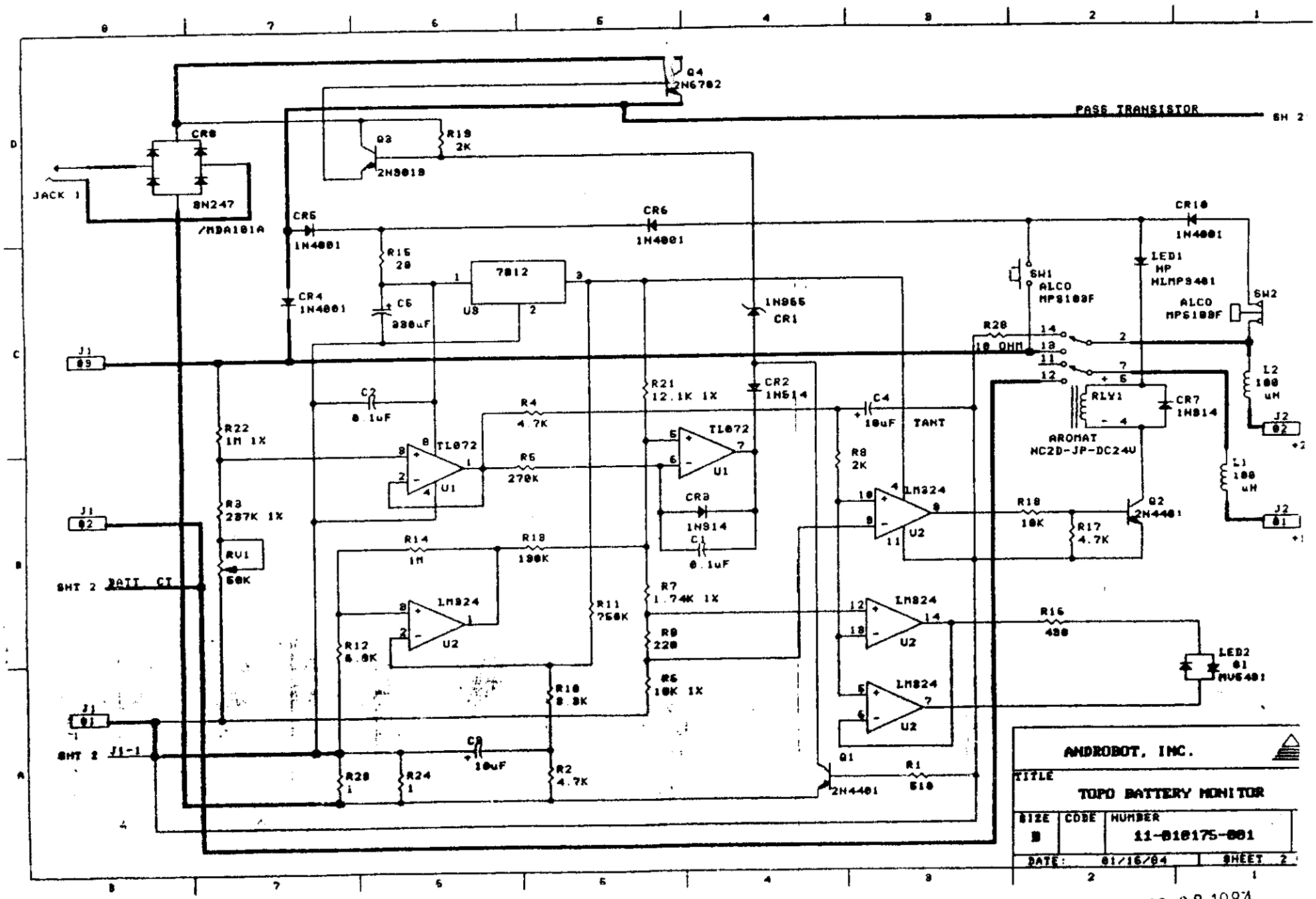

PRE PRODUCTION RELEASE

MAR 28 1984

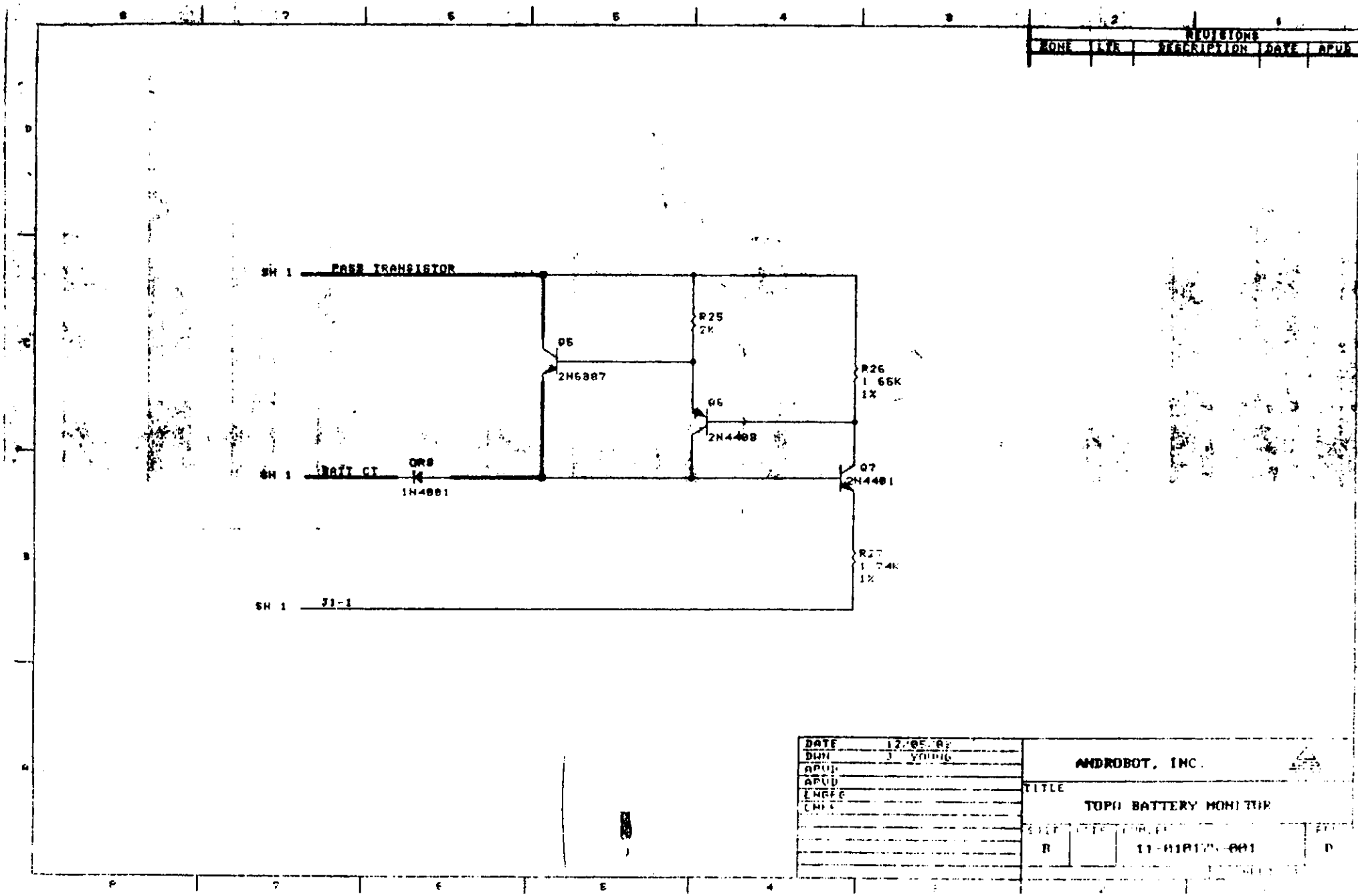
REVISIONS
ZONE
LTR
DESCRIPTION
DATE
APVD
SH 1
PASS TRANSISTOR
Q5
2N6387
R25
2K
Q6
2N4408
R26
1.66K
1%
Q7
2N4401
SH 1
BATT CT
CR8
1N4001
R27
1.74K
1%
SH 1
J1-1
DATE
DWN
APVD
APVD
ENGRG
CHKR
ANDROBOT, INC.
TITLE
TOPO BATTERY MONITOR
B
11-010175-001
D

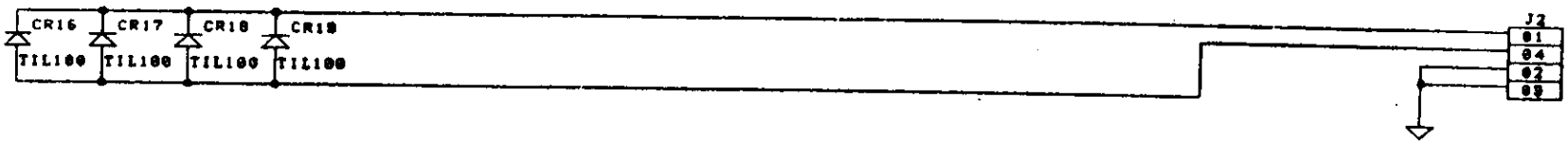

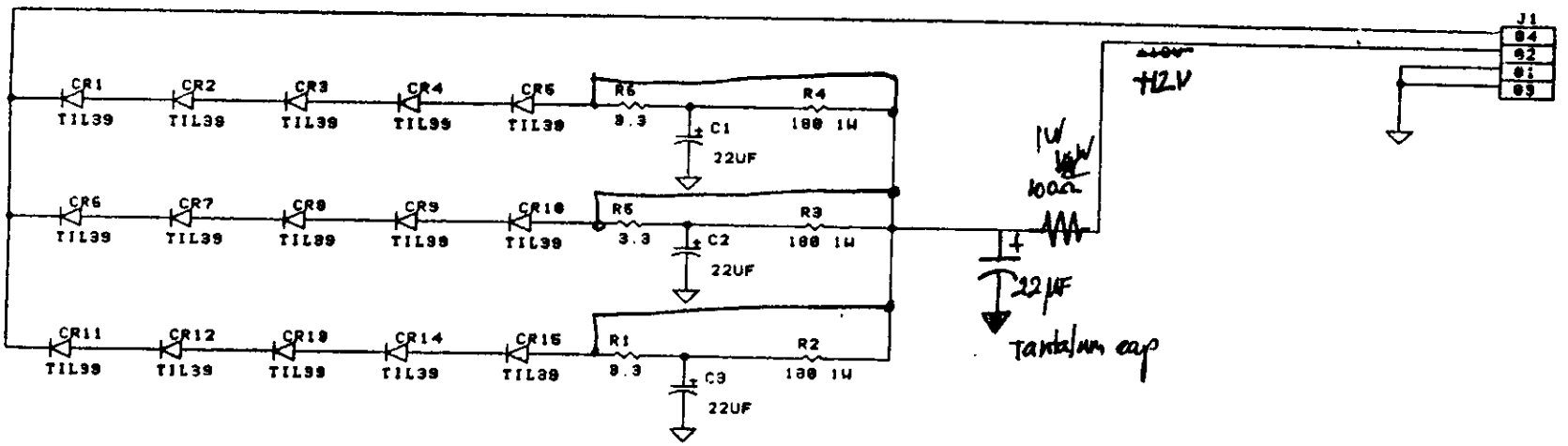

ANDROBOT, INC.			
TITLE: MOBILE TRANCEIVER SENSOR			
SIZE: B	CODE:	NUMBER: 11-810369-001	REV: A
DATE: 10/10/03		SHEET 1 OF 1	

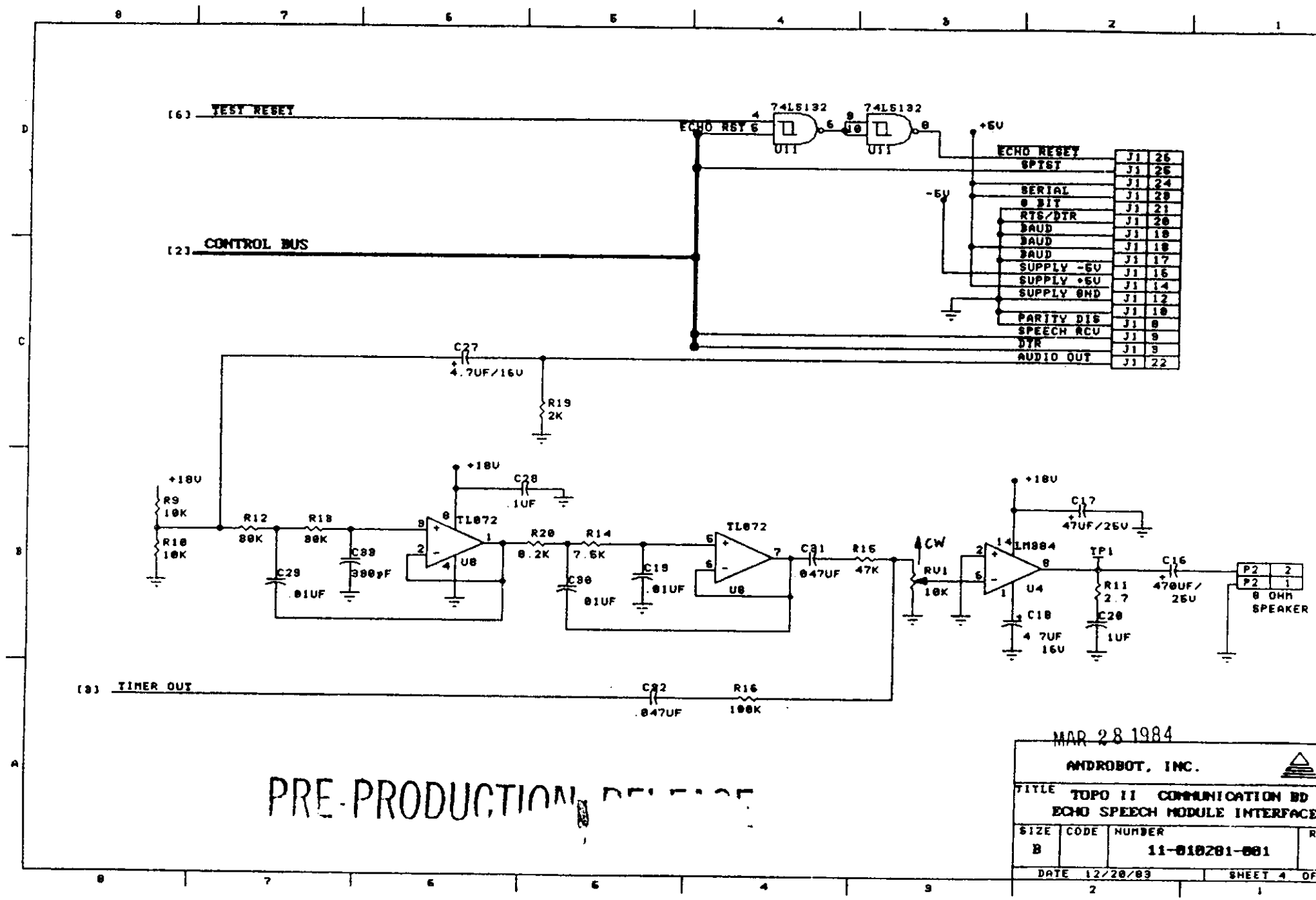

PRE-PRODUCTION RELEASE

MAR 28 1984

ANDROBOT, INC.

TITLE TOPO II COMMUNICATION BD
ECHO SPEECH MODULE INTERFACE

SIZE	CODE	NUMBER	R
B		11-010201-001	

DATE 12/20/83 SHEET 4 OF

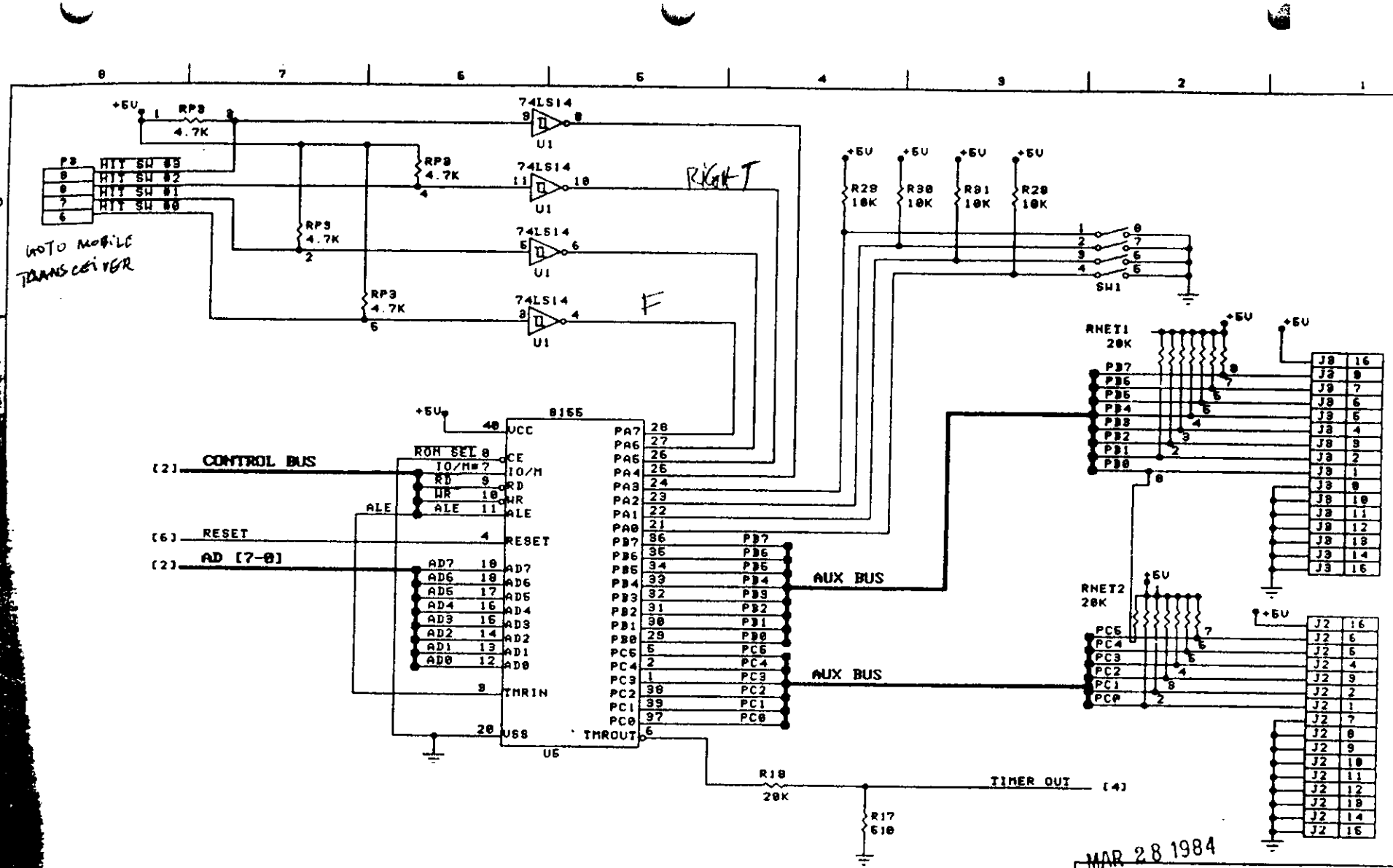

PRE-PRODUCTION RELEASE

MAR 28 1984

ANDROBOT, INC.		
TITLE: TOPO II COMMUNICATION BD PIA INTERFACE HARDWARE		
SIZE: B	CODE:	NUMBER: 11-018281-001
DATE: 12/20/83		SHEET: 8

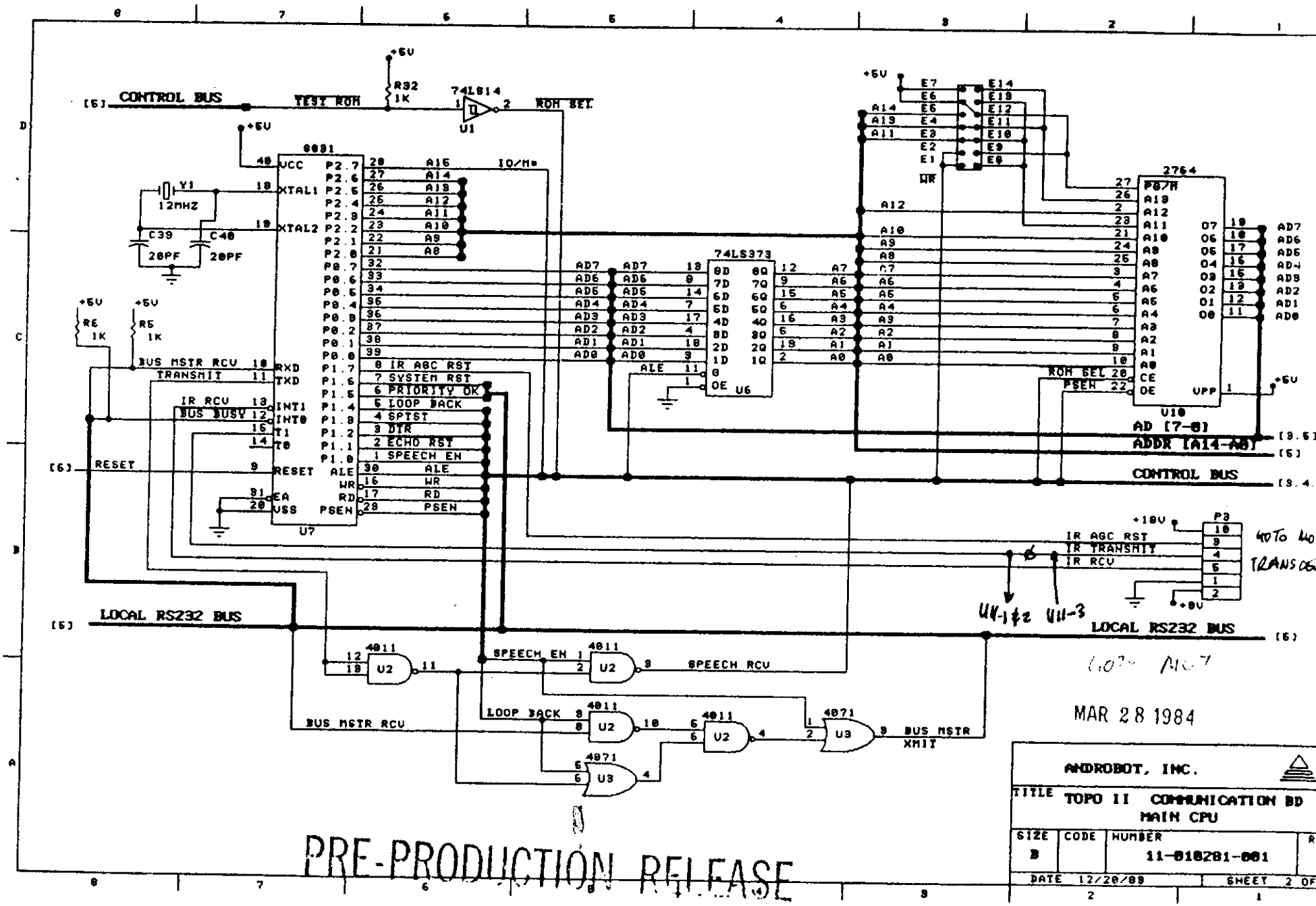
[5] CONTROL BUS
TEST ROM
+5V
R32 1K
74LS14
U1
ROM SEL
8031
VCC
XTAL1
XTAL2
Y1 12MHZ
C39 20PF
C40 20PF
P2.7 A15
P2.6 A14
P2.5 A13
P2.4 A12
P2.3 A11
P2.2 A10
P2.1 A9
P2.0 A8
IO/M#
P0.7 AD7
P0.6 AD6
P0.5 AD5
P0.4 AD4
P0.3 AD3
P0.2 AD2
P0.1 AD1
P0.0 AD0
ALE
74LS373
R6 1K
R5 1K
BUS MSTR RCV
TRANSMIT
RXD
TXD
IR RCV
BUS BUSY
INT1
INT0
T1
T0
[6] RESET
EA
VSS
U7
P1.7 IR AGC RST
P1.6 SYSTEM RST
P1.5 PRIORITY OK
P1.4 LOOP BACK
P1.3 SPTST
P1.2 DTR
P1.1 ECHO RST
P1.0 SPEECH EN
WR
RD
PSEN
2764
U10
AD [7-0]
ADDR [A14-A0]
CONTROL BUS
ROM SEL
P3
IR AGC RST
IR TRANSMIT
IR RCV
40 TO 40 TRANSDUCER
U4-12 U11-3
[5] LOCAL RS232 BUS
4011 U2
SPEECH EN
SPEECH RCV
LOOP BACK
BUS MSTR RCV
4071 U3
BUS MSTR XMIT
MAR 28 1984
ANDROBOT, INC.
TITLE TOPO II COMMUNICATION BD MAIN CPU
SIZE B
CODE
NUMBER 11-018281-001
DATE 12/20/83
SHEET 2 OF
PRE-PRODUCTION RELEASE

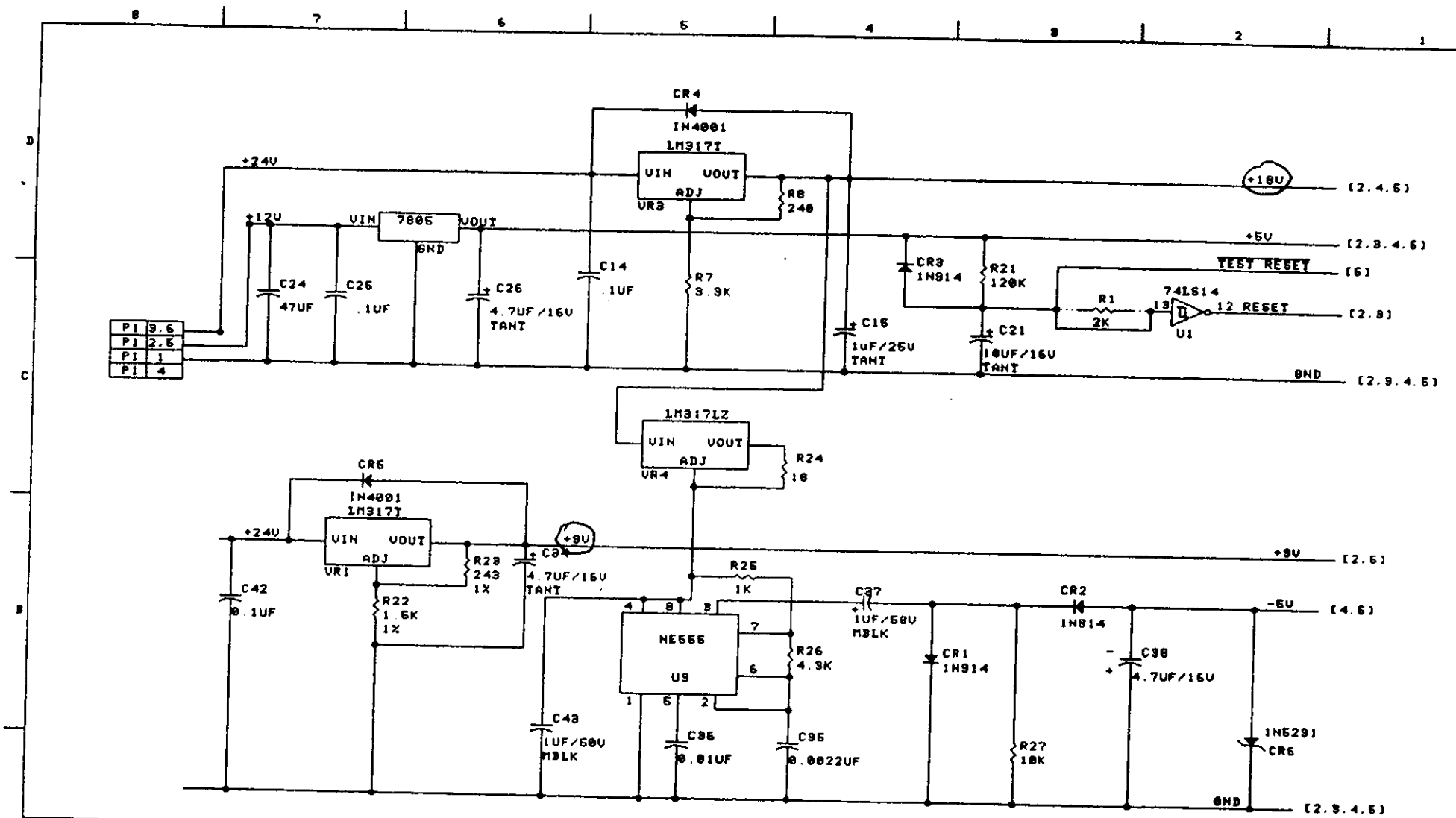

NOTES

1. IF R1 IS INSTALLED THEN THE TRACE ON CIRCUIT SIDE OF BOARD MUST BE CUT BETWEEN SOLDER PADS OF R1 (SEE NOTE ON ASSEMBLY DWG. FOR EXACT PLACE OF CUT)

MAR 28 1984

ANDROBOT, INC.

TITLE: TOPO II COMMUNICATION BI
POWER SUPPLY & RESET

SIZE	CODE	NUMBER
B		11-010281-001

DATE 12/20/83 SHEET 6

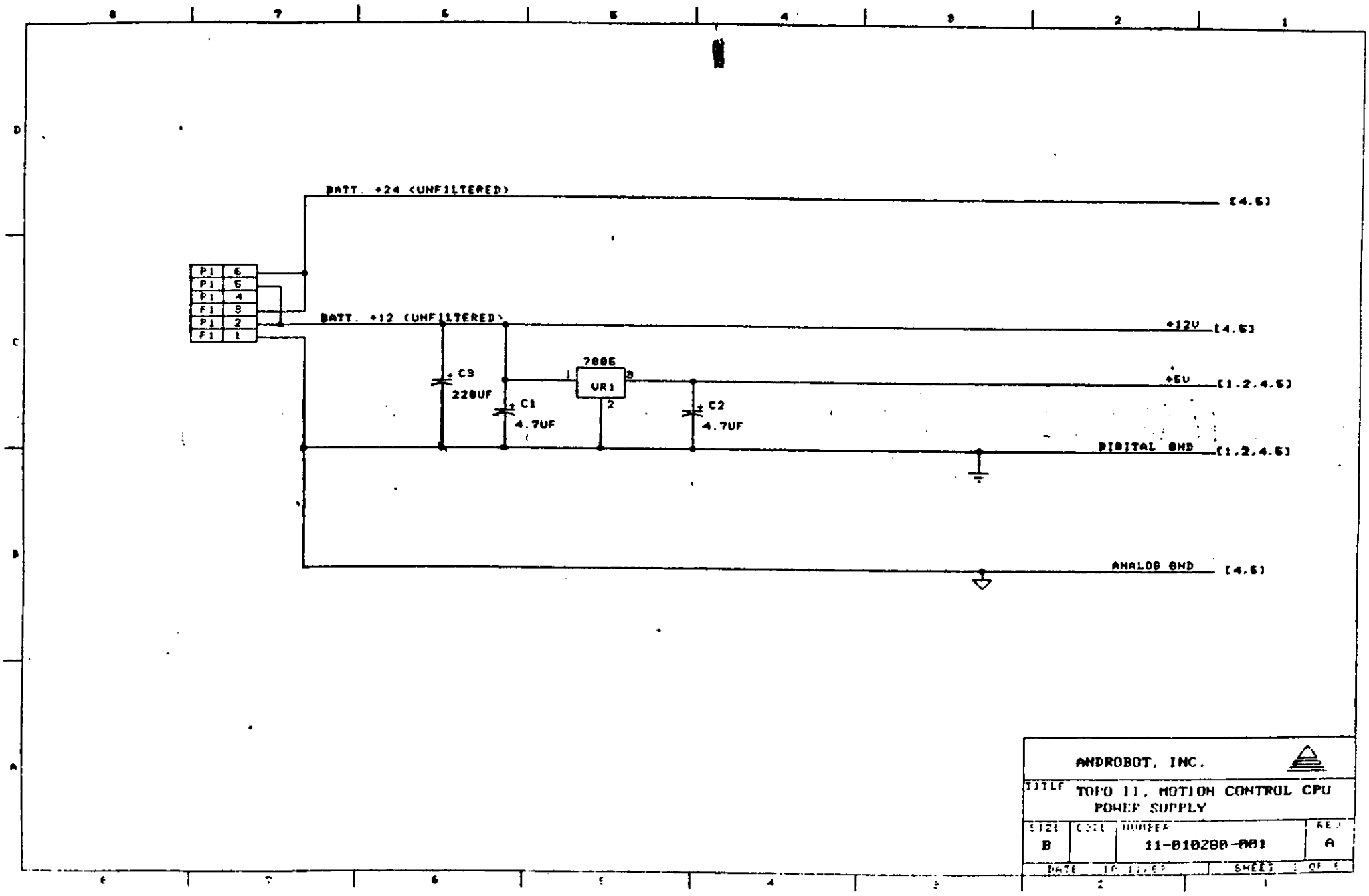

ANDROBOT, INC.

TITLE: TOPO II, MOTION CONTROL CPU POWER SUPPLY

SIZE	CODE	NUMBER	REV
B		11-810288-001	A

DATE | SHEET | OF

REVISIONS				
ZONE	LTR	DESCRIPTION	DATE	APVD

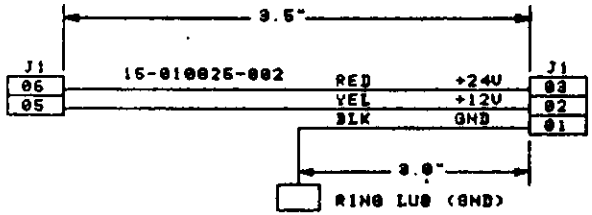

DATE	10/20/03
DWN	T. SAKAMOTO
APVD	
APVD	
ENGRG	
CHKR	

ANDROBOT, INC.

TITLE: TOPO II
POWER DISTRIBUTION HARNESS ASS'Y

SIZE	CODE	NUMBER	REV
B		15-010825-002	A

SHEET 2 OF 2

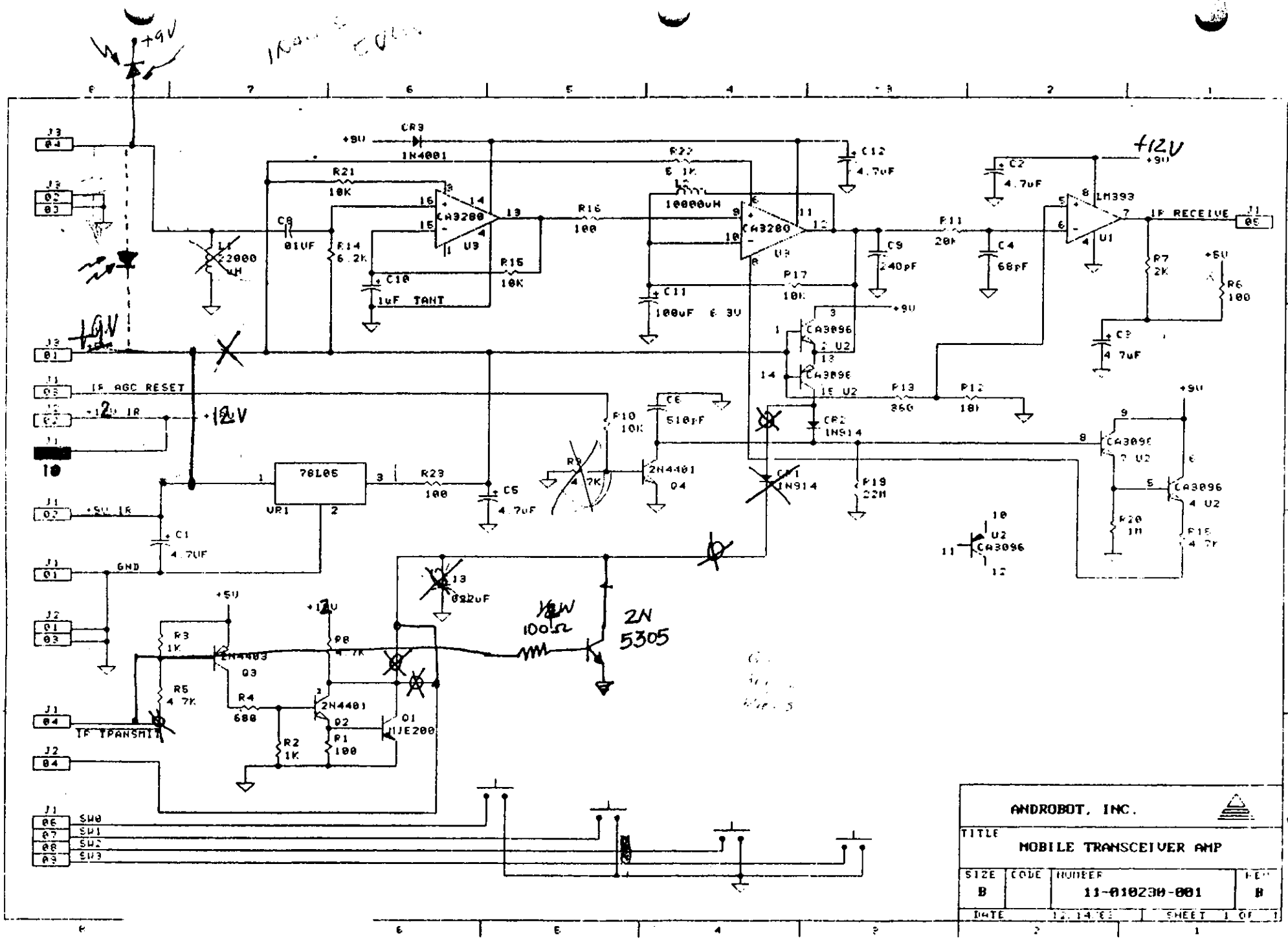

+9V
+12V
CR3
1N4001
R21
10K
C8
.01UF
R14
6.2K
L1
22000 uH
CA3280
U3
C10
1uF TANT
R15
10K
R16
100
R22
6.1K
L2
10000uH
C11
100uF 6.3V
R17
10K
C12
4.7uF
C9
240pF
R11
20K
C4
68pF
C2
4.7uF
LM393
U1
IF RECEIVE
R7
2K
R6
100
C3
4.7uF
CA3096
U2
R13
360
R12
18K
CR2
1N914
R19
22M
R10
10K
C6
510pF
2N4401
Q4
R9
4.7K
CR1
1N914
78L05
VR1
R23
100
C5
4.7uF
C1
4.7UF
IF AGC RESET
+12V IR
+5V IR
GND
IF TRANSMIT
R3
1K
R5
4.7K
2N4403
Q3
R4
680
R2
1K
R8
4.7K
2N4401
Q2
R1
100
Q1
MJE200
C13
.022uF
1/2W
100Ω
2N
5305
SW0
SW1
SW2
SW3
ANDROBOT, INC.
TITLE
MOBILE TRANSCEIVER AMP
SIZE
B
CODE
NUMBER
11-010230-001
REV
B
DATE
12.14.83
SHEET 1 OF 1

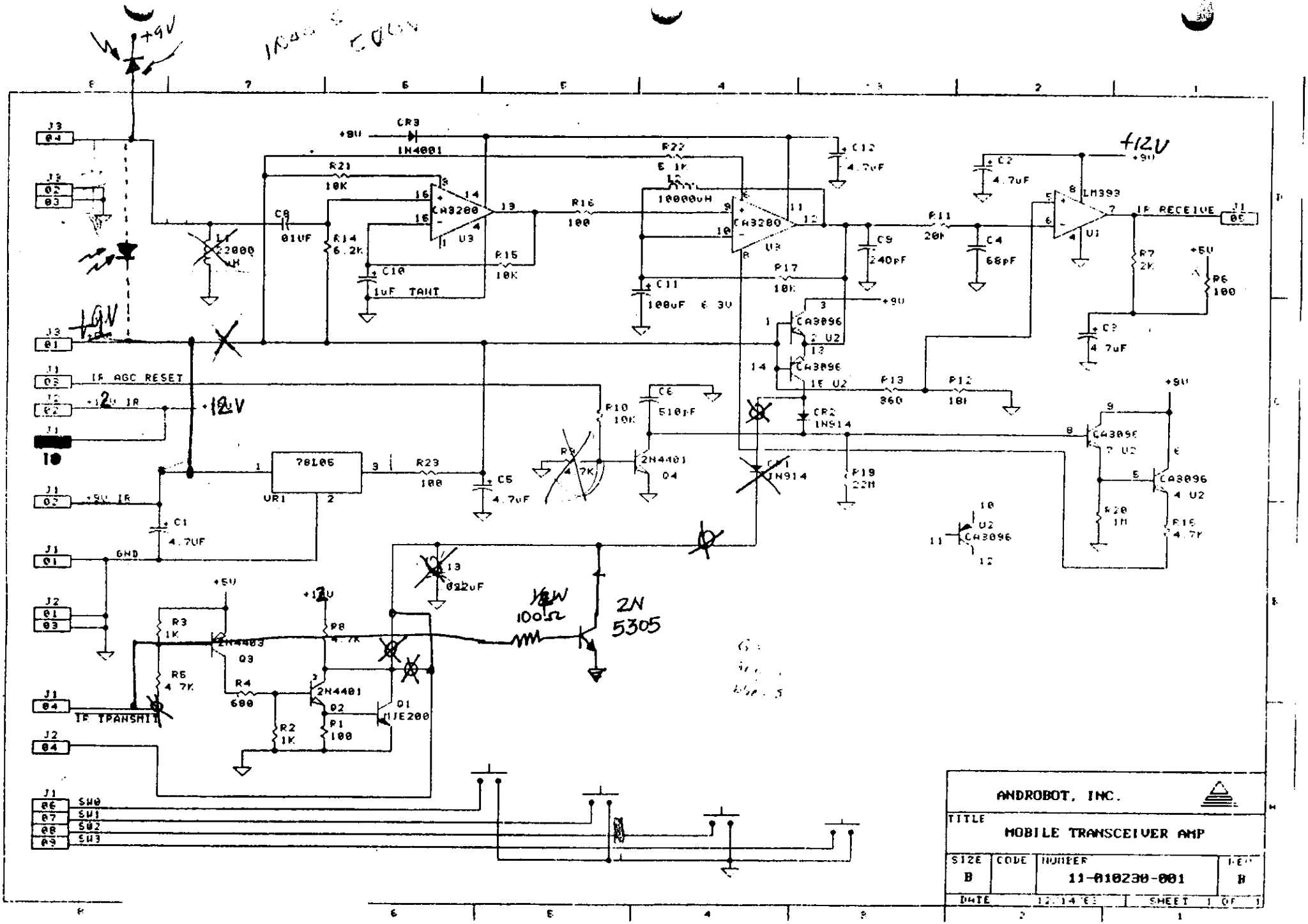

+9V
CR3
1N4001
R21
10K
R22
5.1K
L2
10000uH
CA3280
U3
R16
100
C8
.01UF
R14
6.2K
C10
1uF TANT
R15
10K
C11
100uF 6.3V
R17
10K
C12
4.7uF
C9
240pF
R11
20K
C4
68pF
C2
4.7uF
LM393
U1
IF RECEIVE
J1
05
R7
2K
R6
100
C3
4.7uF
+12V
CA3096
U2
R13
360
R12
18K
CR2
1N914
R19
22M
R10
10K
C6
510pF
2N4401
Q4
R9
4.7K
78L05
VR1
R23
100
C5
4.7uF
C1
4.7UF
IF AGC RESET
+12V IR
+9V IR
GND
R20
1M
R15
4.7K
R3
1K
R5
4.7K
2N4403
Q3
R4
680
R2
1K
R8
4.7K
2N4401
Q2
R1
100
Q1
MJE200
IF TRANSMIT
100Ω
2N
5305
SW0
SW1
SW2
SW3
ANDROBOT, INC.
TITLE
MOBILE TRANSCEIVER AMP
SIZE
B
CODE
NUMBER
11-010230-001
REV
B
DATE
SHEET 1 OF 1

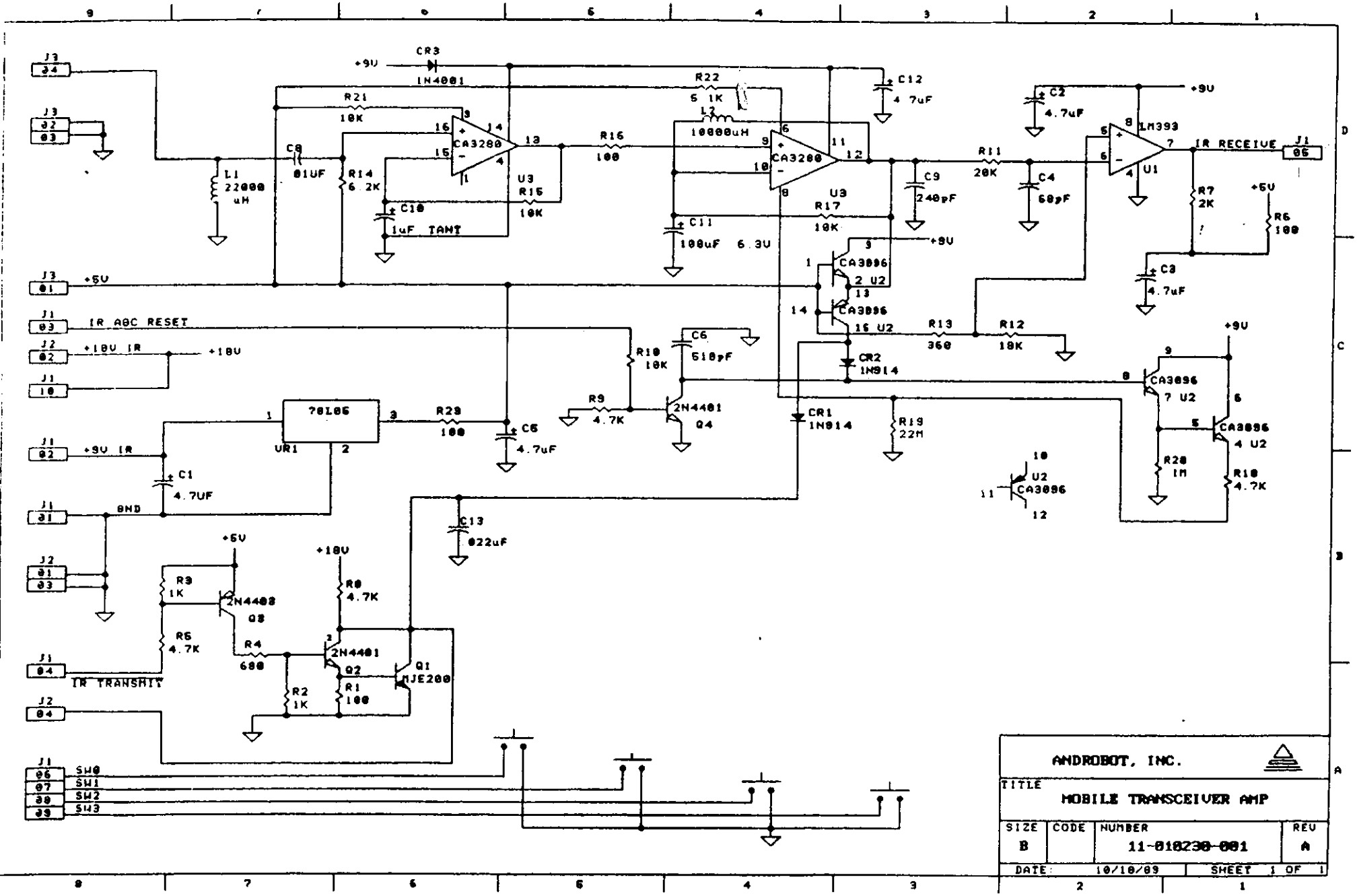

J3 04
J3 02 03
J3 01
J1 03
J2 02
J1 10
J1 02
J1 01
J2 01 03
J1 04
J2 04
J1 06 07 08 09
+9V
CR3
1N4001
R21
10K
C8
.01UF
R14
6.2K
L1
22000
uH
CA3280
U3
R15
10K
C10
1uF TANT
R16
100
R22
5.1K
L2
10000uH
CA3280
U3
R17
10K
C11
100uF 6.3V
C12
4.7uF
C9
240pF
R11
20K
C4
68pF
C2
4.7uF
LM393
U1
IR RECEIVE
J1 05
R7
2K
+5V
R6
100
C3
4.7uF
+5V
IR AGC RESET
+18V IR
+18V
R10
10K
C6
510pF
R9
4.7K
2N4401
Q4
CA3096
2 U2
CA3096
16 U2
R13
360
R12
18K
CR2
1N914
CR1
1N914
R19
22M
CA3096
7 U2
CA3096
4 U2
R20
1M
R18
4.7K
U2
CA3096
78L05
VR1
R23
100
C5
4.7uF
+9V IR
C1
4.7UF
GND
C13
.022uF
+5V
R3
1K
2N4403
Q3
R5
4.7K
R4
680
+18V
R8
4.7K
2N4401
Q2
R1
100
R2
1K
Q1
MJE200
IR TRANSMIT
SW0
SW1
SW2
SW3
ANDROBOT, INC.
TITLE
MOBILE TRANSCEIVER AMP
SIZE
B
CODE
NUMBER
11-010230-001
REV
A
DATE: 10/10/89
SHEET 1 OF 1

REVISIONS			
LTR	DESCRIPTION	DATE	APPVL
A	PRE-PROD REL. ECO 00020	10-26-83	LH
B	REVISE PER ECO 00030. SHT 2. ZONE B12	11-02-83	LH
C	RELOCATE 9 PIN CONN. ECO 00036	11-09-83	LH
D	REV SHT 2. ECO 00054	11-30-83	J. YOUNG
E	REVISED PER ECO 00092	1-30-84	JK

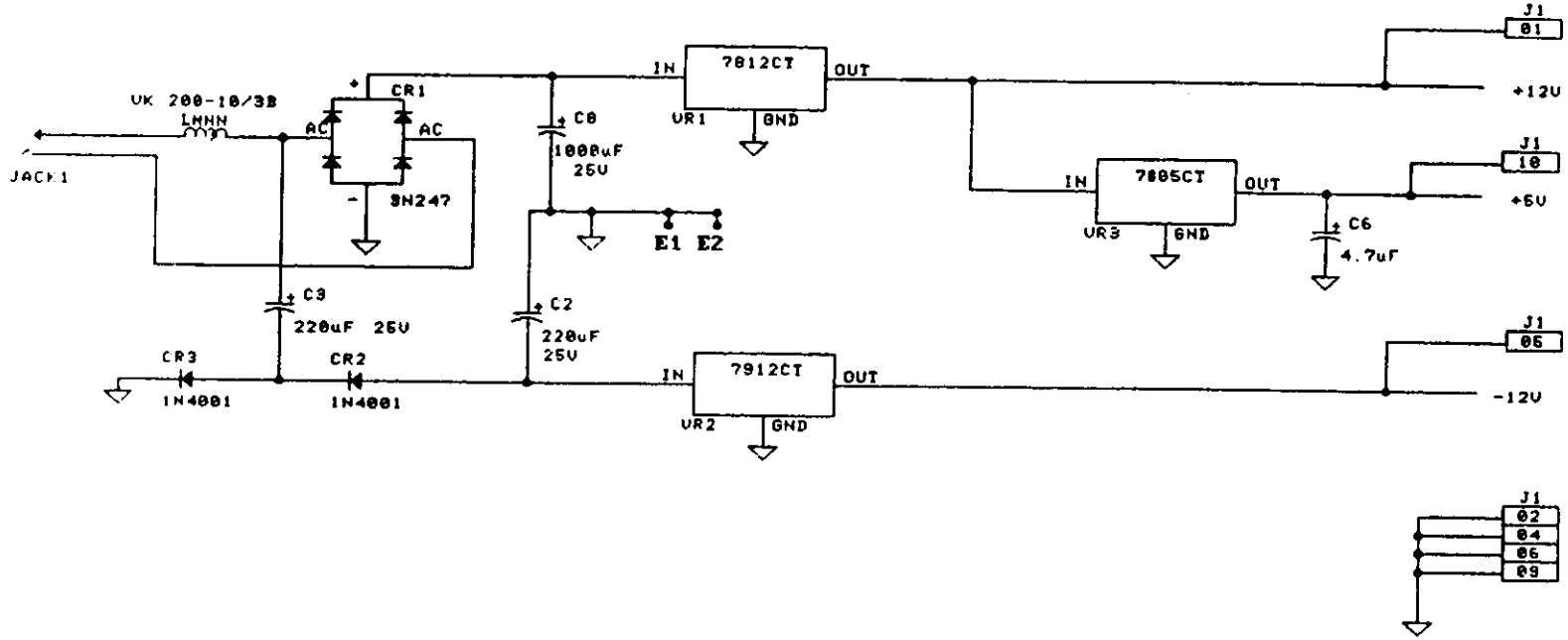

PRE-PRODUCTION RELEASE

MAR 28 1984

DATE: 11-09-83	ANDROBOT, INC.		
DWN: J.K	TITLE: MOST DATA LINK DIGITAL		
CHK: J.YOUNG	SIZE: B	CODE:	NUMBER: 11-010233-001
APPVL:	REV: E		
DOC: L.HANDOR	DATE: 11/29/83	SHEET 1 OF 2	
CONT:			

PRE-PRODUCTION RELEASE

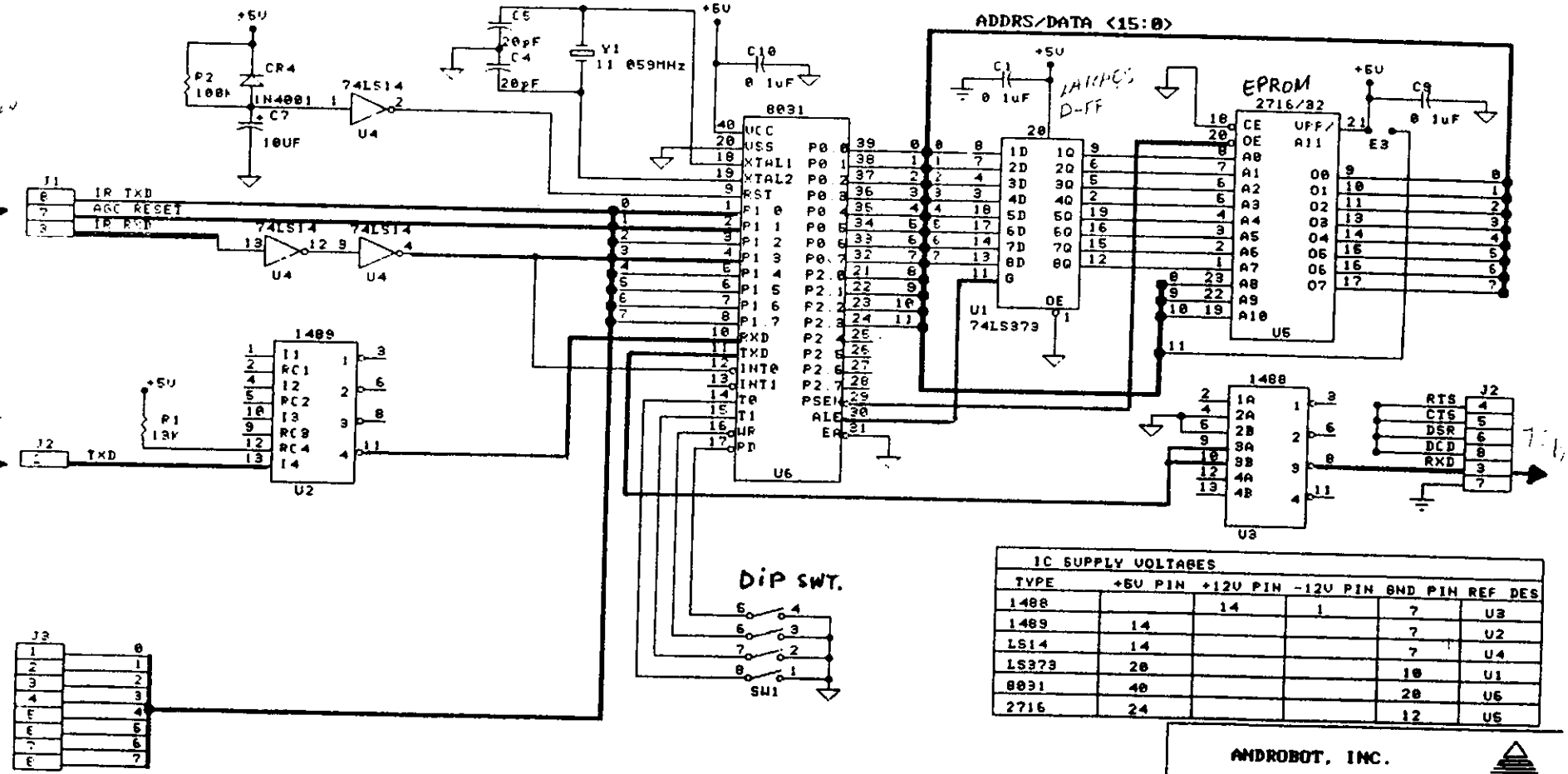

IC SUPPLY VOLTAGES					
TYPE	+5V PIN	+12V PIN	-12V PIN	GND PIN	REF DES
1488		14	1	7	U3
1489	14			7	U2
LS14	14			7	U4
LS373	20			10	U1
8031	40			20	U6
2716	24			12	U6

MAR 28 1984

ANDROBOT, INC.

TITLE: HOST DATA LINK DIGITAL

SIZE	CODE	NUMBER	REV
B		11-010233-001	E

DATE 11/29/83 SHEET 2 OF 2

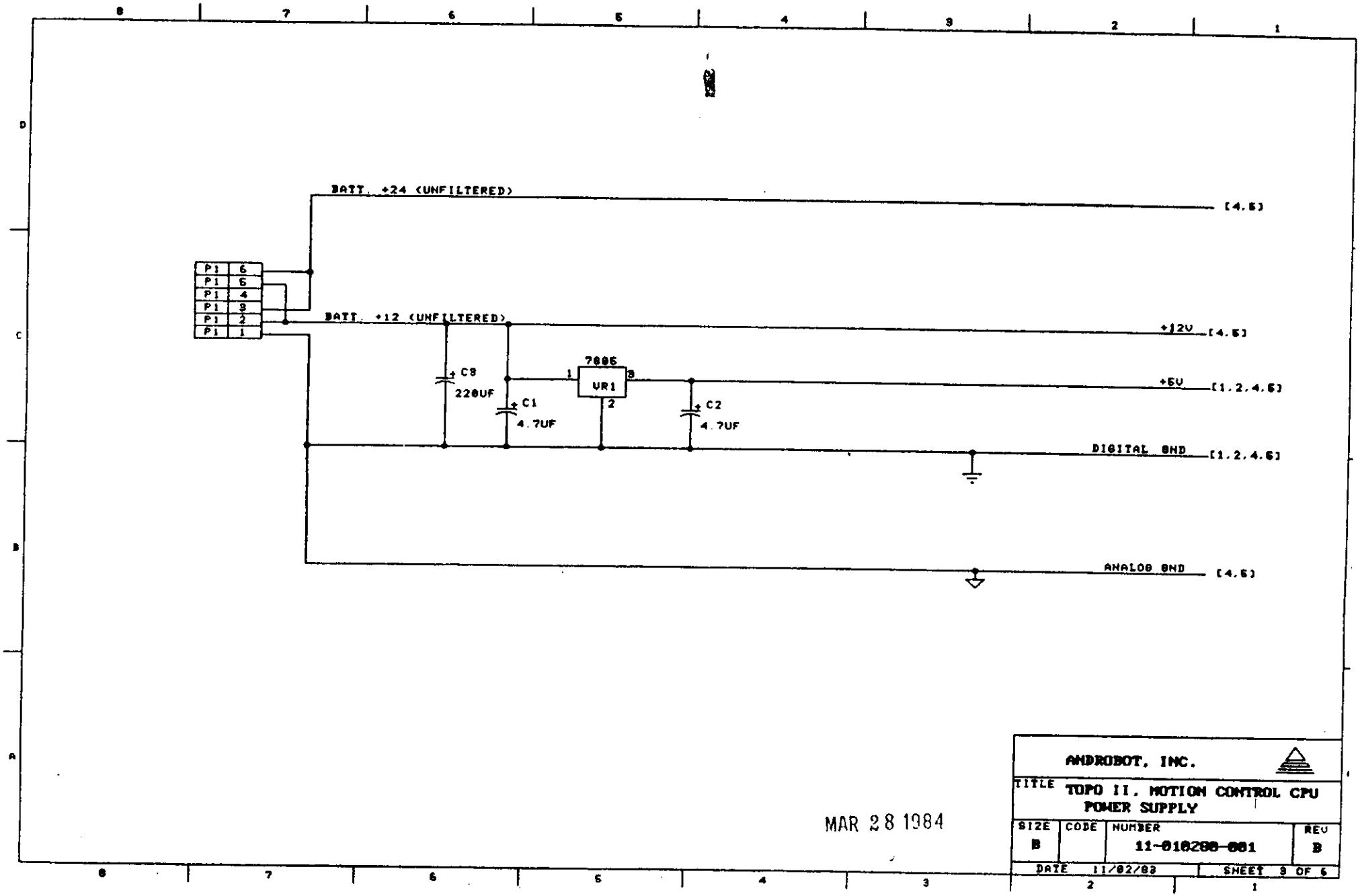

MAR 28 1984

ANDROBOT, INC.			
TITLE: TOPO II, MOTION CONTROL CPU POWER SUPPLY			
SIZE: B	CODE:	NUMBER: 11-010288-001	REV: B
DATE: 11/02/83		SHEET 3 OF 6	

PRE-PRODUCTION RELEASE

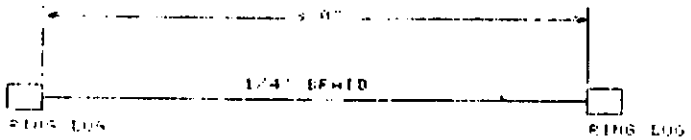

ANDROBOT, INC.			
TITLE: TOPO II CAGE/CHASSIS GROUND STRAP			
SIZE: B	CODE:	NUMBER: 15-810829-001	REV: A
		SHEET 1 OF 1	

REVISIONS				
ZONE	LTR	DESCRIPTION	DATE	APVD

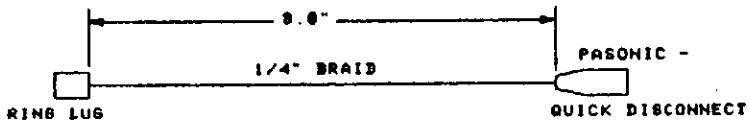

DATE	10/10/03
DWN	T. SAKAMOTO
APVD	
APVD	
ENGR&	
CHKR	

ANDROBOT, INC.

TITLE: TOPO II
BATTERY GROUND STRAP

SIZE	CODE	NUMBER	REV
B		15-01030-001	A

SHEET 1 OF 1

REVISIONS			
LTR	DESCRIPTION	DATE	APVD
A	PRE-PROD ECO 00019	10/21/83	L.H.
B	REVISED ECO 00032	11/08/83	L.H.
C	REVISED ECO 00068	12/09/83	L.H.
D	REVISED ECO 00072	12/16/83	L.H.
E	REVISED ECO 00078	12/20/83	

IC TABLE

IC TYPE	REF. DES.	+5V	+10	+5V	GND	+24	+12
4011	U2			14	07		
4071	U8			14	07		
74LS132	U11			14	07		
74LS14	U1			14	07		
74LS378	U6			20	10		
2764	U10			28	14		
8031-A	U7			40	20		
8156	U5			40	20		
TL072	U8		08		04		
LM384	U4		14		7.8, 10.4		
555	U9				01		
LM317T	VR1	VOUT				VIN	
LM317T	VR3		VOUT			VIN	
LM7805	VR2			03	02		01
LM317LZ	VR4		VIN				

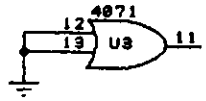

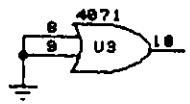

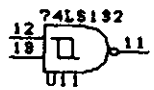

NOTES

1. 0.1uF BYPASS CAPS ARE C11-C19.C22.C29.C41.C44.
2. OPTIONAL PARTS FOR U1 ARE: 74HC14 OR MC14584 HOWEVER IF A 14584 IS USED THE AUTO-TESTER CANNOT BE USED TO TEST ALL FUNCTIONS OF THE BOARD.
3. IF EITHER OPTIONAL PART IS USED IN U1 THEN R1 MUST BE INSTALLED. (SEE SHT.#6)

PRE-PRODUCTION RELEASE

MAR 28 1984

DATE	12/20/83
DWN	J. YOUNG
APVD	
APVD	
ENGRG	
CHKR	

ANDROBOT, INC.

TITLE: TOPO II COMMUNICATION BD
MAIN CPU UNUSED GATES, IC LIST

SIZE	CODE	NUMBER	REV
B		11-818281-001	E

SHEET 1 OF

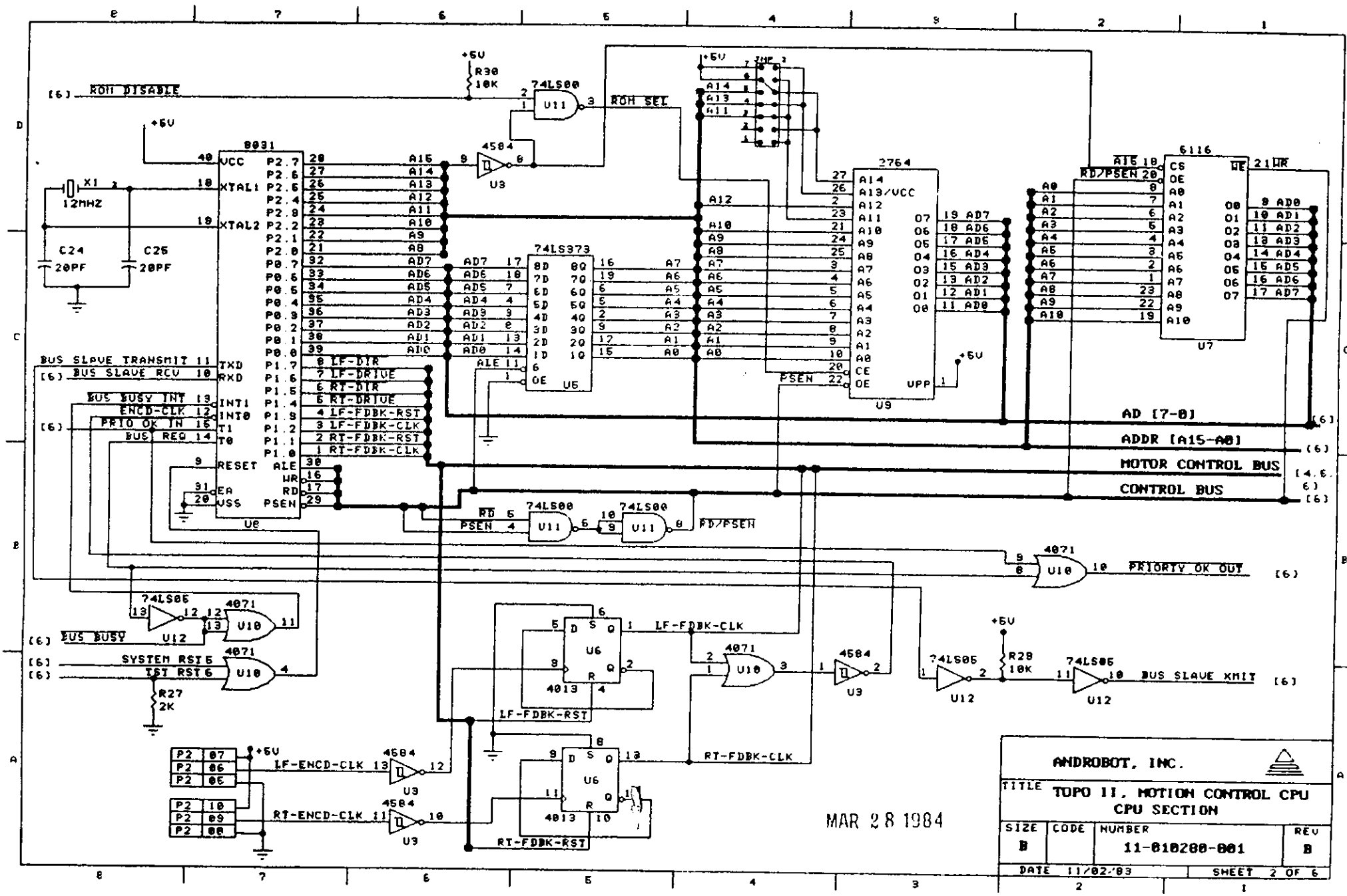

PRE-PRODUCTION RELEASE

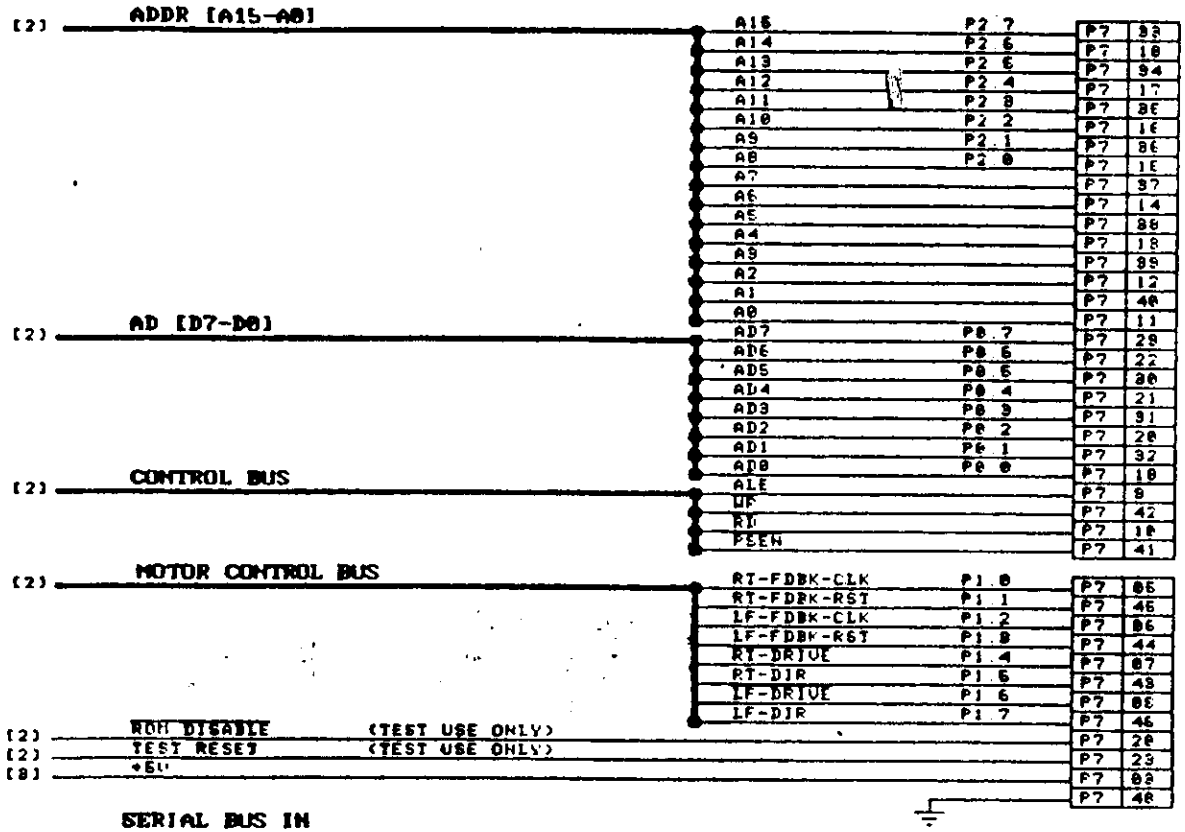

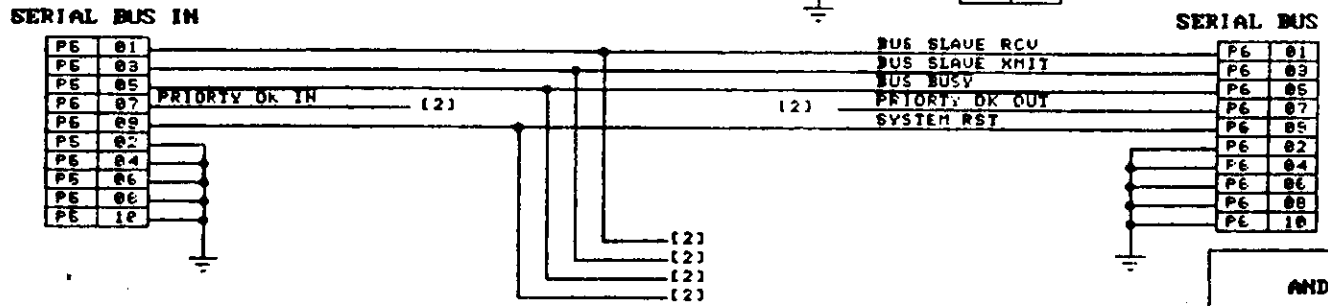

ANDROBOT, INC.

TITLE TOPO II, MOTION CONTROL CPU CONNECTOR PINOUT

SIZE	CODE	NUMBER	REV
B		11-010200-001	A

DATE 10/11/86 SHEET 8 OF 8

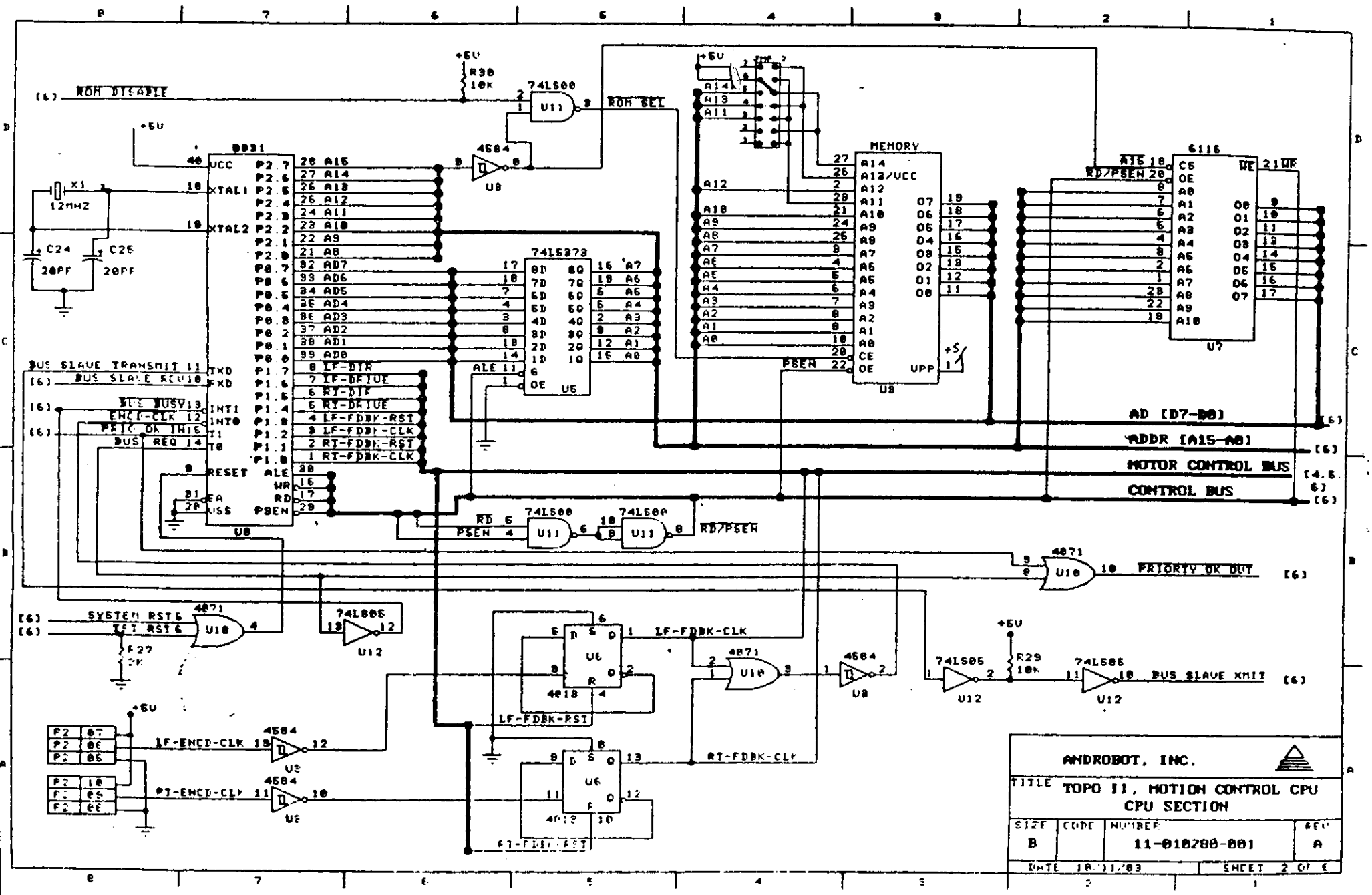
ROM DISABLE
ROM SEL
MEMORY
6116
74LS373
8031
AD [D7-D0]
ADDR [A15-A0]
MOTOR CONTROL BUS
CONTROL BUS
PRIORTY OK OUT
BUS SLAVE XMIT
LF-FDBK-CLK
LF-FDBK-RST
RT-FDBK-CLK
LF-ENCD-CLK
RT-ENCD-CLK
SYSTEM RST
TST RST
BUS SLAVE TRANSMIT
BUS SLAVE RCV
BUS BUSY
ENCD-CLK
PRIO OK IN
BUS REQ
RD/PSEN
ANDROBOT, INC.
TITLE TOPO II, MOTION CONTROL CPU
CPU SECTION
SIZE B
CODE
NUMBER 11-010280-001
REV A
DATE 10/11/83
SHEET 2 OF 6

REVISIONS			
LTR	DESCRIPTION	DATE	APVD
A	PRE-PROD REL ECO 00015	10/21/83	L H
B	REVISIE ECO 00080	01/17/84	
C	ECO 00081	1/30/84	JR

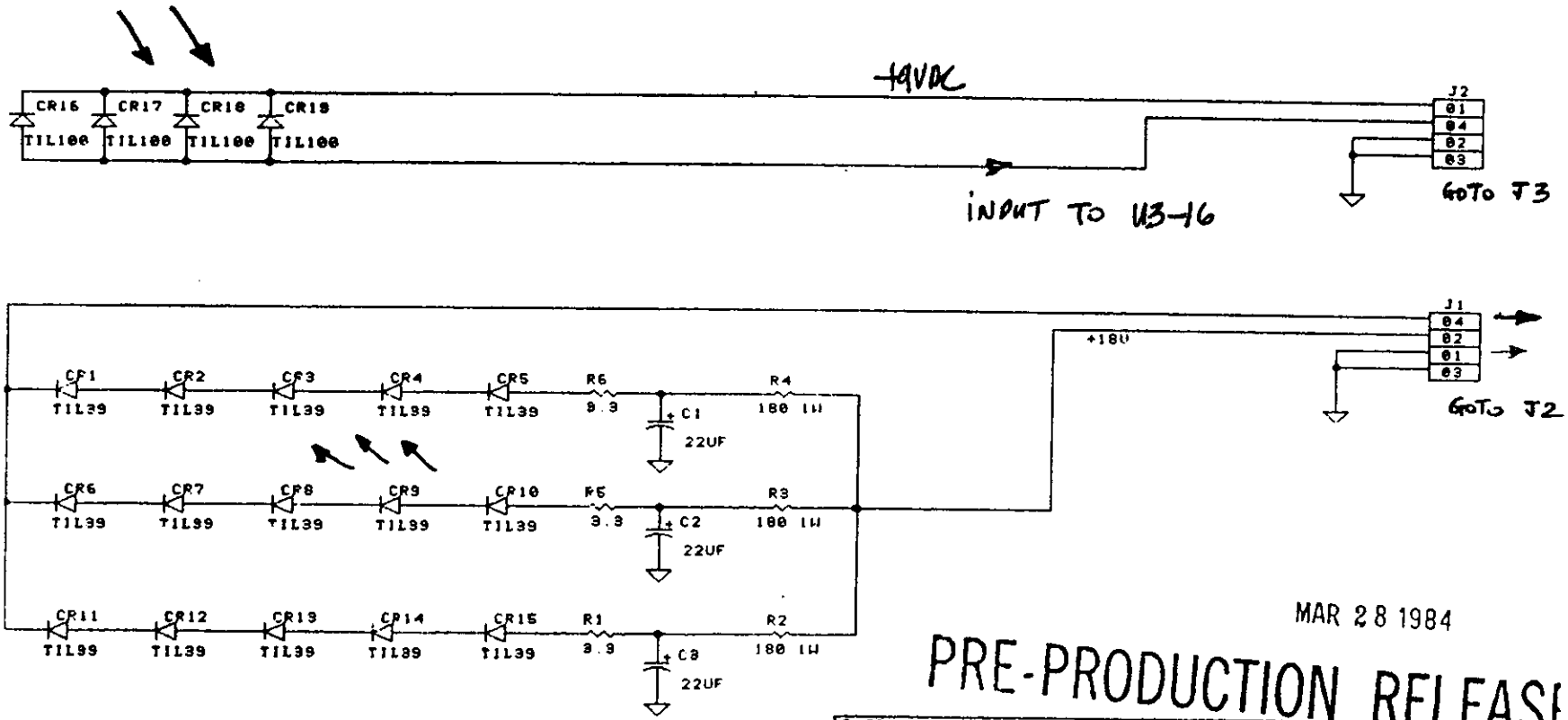

MAR 28 1984

PRE-PRODUCTION RELEASE

DATE	01/30/84
DWN	J YOUNG
APVD	
APVD	
ENGFG	
CHKR	

ANDROBOT, INC.

TITLE: MOBILE TRANCEIVER SENSOR

SIZE	CODE	NUMBER	REV
B		11-010369-001	C

SHEET 1 OF 1

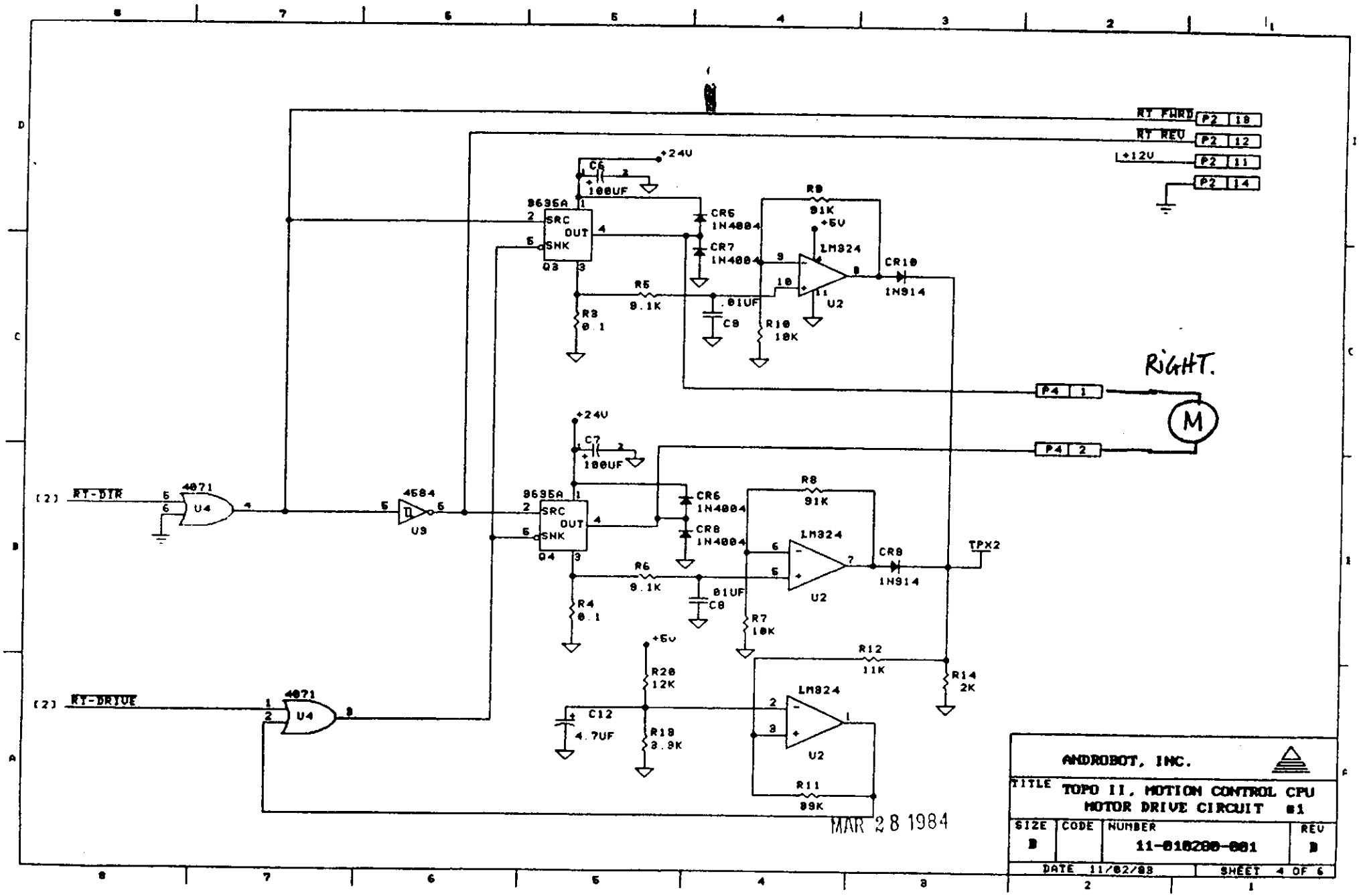

PRE-PRODUCTION RELEASE

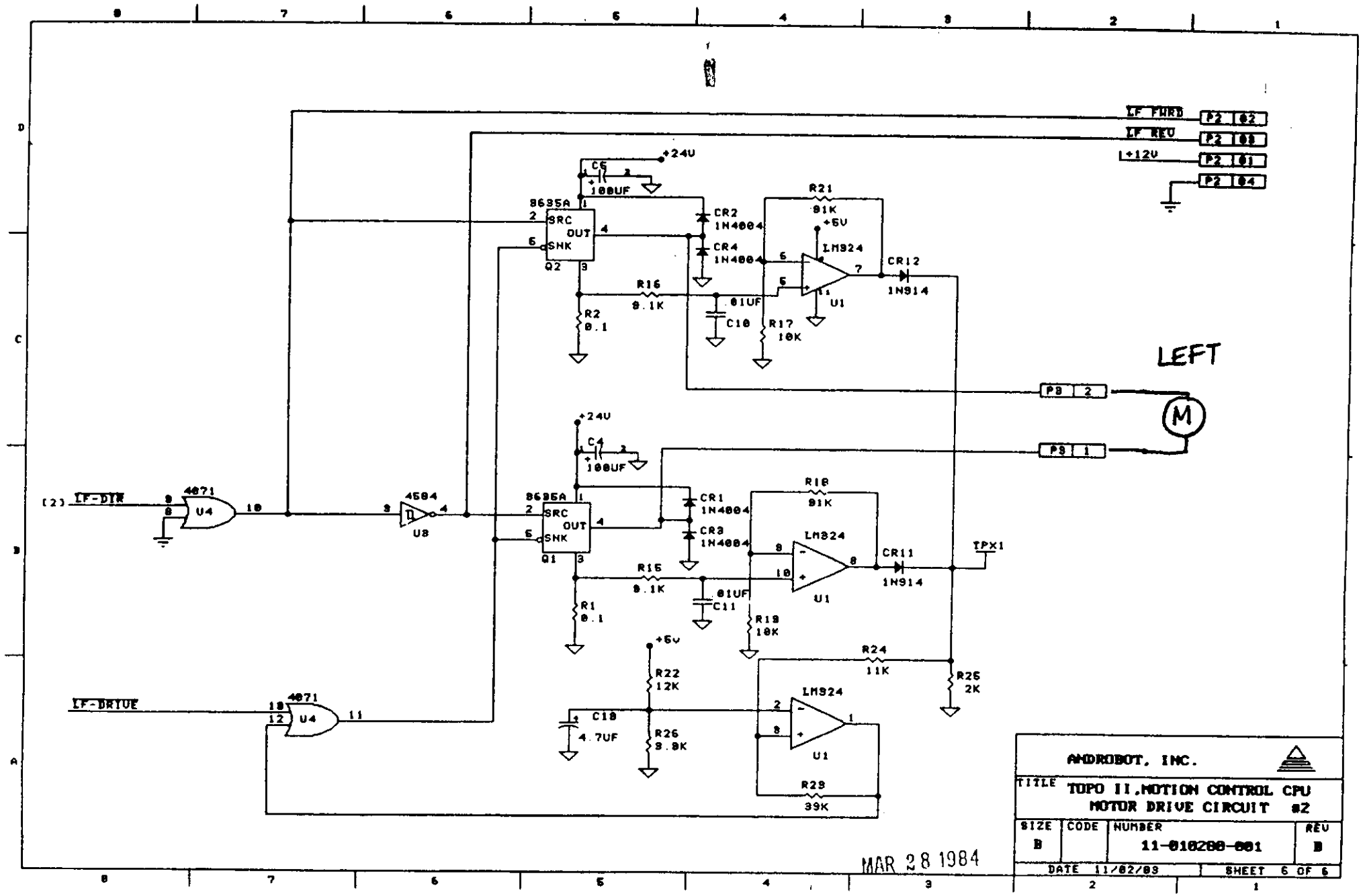
LF FWRD
LF REV
+12V
P2 82
P2 83
P2 81
P2 84
+24V
C6
100UF
8635A
SRC
OUT
SNK
Q2
CR2 1N4004
CR4 1N4004
R21
91K
+5V
LM324
U1
CR12
1N914
R16
9.1K
.01UF
C10
R17
10K
R2
0.1
LEFT
P3 2
P3 1
M
+24V
C4
100UF
[2] LF-DIR
4071
U4
4584
U8
8635A
SRC
OUT
SNK
Q1
CR1 1N4004
CR3 1N4004
R18
91K
LM324
U1
CR11
1N914
TPX1
R15
9.1K
.01UF
C11
R19
10K
R1
0.1
+5V
R22
12K
R24
11K
R25
2K
LF-DRIVE
4071
U4
C18
4.7UF
R26
9.9K
LM324
U1
R29
39K
ANDROBOT, INC.
TITLE TOPO II, MOTION CONTROL CPU
MOTOR DRIVE CIRCUIT #2
SIZE B
CODE
NUMBER 11-010288-001
REV B
DATE 11/02/83
SHEET 6 OF 6
MAR 28 1984
PRE-PRODUCTION RELEASE

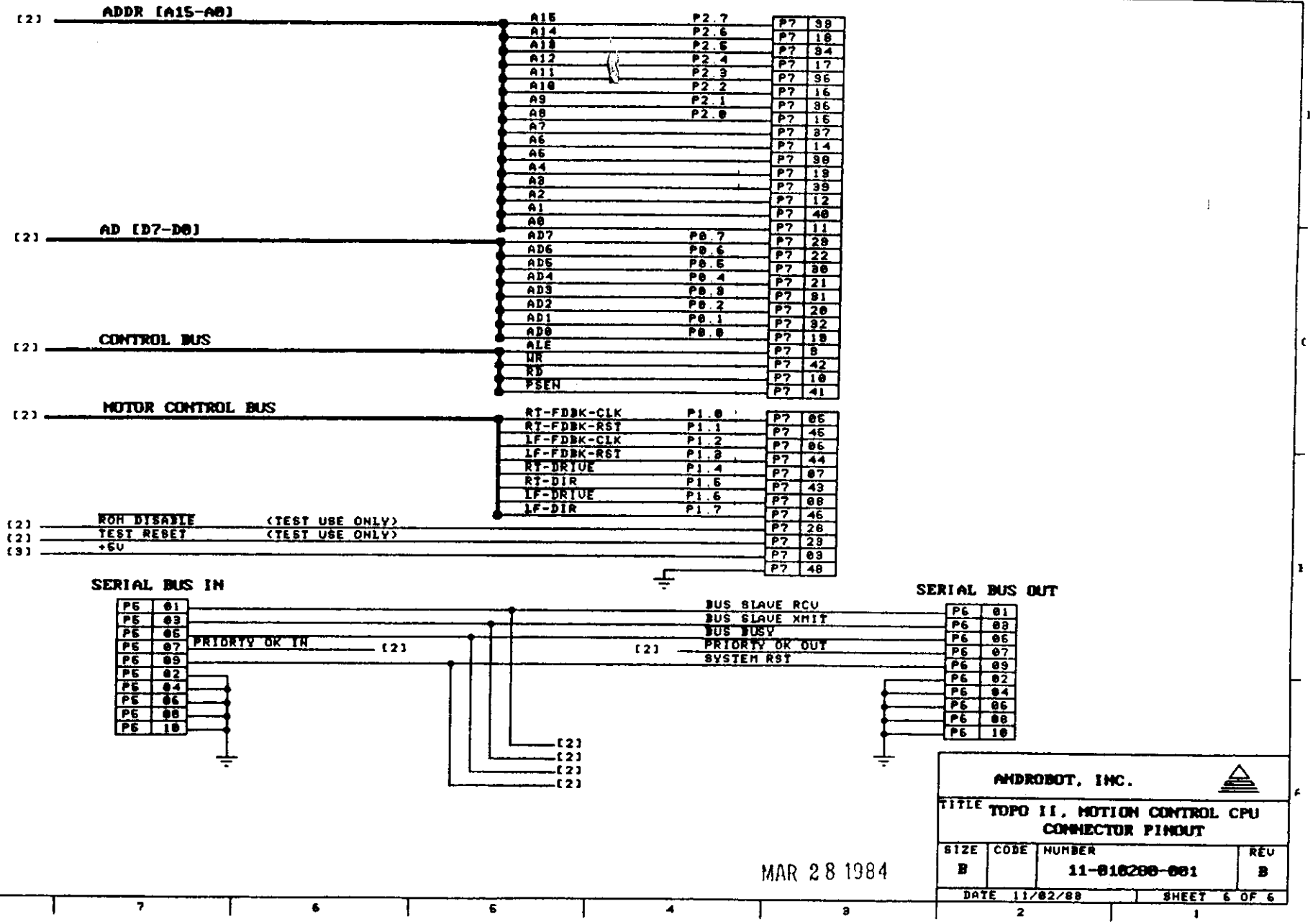

ANDROBOT, INC.

TITLE: TOPO II, MOTION CONTROL CPU CONNECTOR PINOUT

SIZE	CODE	NUMBER	REV
B		11-016200-001	B

DATE 11/02/88 SHEET 6 OF 6

MAR 28 1984

PRE-PRODUCTION RELE

REVISIONS			
LTR	DESCRIPTION	DATE	APPD
A	PRE-PROD REL, ECO 00019	10/21	

IC TABLE

IC TYPE	REF DESIGNATOR	QTY	+5V	GND	-5V	+12	+24
8871	U8	1	40	20			
2764	U9	1	28	14			
6116	U7	1	24	12			
4013	U6	1	14	07			
4071	U4 U10	2	14	07			
4584	U3	1	14	07			
74LS00	U11	1	14	07			
74LS05	U12	1	14	07			
74LS373	U5	1	20	10			
LM324	U1.U2	2	04	11			
LM7805	VR1	1	03	02		01	
SG3635	Q1.Q2.Q3.Q4	4					01

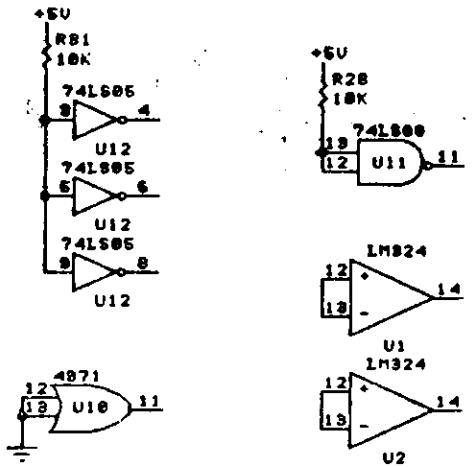

NOTE

1. ALL BYPASS CAPACITORS ARE .1UF IN VALUE.
2. DESIGNATORS FOR CAPS ARE C14 THRU C23.

DATE 10/21/83

ANDROBOT, INC.

TITLE TOPO II, MOTION CONTROL CPU
COVER SHEET

SIZE	CODE	NUMBER	REV
B		11-010200-001	A

DATE 10/21/83 SHEET 1 OF 6

REVISIONS				
ZONE	LTR	DESCRIPTION	DATE	APVD

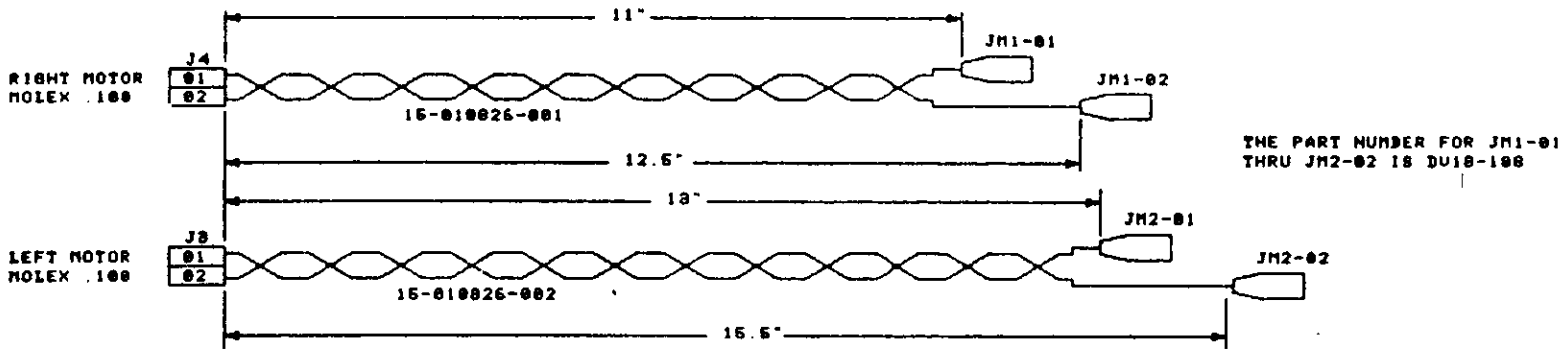

WIRING NOTE

ITEM	DESIGNATOR	WIRE COLOR	LENGTH (IN.)	TERMINATION PT	GUAGE
1	J4-01	RED	11.0	JM1-01	18
2	J4-02	BLACK	12.5	JM1-02	18
3	J3-01	RED	13.0	JM2-01	18
4	J3-02	BLACK	15.5	JM2-02	18

DATE	10/18/09
DWN	T SAKAMOTO
APVD	
APVD	
ENGRG	
CHKR	

ANDROBOT, INC.

TITLE: TOPO II
MOTOR HARNESS ASSEMBLY

SIZE	CODE	NUMBER	REV
B		15-010026-001,002	A

SHEET 1 OF

REVISIONS				
ZONE	LTR	DESCRIPTION	DATE	APVD
	A	PRE-PRODUCTION RELEASE	11/21/83	

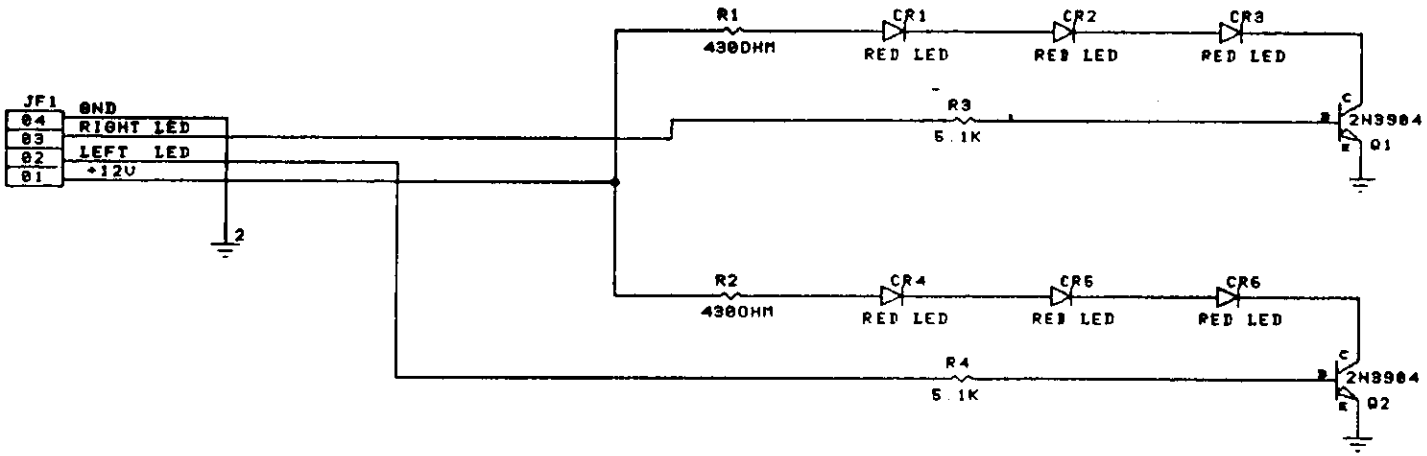

PRE-PRODUCTION RELEASE

MAR 28 1984

DATE	10/20/83
DWN	T. SAKAMOTO
APVD	
APVD	
ENGRG	
CHKR	

ANDROBOT, INC.

TITLE: TOPO II
FOOTLIGHT SCHEMATIC

SIZE	CODE	NUMBER	REV
B		11-010249-001	A

SHEET 1 OF 1

REVISIONS			
LTR	DESCRIPTION	DATE	APPVD
A	PRE-PROD REL ECO 00019		
A1	ECO 00043		

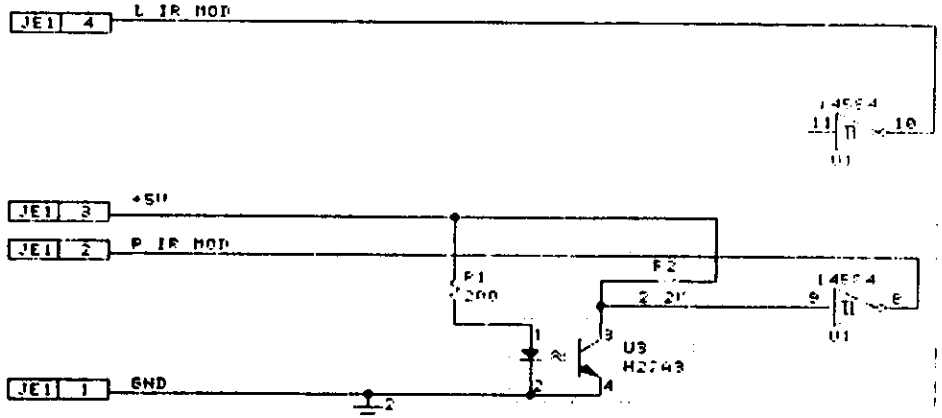

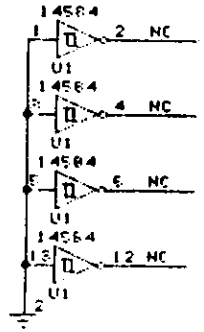

PRE-PRODUCTION RELEASE

MAR 28 1984

DATE	10/20/83
DSN	J. YOUNG
APVD	
MFGR	
ENGR	
CHKR	

ANDROBOT, INC.

TITLE: TOPO II
MOTOR ENCODER BRD.

SIZE	CODE	NUMBER	REV
B		11-810757-001	A1

SHEET 1 OF

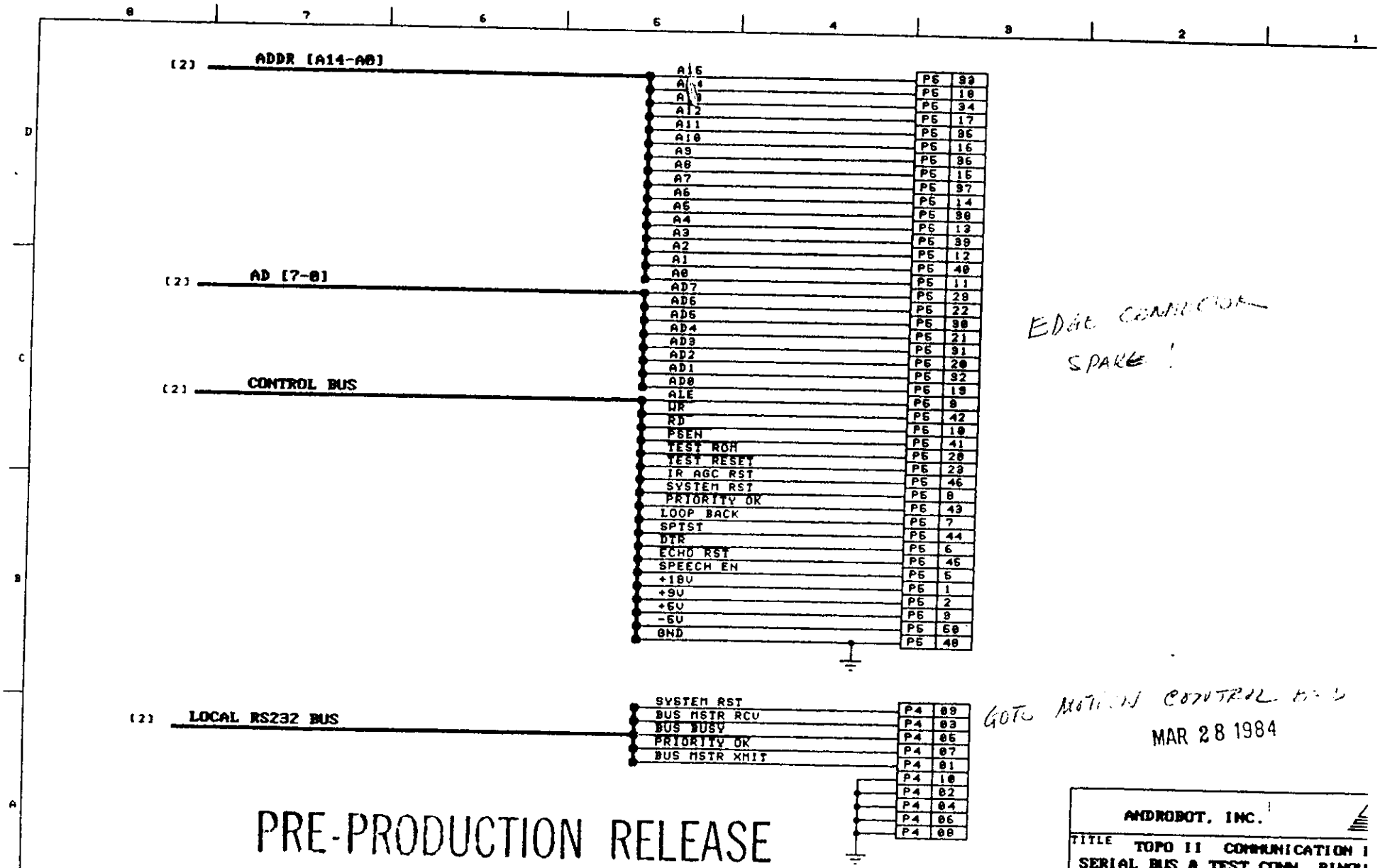
(2) ADDR [A14-A0]
A15
A14
A13
A12
A11
A10
A9
A8
A7
A6
A5
A4
A3
A2
A1
A0
P5 33
P5 10
P5 34
P5 17
P5 35
P5 16
P5 36
P5 15
P5 37
P5 14
P5 38
P5 13
P5 39
P5 12
P5 40
P5 11
(2) AD [7-0]
AD7
AD6
AD5
AD4
AD3
AD2
AD1
AD0
P5 28
P5 22
P5 90
P5 21
P5 91
P5 20
P5 92
P5 19
P5 9
(2) CONTROL BUS
ALE
WR
RD
PSEN
TEST ROM
TEST RESET
IR AGC RST
SYSTEM RST
PRIORITY OR
LOOP BACK
SPTST
DTR
ECHO RST
SPEECH EN
+18V
+9V
+5V
-5V
GND
P5 42
P5 10
P5 41
P5 28
P5 23
P5 46
P5 8
P5 43
P5 7
P5 44
P5 6
P5 45
P5 5
P5 1
P5 2
P5 3
P5 50
P5 49
EDAC CONNECTOR
SPARE !
(2) LOCAL RS232 BUS
SYSTEM RST
BUS MSTR RCV
BUS BUSY
PRIORITY OR
BUS MSTR XMIT
P4 09
P4 03
P4 05
P4 07
P4 01
P4 10
P4 02
P4 04
P4 06
P4 08
GOTO MOTION CONTROL B'D
MAR 28 1984
PRE-PRODUCTION RELEASE
ANDROBOT, INC.
TITLE TOPO II COMMUNICATION I
SERIAL BUS & TEST CONN. PINOU
SIZE B
CODE
NUMBER 11-018281-001
DATE 12/20/83
SHEET 6

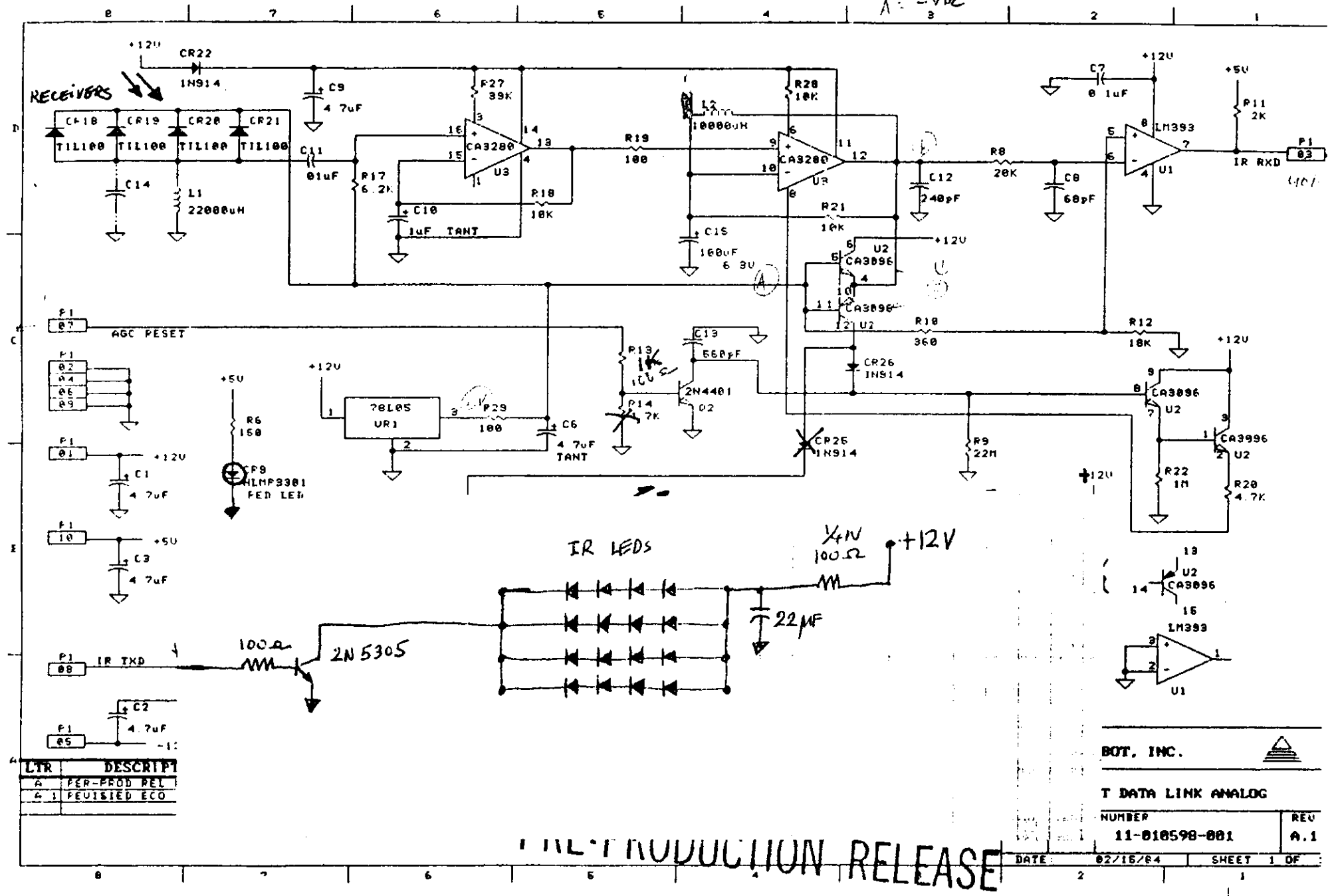

LTR	DESCRIPTI
A	PER-PROD REL
A.1	REVISED ECO

BOT, INC.

T DATA LINK ANALOG

NUMBER	REV
11-010598-001	A.1

DATE 02/16/84 SHEET 1 OF

PRE-PRODUCTION RELEASE

(X) CUT OPEN

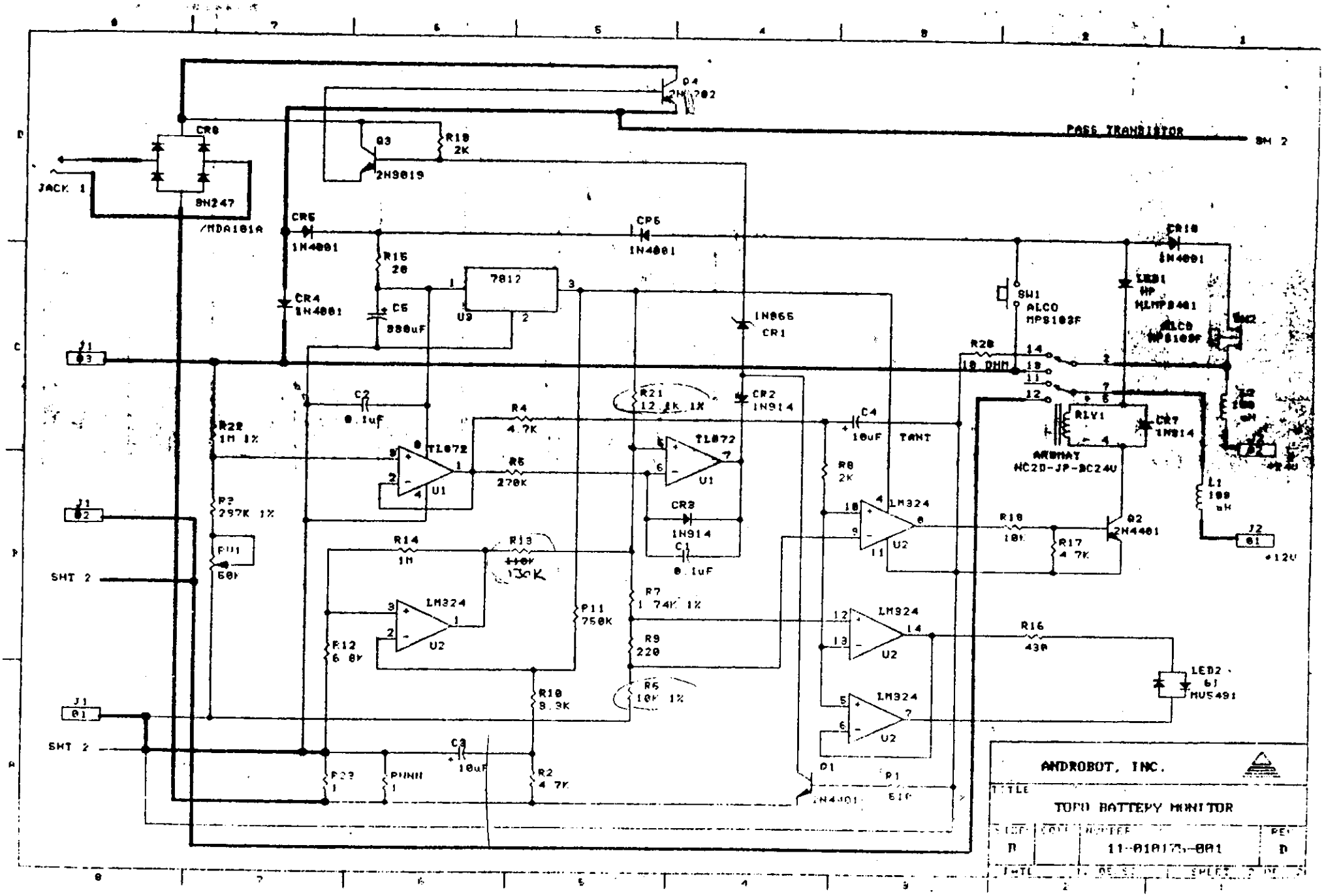

PASS TRANSISTOR
SH 2
JACK 1
CR8
SN247
/MDA101A
Q3
2N3019
R19
2K
Q4
2N4202
CR5
1N4001
CR6
1N4001
CR10
1N4001
R15
20
C5
880uF
7812
U3
CR4
1N4001
1N865
CR1
SW1
ALCO
MPS103F
LED1
HP
HLMP3401
ALCO
MPS103F
R20
10 OHM
J1
03
C2
0.1uF
R21
12.1K 1%
CR2
1N914
R4
4.7K
C4
10uF
TANT
RLY1
CR7
1N914
ARDMAT
NC2D-JP-DC24V
R22
1M 1%
TL072
U1
R5
270K
TL072
U1
R8
2K
L1
100
uH
J1
02
R3
297K 1%
CR3
1N914
C1
0.1uF
LM324
U2
R18
10K
R17
4.7K
Q2
2N4401
J2
01
+12V
PU1
50K
R14
1M
R13
130K
SHT 2
LM324
U2
R7
1.74K 1%
R9
220
R12
6.8K
R11
750K
LM324
U2
R16
430
LED2
61
MV5491
R10
3.3K
R6
10K 1%
LM324
U2
J1
01
SHT 2
C3
10uF
R23
1
PNNN
1
R2
4.7K
Q1
2N4401
R1
510
ANDROBOT, INC.
TITLE
TOPO BATTERY MONITOR
SIZE
B
NUMBER
11-010175-001
REV
D

error code	cause
1100	Can't write and read one byte of value 0 at ram address 0.
1101	Can't write and read a value 1 in bit 0 addrs 0
1102	Can't write and read a value 1 in bit 1 addrs 0
1103	Can't write and read a value 1 in bit 2 addrs 0
1104	Can't write and read a value 1 in bit 3 addrs 0
1105	Can't write and read a value 1 in bit 4 addrs 0
1106	Can't write and read a value 1 in bit 5 addrs 0
1107	Can't write and read a value 1 in bit 6 addrs 0
1108	Can't write and read a value 1 in bit 7 addrs 0
1110	Can't write and read a pattern into/out of ram at addresses 0-FFH.
1111	Can't read the previous pattern back from ram addresses 0-FFH.
2001	All odd bytes are of value 0.
2002	All even bytes are of value 0.
3101	The pull-ups on ports B & C look like grounds.
3102	The ports A and C report something other than value 0 when port B is output with value 0.
3103	The ports A and C report something other than the test pattern output on port B.
3104	The ports A and B report something other than value 0 when port C is output with value 0.
3105	The ports A and B report something other than the test pattern output on port C.

COMMUNICATION BOARD TEST
NUMBER DEFINITIONS

23 MAY 1984

error code	cause
1100	Can't write and read one byte of value 0 at ram address 0.
1101	Can't write and read a value 1 in bit 0 addrs 0
1102	Can't write and read a value 1 in bit 1 addrs 0
1103	Can't write and read a value 1 in bit 2 addrs 0
1104	Can't write and read a value 1 in bit 3 addrs 0
1105	Can't write and read a value 1 in bit 4 addrs 0
1106	Can't write and read a value 1 in bit 5 addrs 0
1107	Can't write and read a value 1 in bit 6 addrs 0
1108	Can't write and read a value 1 in bit 7 addrs 0
1110	Can't write and read a pattern into/out of ram at addresses 0-FFH.
1111	Can't read the previous pattern back from ram addresses 0-FFH.
2001	All odd bytes are of value 0.
2002	All even bytes are of value 0.
3101	The pull-ups on ports B & C look like grounds.
3102	The ports A and C report something other than value 0 when port B is output with value 0.
3103	The ports A and C report something other than the test pattern output on port B.
3104	The ports A and B report something other than value 0 when port C is output with value 0.
3105	The ports A and B report something other than the test pattern output on port C.

COMMUNICATION BOARD TEST
NUMBER DEFINITIONS

23 MAY 1984

ANDROBOT TOPO I/O

(Corrected)

Solder Side

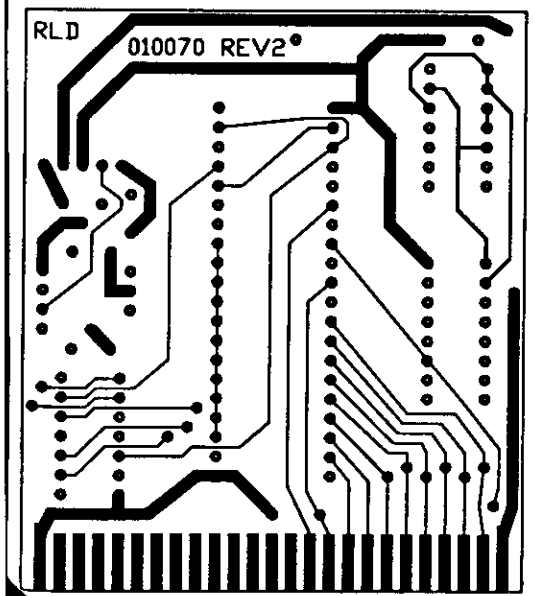
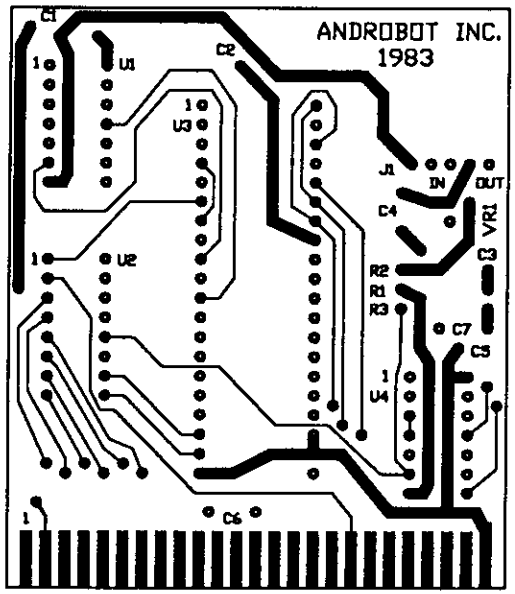
Component Side