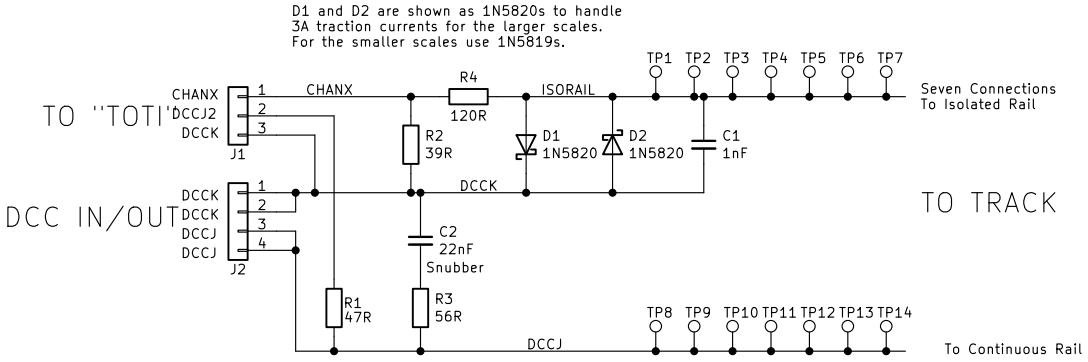

* R1 and R4 sense the traction current. The diodes are there to protect them from high currents. They also form a potential divider to limit the voltage on "CHANX" to +/−250mV in the event of a short circuit in the monitored track section.

R5 sets the sensitivity of the cicuit to 10K.

H1 H2 H3 H4

Sheet: /
File: Connection Unit.kicad_sch

Title: Connection Unit

Size: A4	Date: 2021-12-31	**Rev: ALPHA**
KiCad E.D.A. kicad 6.0.6-3a73a75311~116~ubuntu20.04.1		Id: 1/1