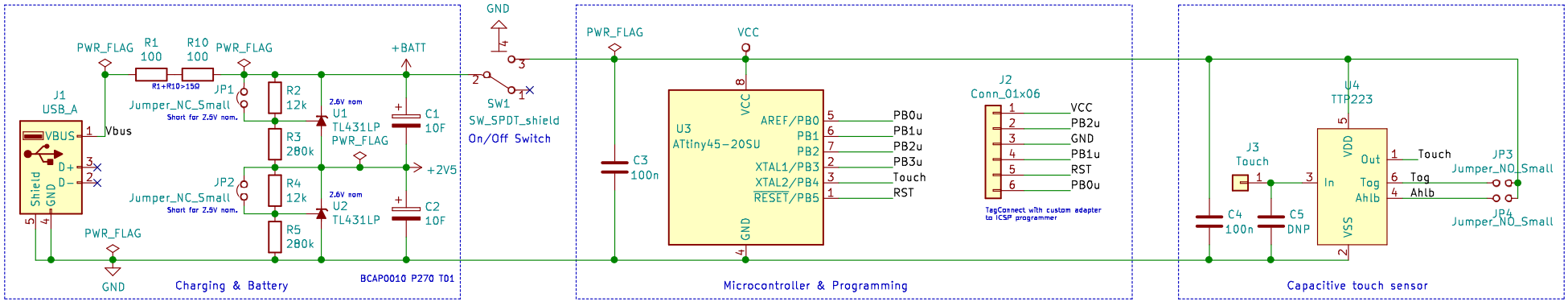


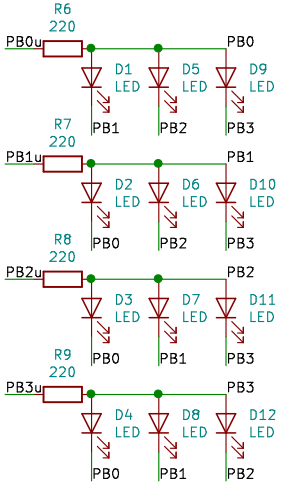


**Xavier Bourlot**

Sheet: /

File: christmas_tree.sch

**Title: PCB Christmas Tree**

| | | |
|---|---|---|
| Size: A4 | Date: 2021-11-08 | **Rev: A** |
| KiCad E.D.A. kicad 5.1.5+dfsg1-2build2 | | Id: 1/1 |