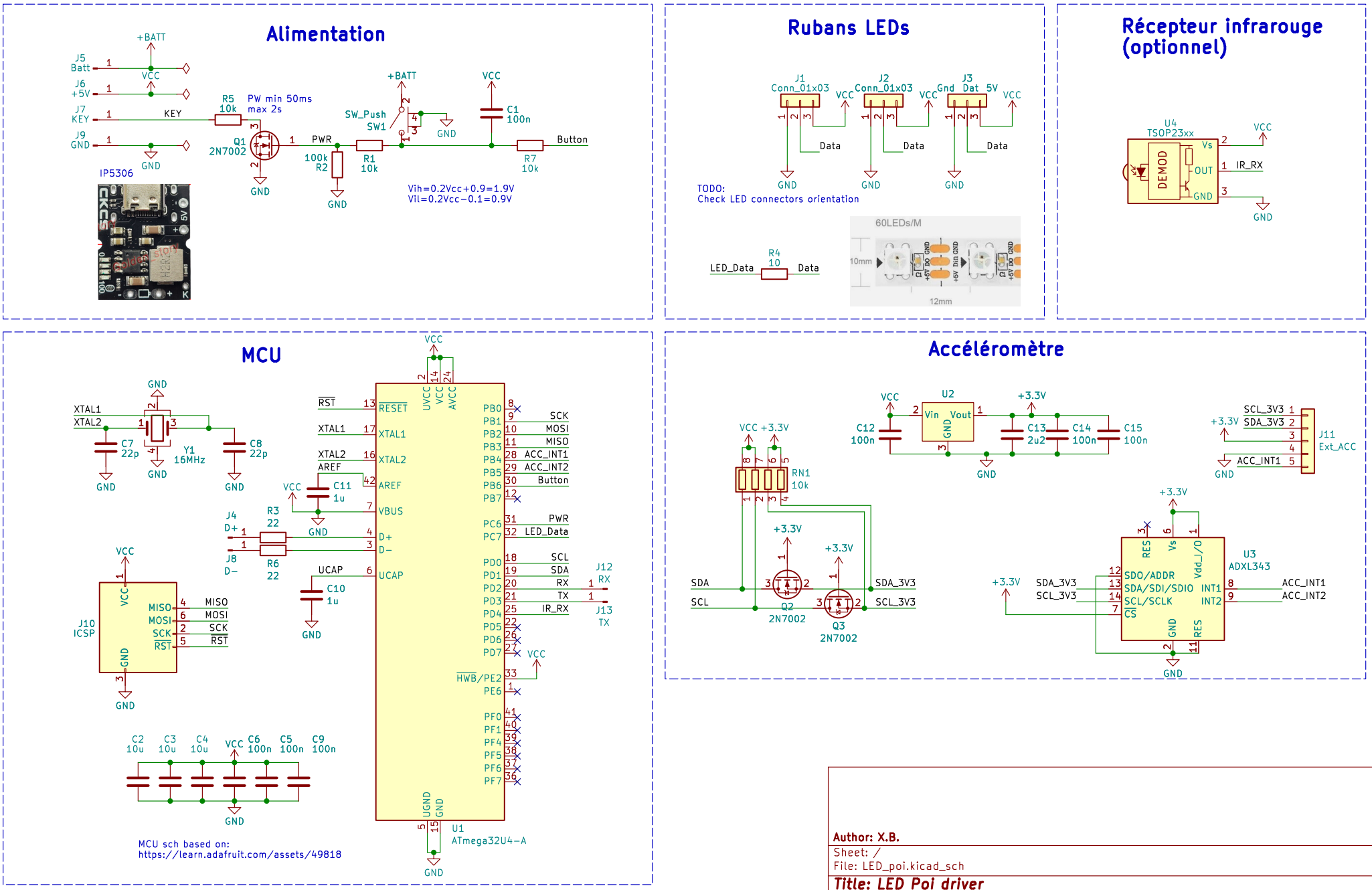

Author: X.B.

Sheet: /

File: LED_poi.kicad_sch

Title: LED Poi driver

Size: A4	Date: 2024-01-03	Rev: A
KiCad E.D.A. eeschema (7.0.0)		Id: 1/1