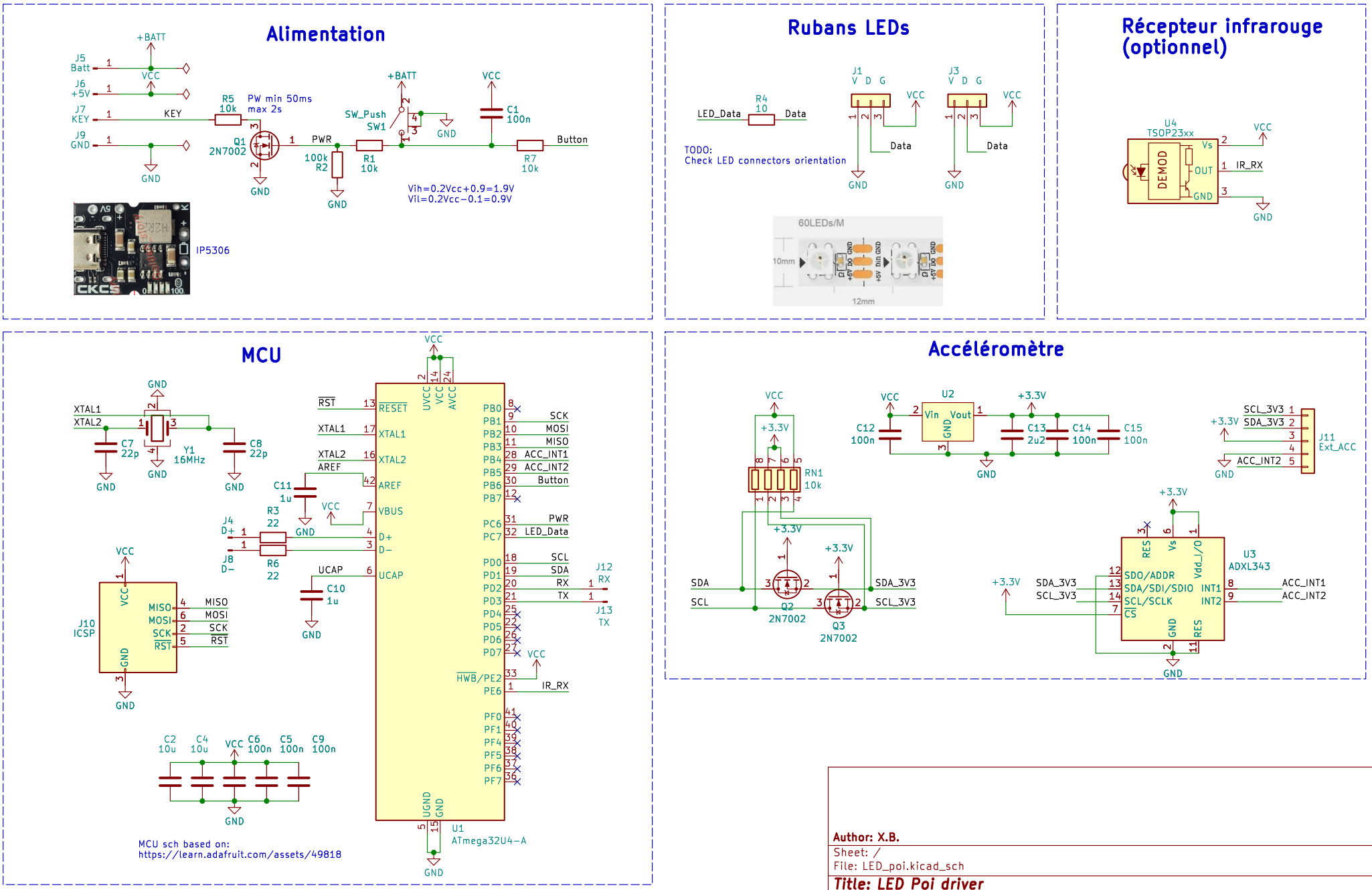
Alimentation
+BATT
J5 Batt
VCC
J6 +5V
J7 KEY
KEY
R5 10k
PW min 50ms max 2s
J9 GND
GND
Q1 2N7002
PWR
100k R2
R1 10k
SW_Push SW1
C1 100n
Button
R7 10k
Vih=0.2Vcc+0.9=1.9V
Vil=0.2Vcc−0.1=0.9V
IP5306
Rubans LEDs
R4 10
LED_Data
Data
J1 V D G
J3 V D G
TODO:
Check LED connectors orientation
60LEDs/M
10mm
12mm
Récepteur infrarouge (optionnel)
U4 TSOP23xx
DEMOD
Vs
OUT
IR_RX
MCU
XTAL1
XTAL2
C7 22p
Y1 16MHz
C8 22p
RST
AREF
C11 1u
R3 22
R6 22
J4 D+
J8 D−
UCAP
C10 1u
J10 ICSP
MISO
MOSI
SCK
RST
C2 10u
C4 10u
C6 100n
C5 100n
C9 100n
RESET
VBUS
PB0
PB1
PB2
PB3
PB4
PB5
PB6
PB7
PC6
PC7
PD0
PD1
PD2
PD3
PD4
PD5
PD6
PD7
HWB/PE2
PE6
PF0
PF1
PF4
PF5
PF6
PF7
ACC_INT1
ACC_INT2
LED_Data
SCL
SDA
RX
TX
J12 RX
J13 TX
U1 ATmega32U4-A
MCU sch based on:
https://learn.adafruit.com/assets/49818
Accéléromètre
RN1 10k
Q2 2N7002
Q3 2N7002
SDA_3V3
SCL_3V3
C12 100n
U2
Vin
Vout
C13 2u2
C14 100n
C15 100n
J11 Ext_ACC
U3 ADXL343
SDO/ADDR
SDA/SDI/SDIO
SCL/SCLK
CS
INT1
INT2
Vdd_I/O
RES
Author: X.B.
Sheet: /
File: LED_poi.kicad_sch
Title: LED Poi driver
Size: A4
Date: 2024-01-03
Rev: A
KiCad E.D.A. kicad (7.0.0)
Id: 1/1