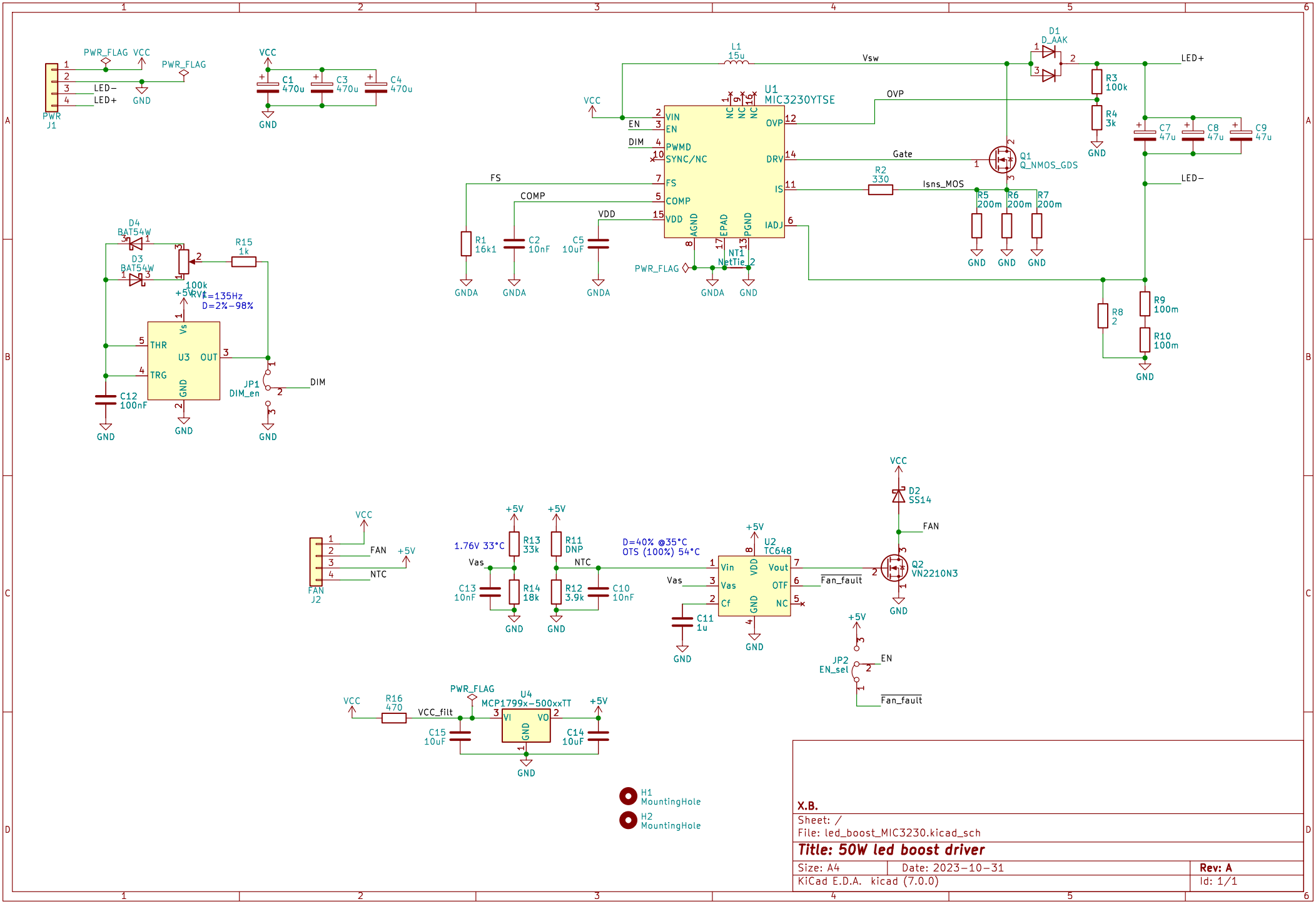

X.B.

Sheet: /

File: led_boost_MIC3230.kicad_sch

Title: 50W led boost driver

Size: A4	Date: 2023−10−31	Rev: A
KiCad E.D.A. kicad (7.0.0)		Id: 1/1