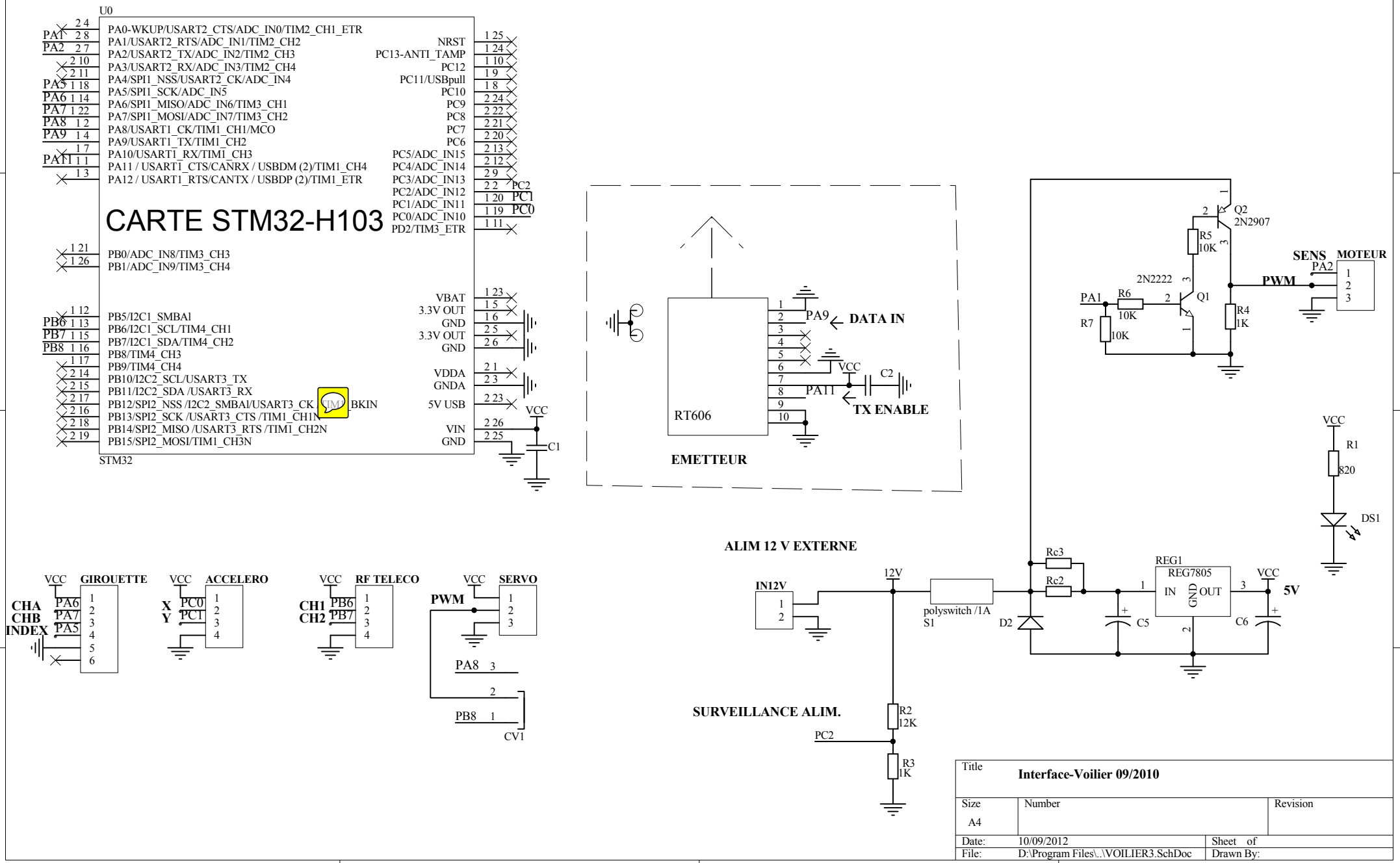
U0
CARTE STM32-H103
STM32
PA0-WKUP/USART2_CTS/ADC_IN0/TIM2_CH1_ETR
PA1/USART2_RTS/ADC_IN1/TIM2_CH2
PA2/USART2_TX/ADC_IN2/TIM2_CH3
PA3/USART2_RX/ADC_IN3/TIM2_CH4
PA4/SPI1_NSS/USART2_CK/ADC_IN4
PA5/SPI1_SCK/ADC_IN5
PA6/SPI1_MISO/ADC_IN6/TIM3_CH1
PA7/SPI1_MOSI/ADC_IN7/TIM3_CH2
PA8/USART1_CK/TIM1_CH1/MCO
PA9/USART1_TX/TIM1_CH2
PA10/USART1_RX/TIM1_CH3
PA11 / USART1_CTS/CANRX / USBDM (2)/TIM1_CH4
PA12 / USART1_RTS/CANTX / USBDP (2)/TIM1_ETR
NRST
PC13-ANTI_TAMP
PC12
PC11/USBpull
PC10
PC9
PC8
PC7
PC6
PC5/ADC_IN15
PC4/ADC_IN14
PC3/ADC_IN13
PC2/ADC_IN12
PC1/ADC_IN11
PC0/ADC_IN10
PD2/TIM3_ETR
PB0/ADC_IN8/TIM3_CH3
PB1/ADC_IN9/TIM3_CH4
PB5/I2C1_SMBAl
PB6/I2C1_SCL/TIM4_CH1
PB7/I2C1_SDA/TIM4_CH2
PB8/TIM4_CH3
PB9/TIM4_CH4
PB10/I2C2_SCL/USART3_TX
PB11/I2C2_SDA /USART3_RX
PB12/SPI2_NSS /I2C2_SMBAl/USART3_CK
PB13/SPI2_SCK /USART3_CTS /TIM1_CH1N
PB14/SPI2_MISO /USART3_RTS /TIM1_CH2N
PB15/SPI2_MOSI/TIM1_CH3N
VBAT
3.3V OUT
GND
VDDA
GNDA
5V USB
VIN
VCC
C1
RT606
EMETTEUR
DATA IN
TX ENABLE
C2
Q2
2N2907
R5
10K
2N2222
Q1
R6
10K
R7
10K
R4
1K
SENS
MOTEUR
PWM
R1
820
DS1
ALIM 12 V EXTERNE
IN12V
12V
polyswitch /1A
S1
D2
Rc3
Rc2
C5
REG1
REG7805
IN
GND
OUT
C6
5V
SURVEILLANCE ALIM.
R2
12K
R3
1K
GIROUETTE
CHA
CHB
INDEX
ACCELERO
X
Y
RF TELECO
CH1
CH2
SERVO
CV1
Title
Interface-Voilier 09/2010
Size
A4
Number
Revision
Date: 10/09/2012
Sheet of
File: D:\Program Files\..\VOILIER3.SchDoc
Drawn By: