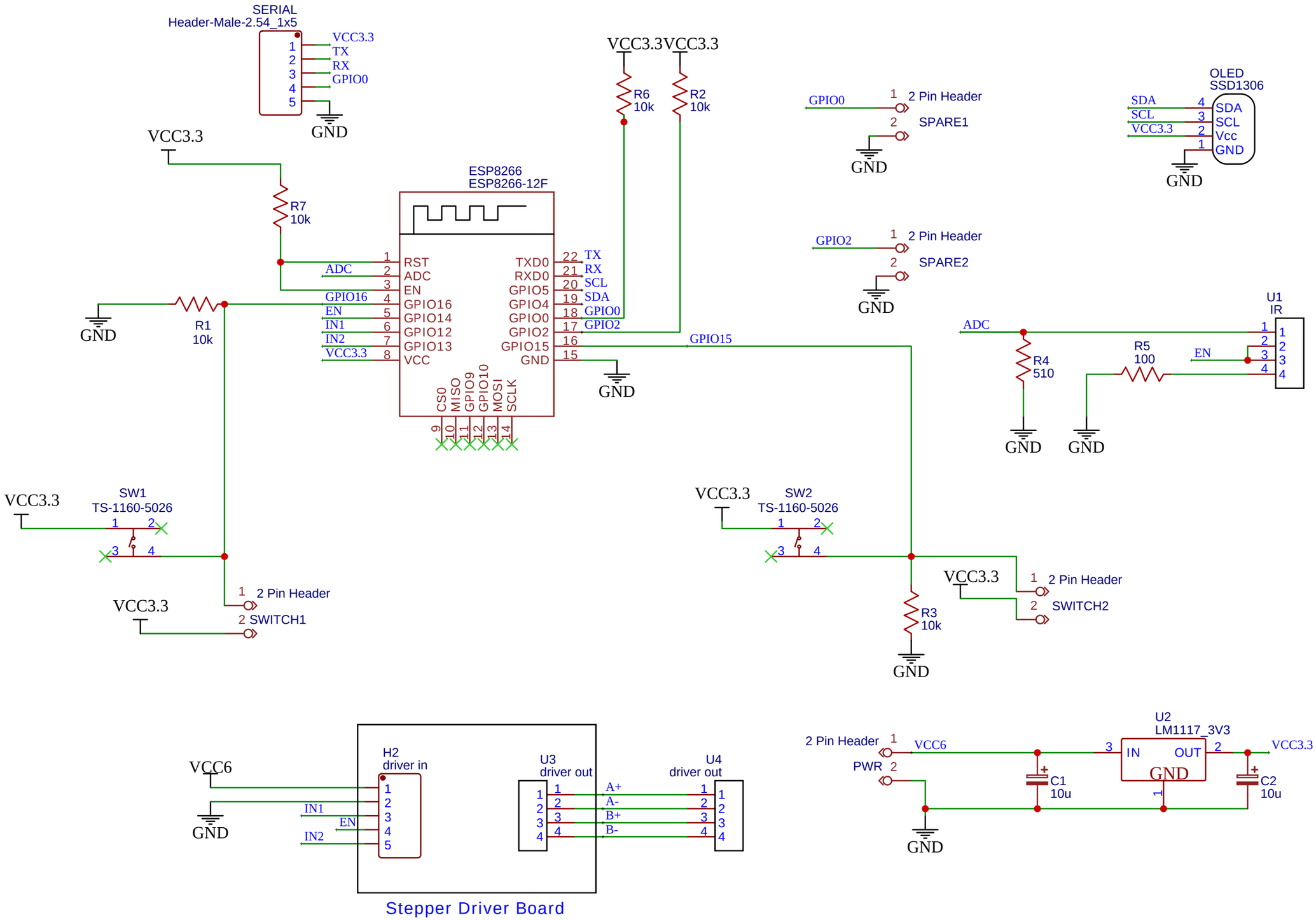

TITLE: Feeder https://github.com/reivaxy/iotFeeder	REV: 2.0
EasyEDA	Company: Reivax Sheet: 1/1
	Date: 2022-03-16 Drawn By: Reivaxy