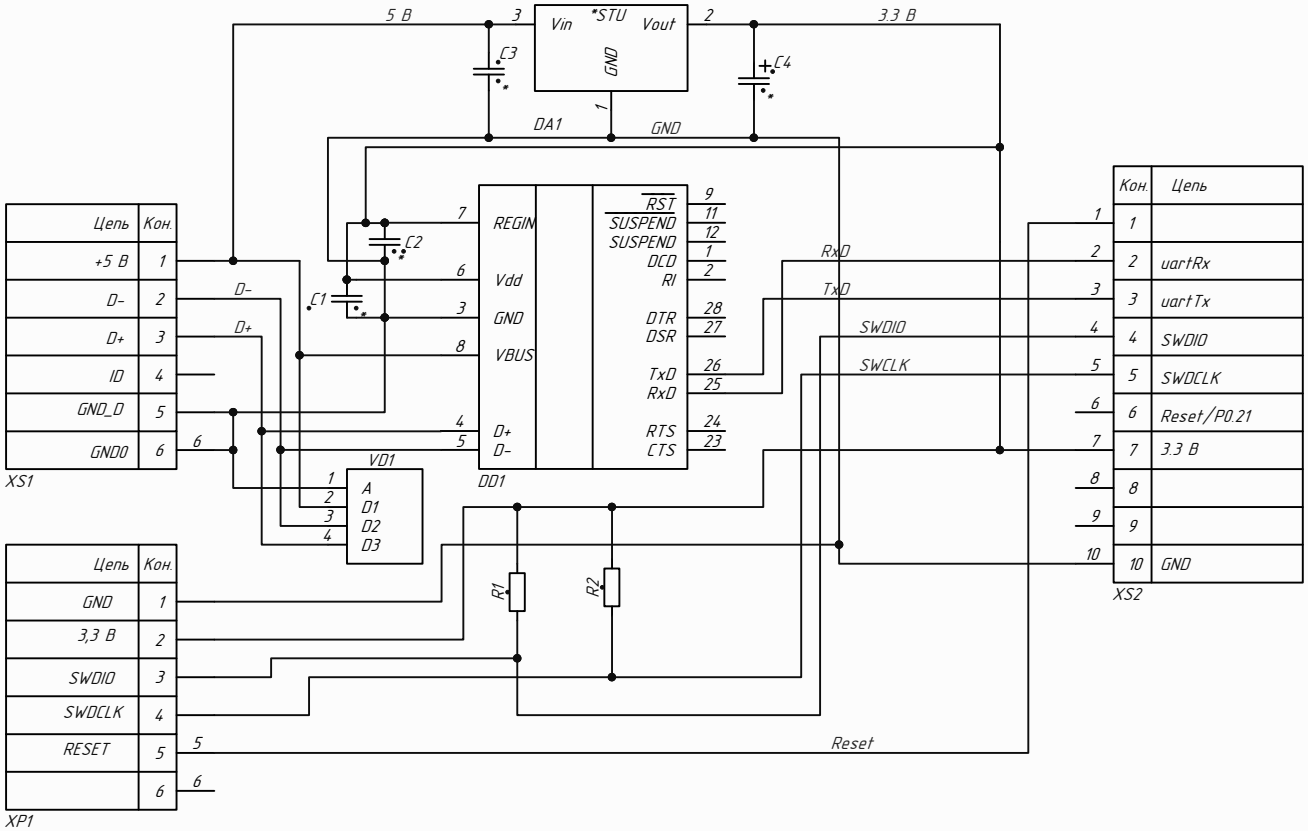

Title		
Size A4	Number	Revision
Date: 12.01.2018		Sheet of
File: D:\nrf52\..\ble_connector.SchDoc		Drawn By: