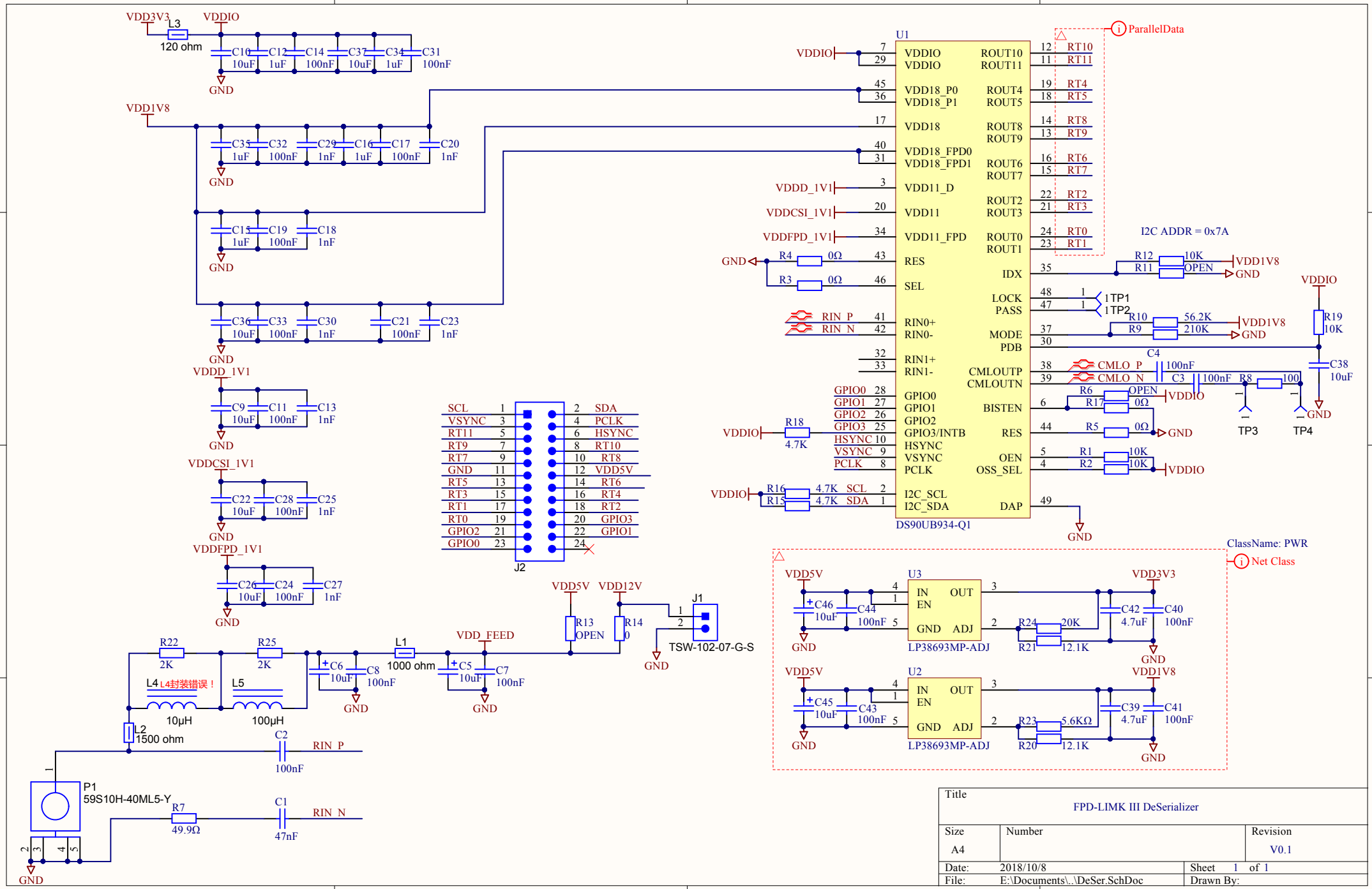


| | | | |
|---|---|---|---|
| Title | FPD-LIMK III DeSerializer | | |
| Size A4 | Number | | Revision V0.1 |
| Date: 2018/10/8 | | Sheet 1 of 1 | |
| File: E:\Documents\..\DeSer.SchDoc | | Drawn By: | |