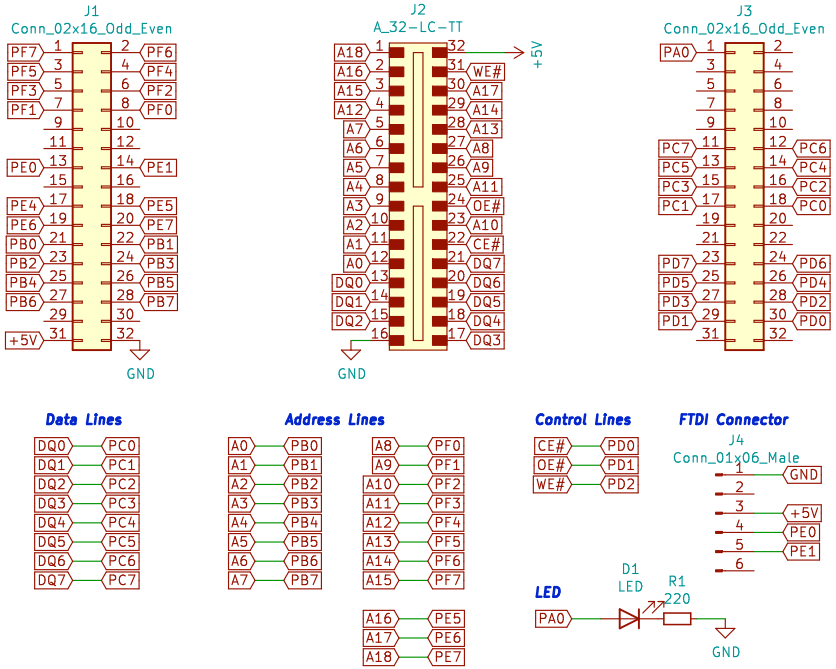


Sheet: /
File: EEPROM Burner.sch

**Title:** EEPROM Burner SST39SF010A / SST39SF020A / SST39SF040

| | | |
|---|---|---|
| Size: A4 | Date: July 1, 2020 | Rev: A |
| KiCad E.D.A. kicad (5.1.6-0-10_14) Karl Matthias | | Id: 1/1 |