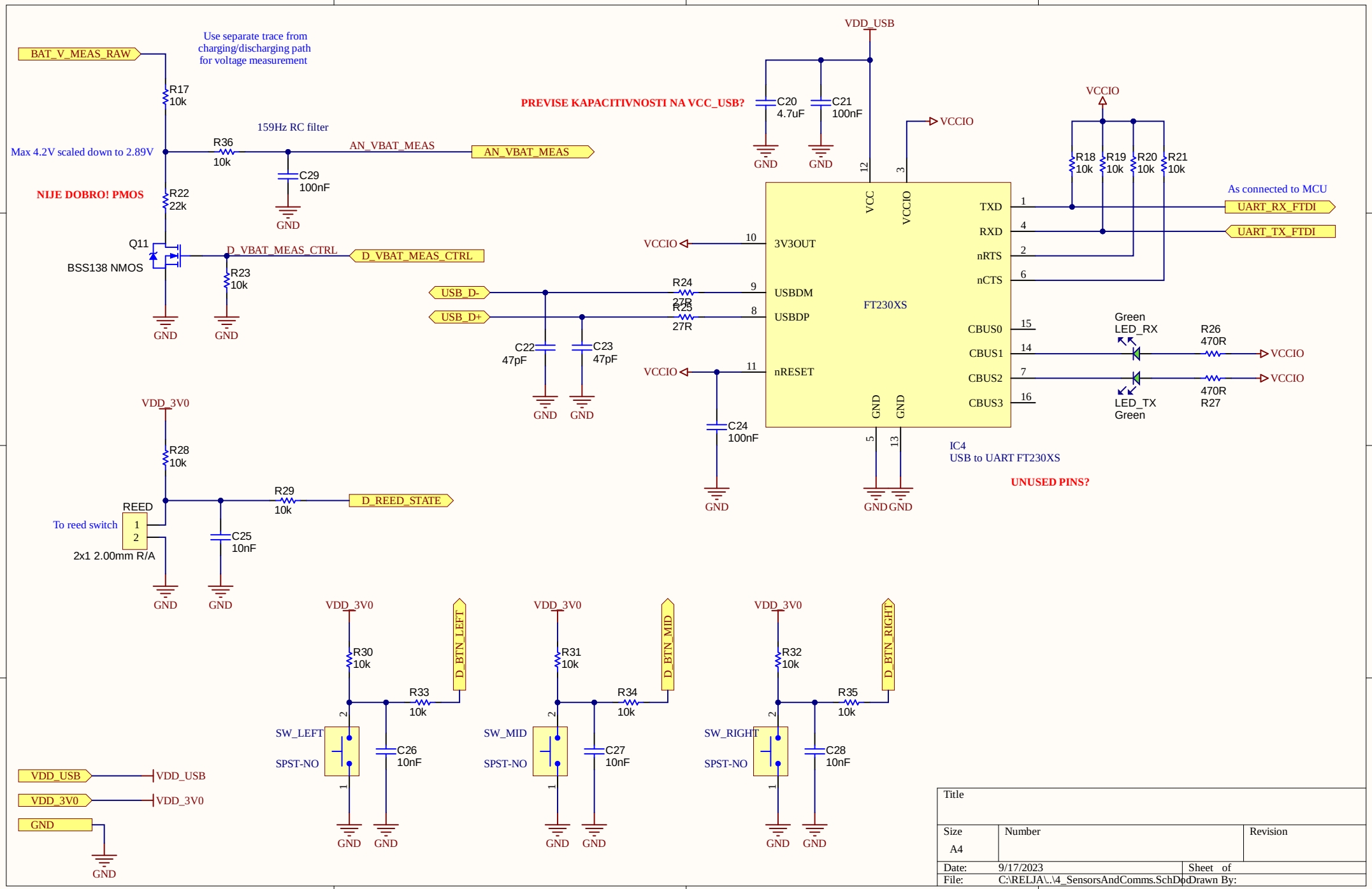
BAT_V_MEAS_RAW
Use separate trace from charging/discharging path for voltage measurement
R17 10k
Max 4.2V scaled down to 2.89V
R36 10k
159Hz RC filter
AN_VBAT_MEAS
AN_VBAT_MEAS
C29 100nF
NIJE DOBRO! PMOS
R22 22k
Q11
BSS138 NMOS
D_VBAT_MEAS_CTRL
D_VBAT_MEAS_CTRL
R23 10k
GND
VDD_USB
PREVISE KAPACITIVNOSTI NA VCC_USB?
C20 4.7uF
C21 100nF
VCCIO
VCCIO
R18 10k
R19 10k
R20 10k
R21 10k
As connected to MCU
UART_RX_FTDI
UART_TX_FTDI
VCC
VCCIO
TXD
RXD
nRTS
nCTS
3V3OUT
USBDM
USBDP
nRESET
FT230XS
CBUS0
CBUS1
CBUS2
CBUS3
USB_D-
USB_D+
R24 27R
R25 27R
C22 47pF
C23 47pF
C24 100nF
Green LED_RX
R26 470R
LED_TX Green
R27 470R
IC4
USB to UART FT230XS
UNUSED PINS?
VDD_3V0
R28 10k
REED
To reed switch
2x1 2.00mm R/A
R29 10k
D_REED_STATE
C25 10nF
R30 10k
R33 10k
D_BTN_LEFT
SW_LEFT
SPST-NO
C26 10nF
R31 10k
R34 10k
D_BTN_MID
SW_MID
C27 10nF
R32 10k
R35 10k
D_BTN_RIGHT
SW_RIGHT
C28 10nF
VDD_USB
VDD_3V0
Title
Size A4
Number
Revision
Date: 9/17/2023
Sheet of
File: C:\RELJA\..\4_SensorsAndComms.SchDoc
Drawn By: