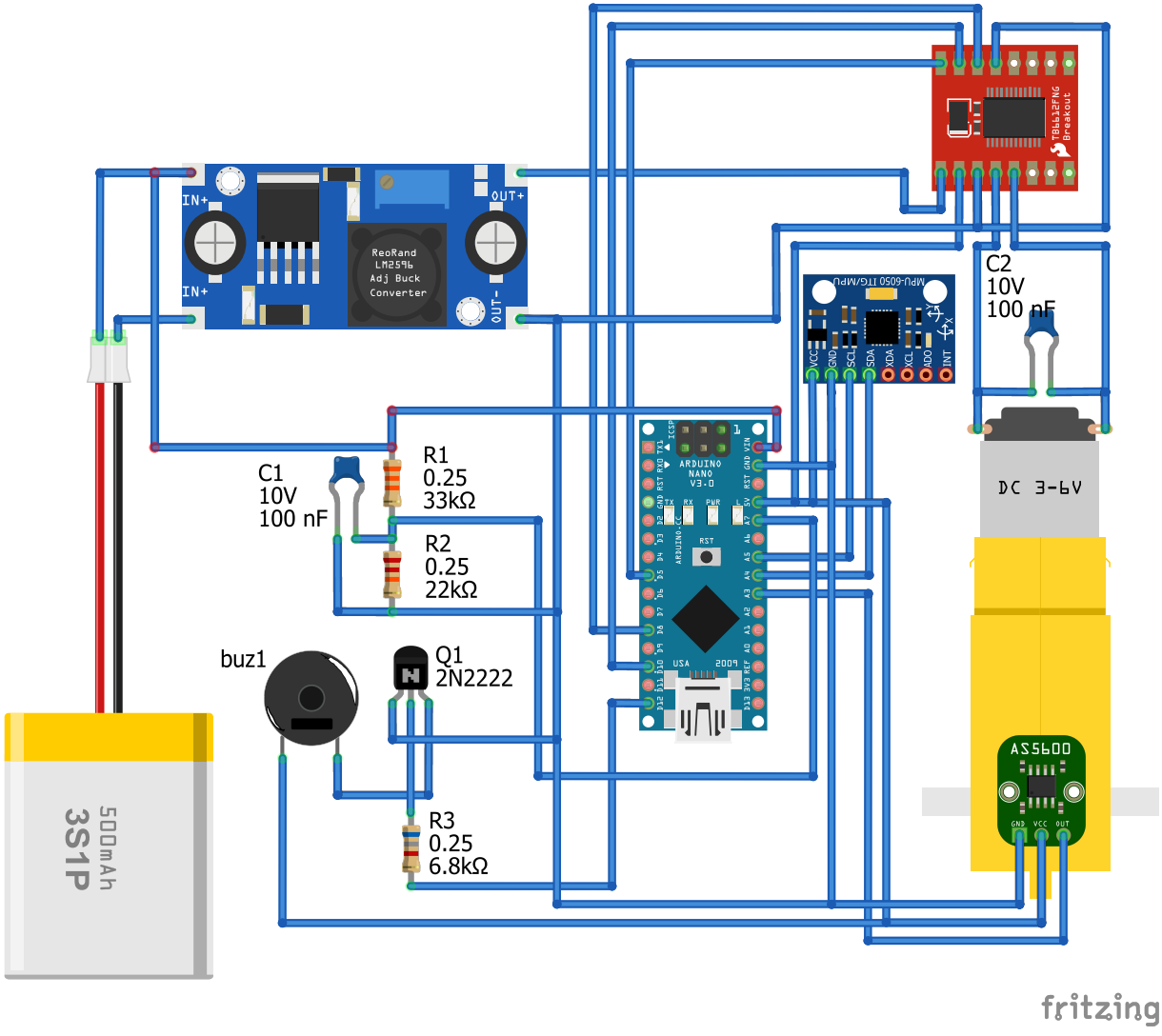
IN+
IN+
OUT+
OUT−
ReoRand
LM2596
Adj Buck
Converter
TB6612FNG
Breakout
MPU-6050 ITG/MPU
VCC
GND
SCL
SDA
XDA
XCL
ADO
INT
C2
10V
100 nF
ARDUINO
NANO
V3.0
RST
USA
2009
DC 3-6V
AS5600
GND
VCC
OUT
C1
10V
100 nF
R1
0.25
33kΩ
R2
0.25
22kΩ
buz1
Q1
2N2222
R3
0.25
6.8kΩ
500mAh
3S1P
fritzing