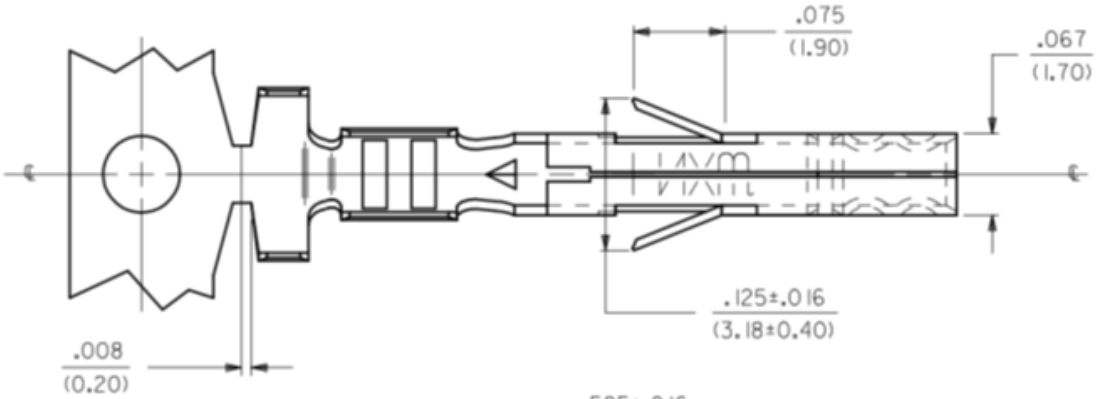
.075
(1.90)
.067
(1.70)
.125±.016
(3.18±0.40)
.008
(0.20)
CUT OFF TAB

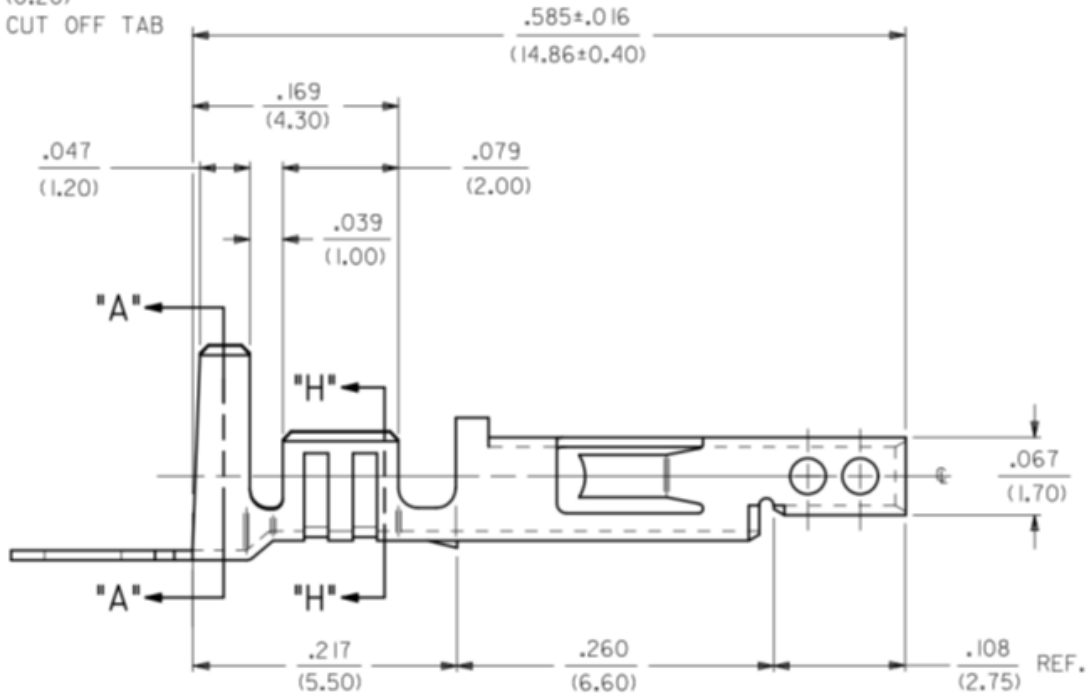
.585±.016
(14.86±0.40)
.169
(4.30)
.047
(1.20)
.079
(2.00)
.039
(1.00)
"A"
"H"
"A"
"H"
.067
(1.70)
.217
(5.50)
.260
(6.60)
.108
(2.75)
REF.

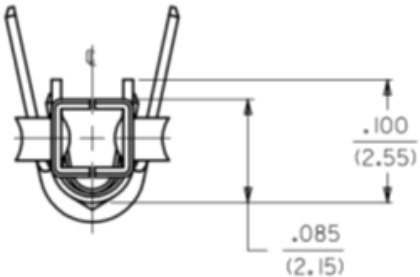
.100
(2.55)
.085
(2.15)