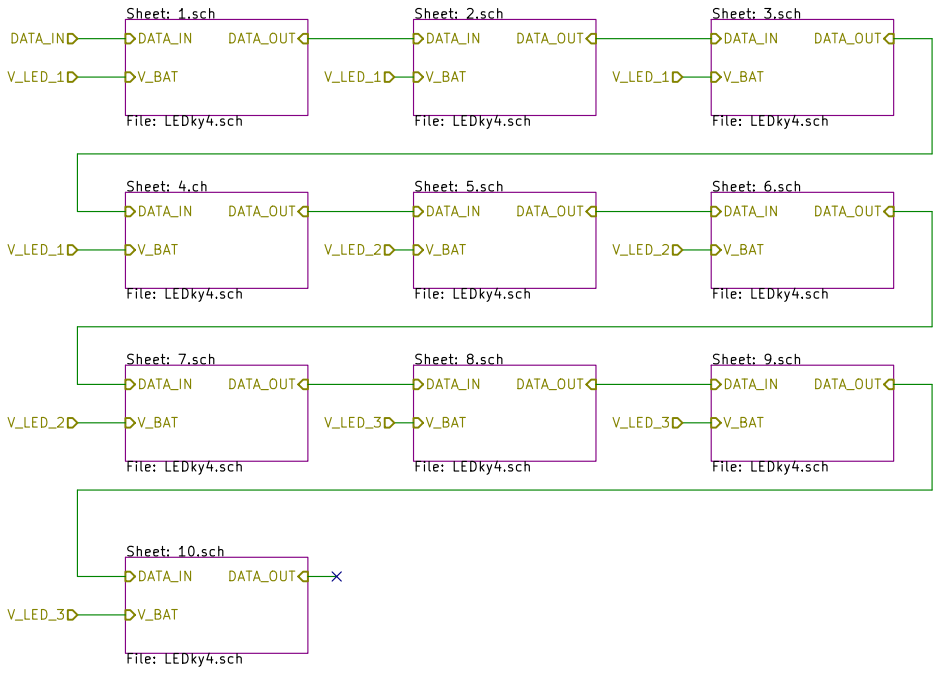

Sheet: /herni_LED.sch/
File: LEDky40.sch

Title:

Size: A4	Date:	**Rev:**
KiCad E.D.A. kicad (5.1.9)-1		Id: 5/28