INTELLEC® SERIES II
MICROCOMPUTER
DEVELOPMENT SYSTEM
DOUBLE-DENSITY
DISKETTE SUBSYSTEM

schematic drawings

intel®

INTELLEC® SERIES II MICROCOMPUTER DEVELOPMENT SYSTEM DOUBLE-DENSITY DISKETTE SUBSYSTEM

Manual Order Number: 9800425-02 Rev. B

Additional copies of this manual or other Intel literature may be obtained from:

Literature Department
Intel Corporation
3065 Bowers Avenue
Santa Clara, CA 95051

The information in this document is subject to change without notice.

Intel Corporation makes no warranty of any kind with regard to this material, including, but not limited to, the implied warranties of merchantability and fitness for a particular purpose. Intel Corporation assumes no responsibility for any errors that may appear in this document. Intel Corporation makes no commitment to update nor to keep current the information contained in this document.

Intel Corporation assumes no responsibility for the use of any circuitry other than circuitry embodied in an Intel product. No other circuit patent licenses are implied.

Intel software products are copyrighted by and shall remain the property of Intel Corporation. Use, duplication or disclosure is subject to restrictions stated in Intel's software license, or as defined in ASPR 7-104.9(a)(9).

No part of this document may be copied or reproduced in any form or by any means without the prior written consent of Intel Corporation.

The following are trademarks of Intel Corporation and may be used only to identify Intel products:

BXP	Intellec	Multibus
i	iSBC	Multimodule
ICE	iSBX	PROMPT
iCS	Library Manager	Promware
Insite	MCS	RMX
Intel	Megachassis	UPI
Intelevision	Micromap	μScope

and the combination of ICE, iCS, iSBC, iSBX, MCS, or RMX and a numerical suffix.

Copyright © 1980 Intel Corporation
Intel Corporation, 3065 Bowers Avenue, Santa Clara, California 95051

CONTENTS

TITLE	NUMBER
CONTROLLER	
Printed Wiring Assembly, F.D. INTFC Dual Density	1001036
Schematic, FDC Interface Double Density (6 sheets)	123178
Printed Wiring Assembly, Floppy Disk Controller Channel	1000467
Schematic, Floppy Disk Controller Channel (4 sheets)	2000469
Controller Cable Dual Floppy	4002175
DRIVE CHASSIS	
Systems Interconn. Diagram, MDS-7XX (2 sheets)	2001926
Power Supply, MDS-71X/72X/73X (3 sheets)	4501498
Power Supply, Schematic, MDS-7XX (4 sheets)	2002677
Printed Wiring Assembly Signal Adaptor (sic)	1002242
Schematic, Signal Adapter	2002244
DC Signal Cable, Floppy Disk	4001496
Peripheral Cable Interconnect	4002176

THIS DRAWING CONTAINS INFORMATION WHICH IS THE PROPRIETARY PROPERTY OF INTEL CORPORATION. THIS DRAWING IS RECEIVED IN CONFIDENCE AND ITS CONTENTS MAY NOT BE DISCLOSED WITHOUT THE PRIOR WRITTEN CONSENT OF INTEL CORPORATION.

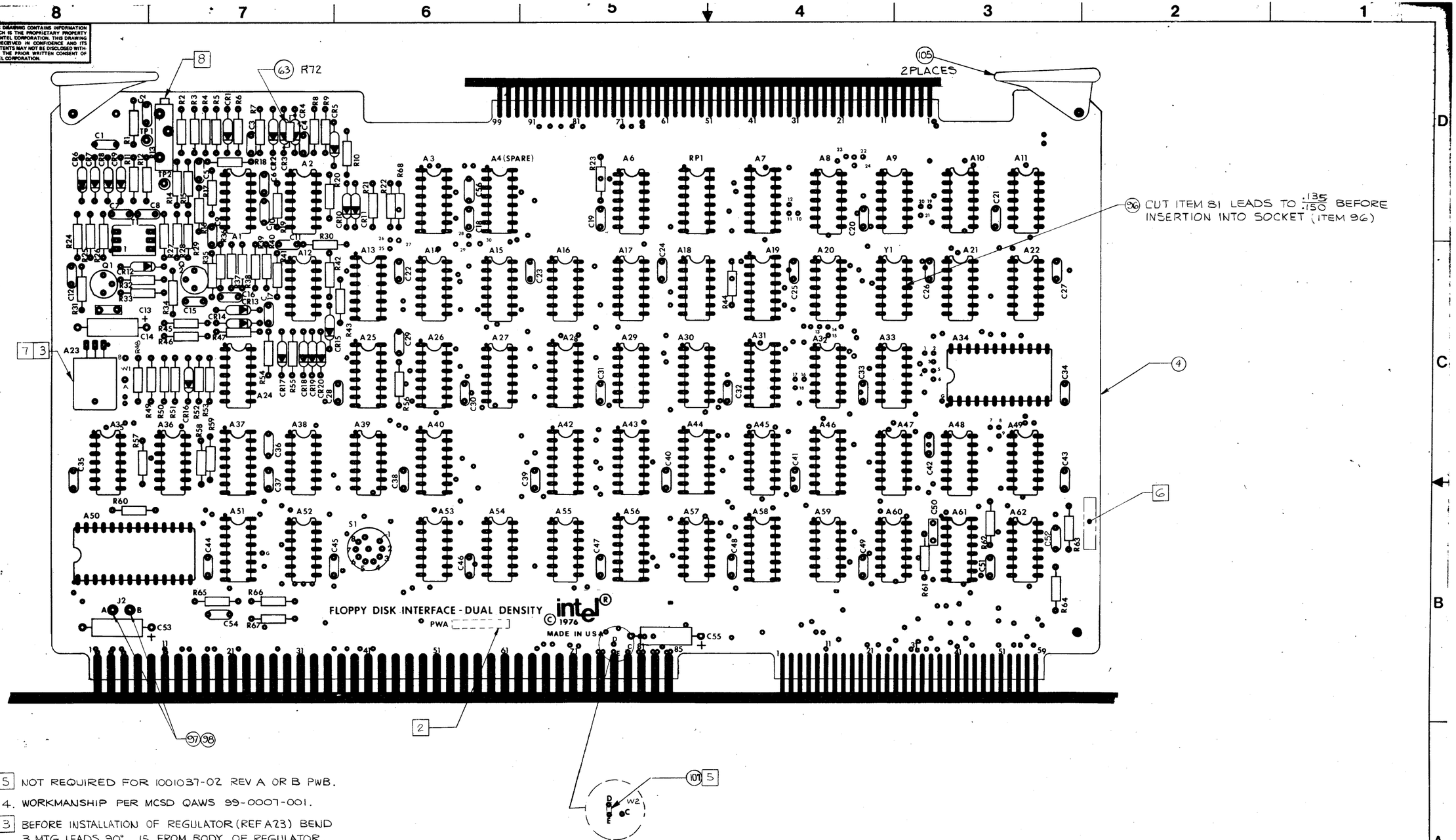

5 NOT REQUIRED FOR 1001037-02 REV A OR B PWB.

4. WORKMANSHIP PER MCSD QAWS 99-0007-001.

3 BEFORE INSTALLATION OF REGULATOR (REF A23) BEND 3 MTG LEADS 90°, .15 FROM BODY OF REGULATOR.

2 MARK ASSY DASH NO. AND REV LEVEL WITH CONTRASTING PERM. COLOR, NON-CONDUCTIVE, .12 INCH HIGH APPROX WHERE SHOWN.

1. ASSY PART NO. IS 1001036-04. ASSY AND PL ARE TRACKING DOCUMENT.

NOTES: UNLESS OTHERWISE SPECIFIED

8 SEAL R13 WITH GLYPTOL OR EQUIVALENT AFTER TEST AND ADJUSTMENT.

7 INSULATE UNDER A23 HEATSINK (ITEM 32) USING ITEM 109.

6 MARK ASSY VENDOR ID WITH CONTRASTING PERM. COLOR, NON-CONDUCTIVE, .12 INCH HIGH, APPROX WHERE SHOWN.

intel © INTEL 1977 3065 BOWERS AVE. SANTA CLARA CALIF 95051

PRINTED WIRING ASSEMBLY
F.D. INTFC DUAL DENSITY

SIZE	DEPT	DRAWING NO	REV
D	MCSD	P1001036	P

CODE | SHEET 1 OF 1

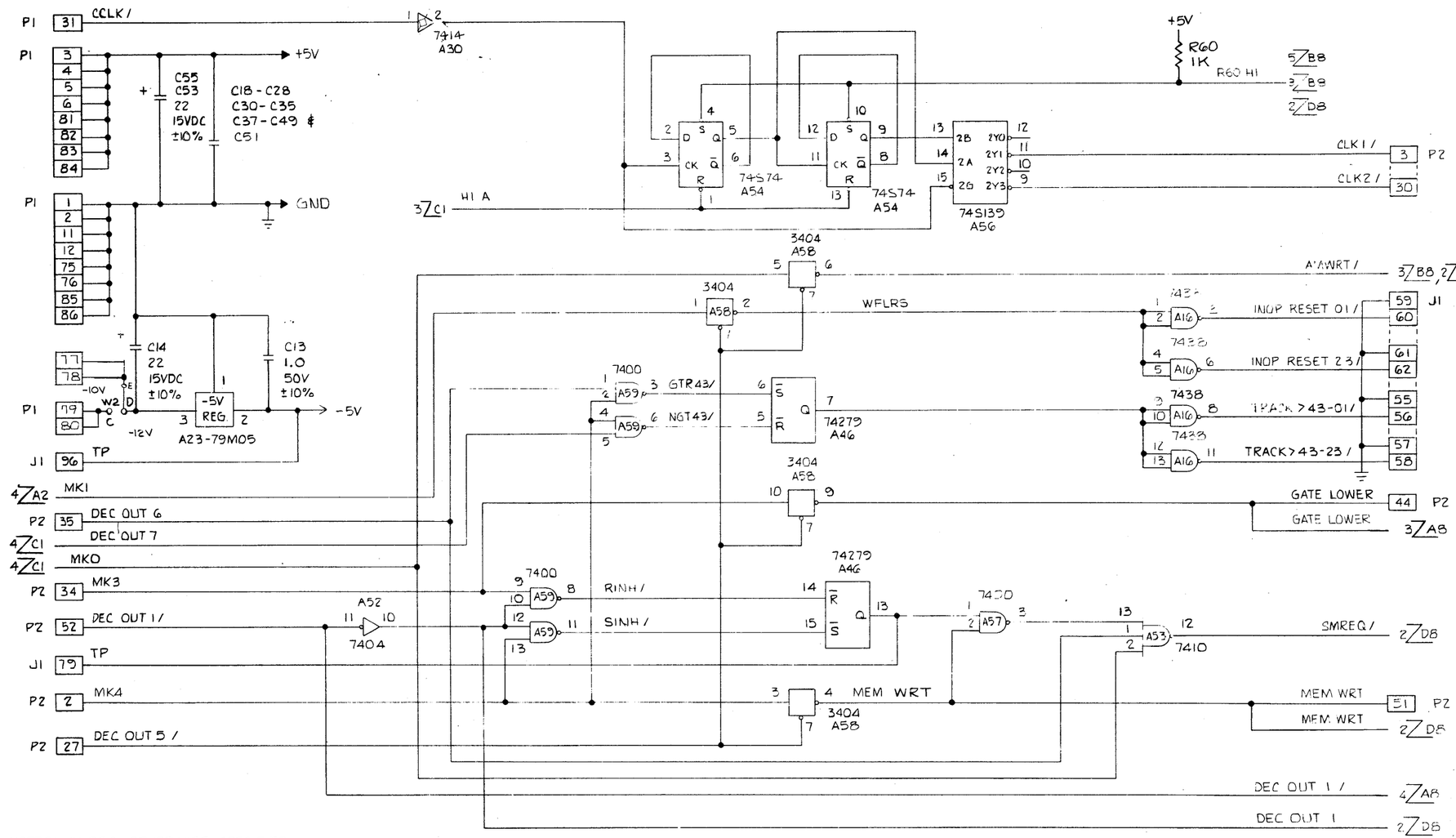

NOTES: UNLESS OTHERWISE SPECIFIED.

1. REMOVED
2. RESISTANCE VALUES ARE IN OHMS ±5%, 1/4W.
3. CAPACITANCE VALUES ARE IN MICROFARADS
4. CAPACITORS ARE 0.1UF, +80%, -20%, 50V, MONO.
5. DIODES ARE IN4148. #
6. THIS SWITCH SYMBOL —o—#—o— # DENOTES A MANUFACTURING CUT/JUMP OPTION FOR MFM ENCODING (DEFAULT = M²FM)

THIS DRAWING CONTAINS INFORMATION WHICH IS THE PROPRIETARY PROPERTY OF INTEL CORPORATION. THIS DRAWING IS RECEIVED IN CONFIDENCE AND ITS CONTENTS MAY NOT BE DISCLOSED WITHOUT THE PRIOR WRITTEN CONSENT OF INTEL CORPORATION.

intel © INTEL '79 3065 BOWERS AVE. SANTA CLARA CALIF. 95051

TITLE SCHEMATIC FDC INTERFACE DOUBLE DENSITY

SIZE	DCLC	CL CODE	RLSE LVL	DWG NO.	REV
D	13	01	P	123178	A

CODE: SHEET 1 OF 6

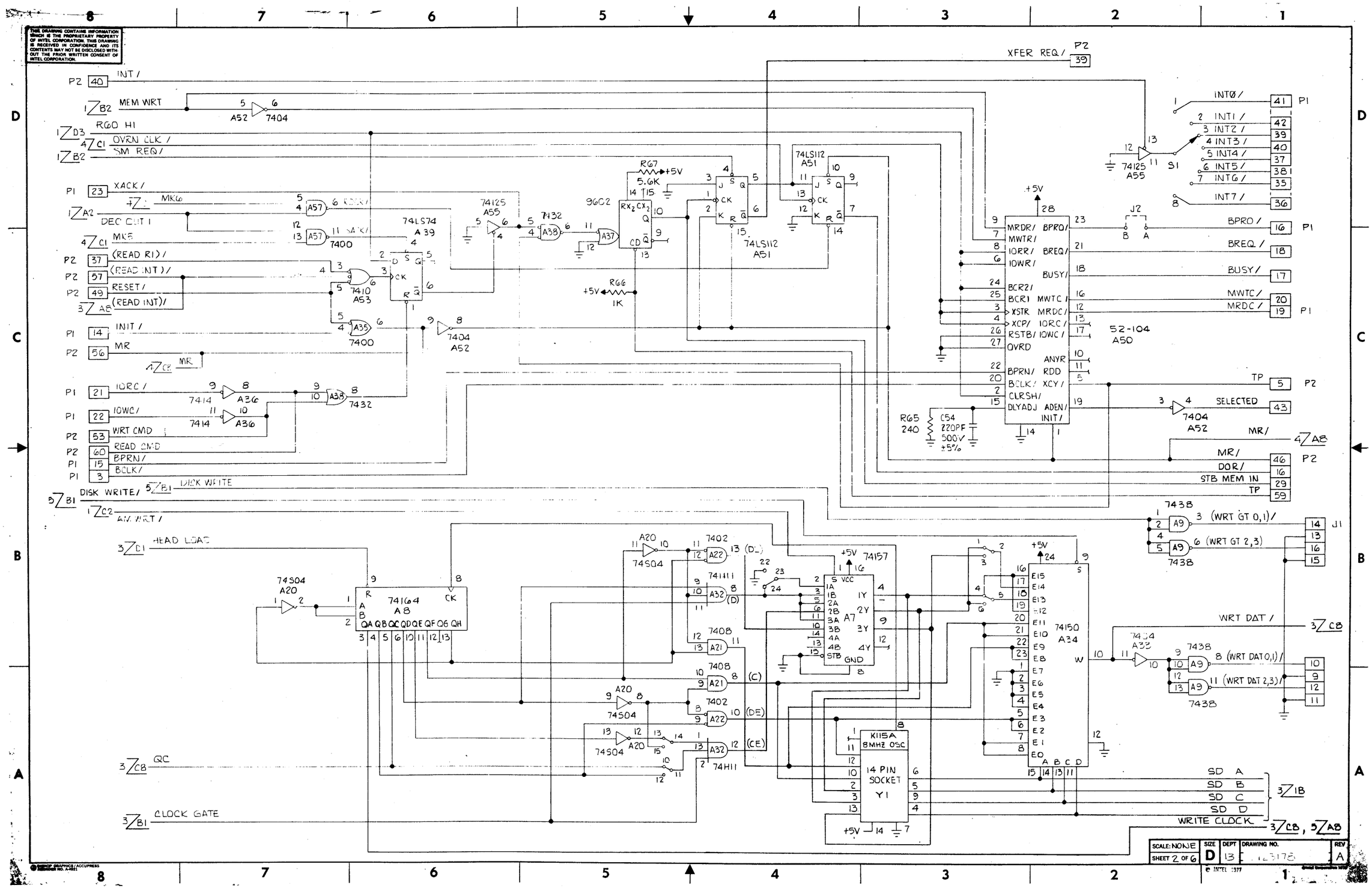
THIS DRAWING CONTAINS INFORMATION WHICH IS THE PROPRIETARY PROPERTY OF INTEL CORPORATION. THIS DRAWING IS RECEIVED IN CONFIDENCE AND ITS CONTENTS MAY NOT BE DISCLOSED WITHOUT THE PRIOR WRITTEN CONSENT OF INTEL CORPORATION.
XFER REQ /
INT /
MEM WRT
R60 HI
OVRN CLK /
SM REQ /
XACK /
DEC OUT 1
(READ RI) /
(READ INT) /
RESET /
INIT /
MR
IORC /
IOWC /
WRT CMD
READ CMD
BPRN /
BCLK /
DISK WRITE /
AM WRT /
HEAD LOAD
QC
CLOCK GATE
INT0 /
INT1 /
INT2 /
INT3 /
INT4 /
INT5 /
INT6 /
INT7 /
BPRO /
BREQ /
BUSY /
MWTC /
MRDC /
TP
SELECTED
MR /
DOR /
STB MEM IN
(WRT GT 0,1) /
(WRT GT 2,3) /
WRT DAT /
(WRT DAT 0,1) /
(WRT DAT 2,3) /
SD A
SD B
SD C
SD D
WRITE CLOCK
74LS74 A39
74LS112 A51
9602
74125 A55
74S04 A20
74164 A8
74157 A7
74150 A34
52-104 A50
K115A 8MHZ OSC
14 PIN SOCKET Y1
SCALE: NONE
SHEET 2 OF 6
SIZE D
DEPT 13
DRAWING NO.
REV A
© INTEL 1977

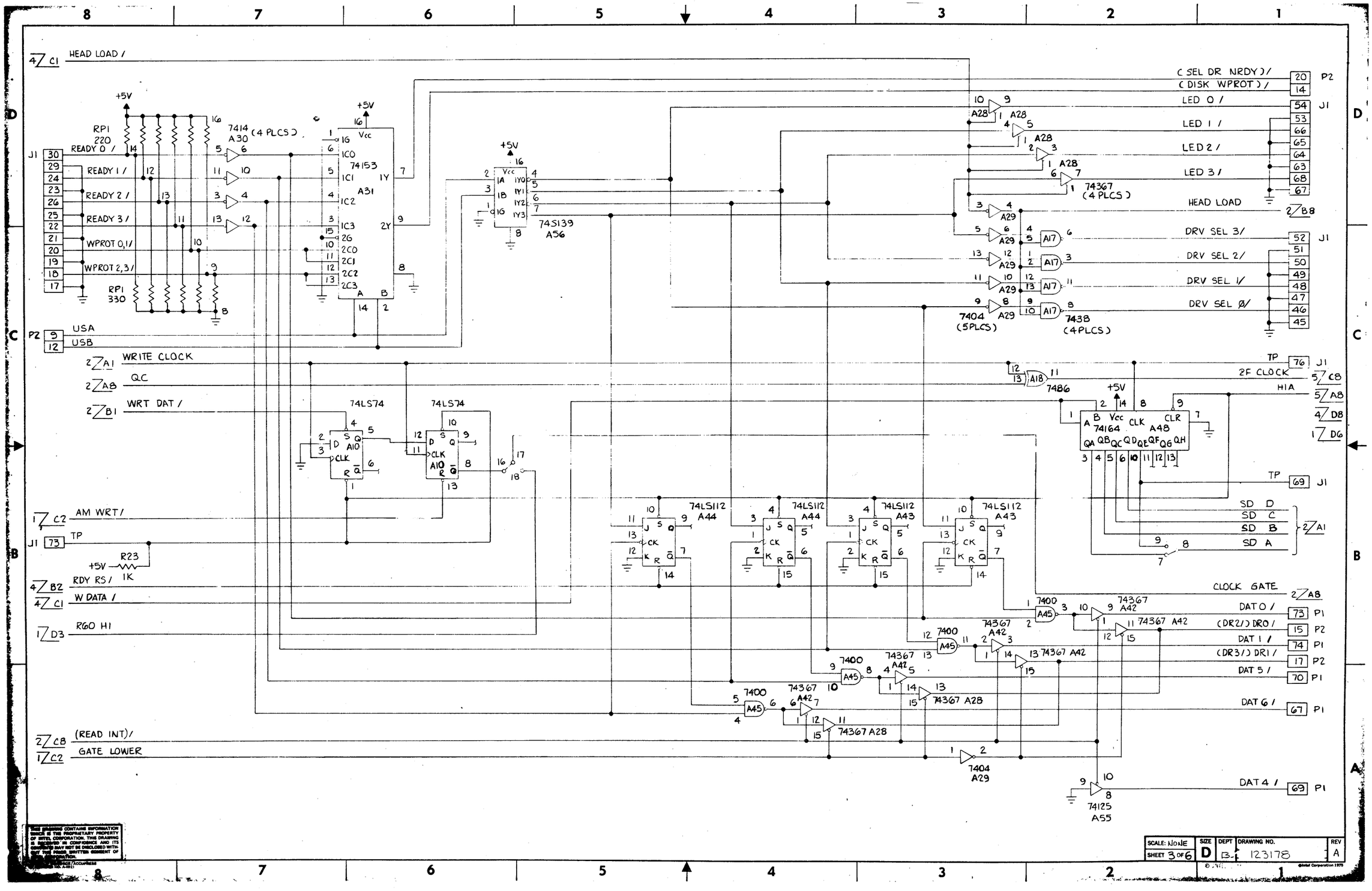
HEAD LOAD /
(SEL DR NRDY)/
(DISK WPROT)/
LED 0 /
LED 1 /
LED 2 /
LED 3 /
HEAD LOAD
DRV SEL 3/
DRV SEL 2/
DRV SEL 1/
DRV SEL Ø/
READY 0 /
READY 1 /
READY 2 /
READY 3 /
WPROT 0,1/
WPROT 2,3/
USA
USB
WRITE CLOCK
QC
WRT DAT /
AM WRT /
TP
RDY RS /
W DATA /
RGO HI
(READ INT)/
GATE LOWER
2F CLOCK
HIA
SD D
SD C
SD B
SD A
CLOCK GATE
DAT 0 /
(DR2/) DR0 /
DAT 1 /
(DR3/) DR1 /
DAT 5 /
DAT 6 /
DAT 4 /
74153 A31
74S139 A56
74LS74
74LS112 A44
74LS112 A43
74164 A48
74367 (4 PLCS)
7404 (5PLCS)
7438 (4PLCS)
7486
7400 A45
74367 A42
74367 A28
74125 A55
7404 A29
7414 A30 (4 PLCS)
RP1 220
RP1 330
R23 1K
SCALE: NONE
SHEET 3 OF 6
SIZE D
DEPT B
DRAWING NO. 123178
REV A

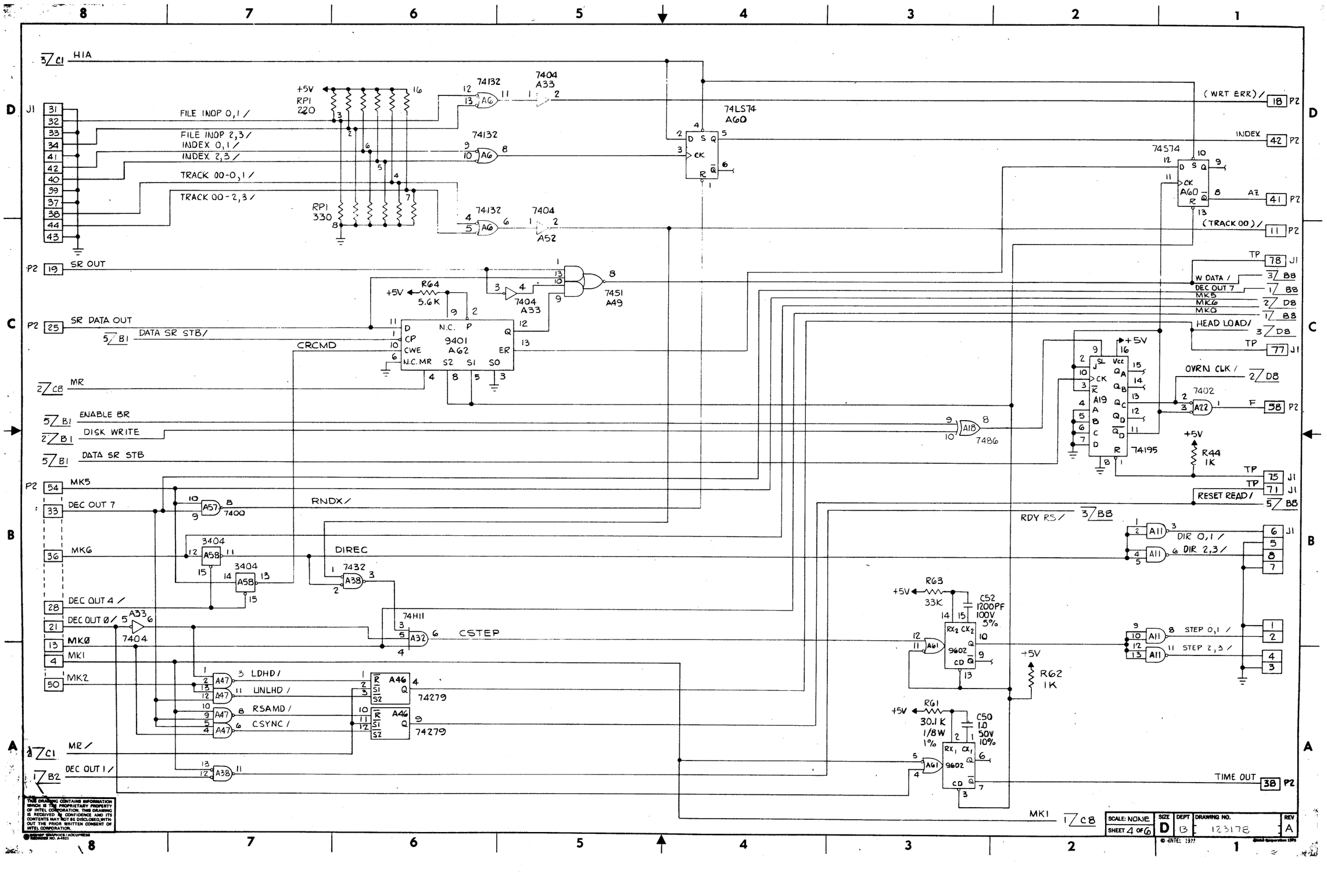

HIA
FILE INOP 0,1 /
FILE INOP 2,3 /
INDEX 0,1 /
INDEX 2,3 /
TRACK 00-0,1 /
TRACK 00-2,3 /
SR OUT
SR DATA OUT
DATA SR STB /
CRCMD
MR
ENABLE BR
DISK WRITE
DATA SR STB
MK5
DEC OUT 7
MK6
DEC OUT 4 /
DEC OUT 0 /
MK0
MK1
MK2
MR /
DEC OUT 1 /
RNDX /
DIREC
CSTEP
LDHD /
LINLHD /
RSAMD /
CSYNC /
74LS74
A60
74132
7404
A33
A52
7451
A49
9401
A62
74S74
A19
74195
7402
A22
7486
A18
7400
3404
7432
74H11
A32
74279
A46
A47
A38
A57
A58
A61
9602
R64
5.6K
R63
33K
C52
1200PF
100V
5%
R61
30.1K
1/8W
1%
C50
1.0
50V
10%
R62
1K
R44
1K
RDY RS /
DIR 0,1 /
DIR 2,3 /
STEP 0,1 /
STEP 2,3 /
(WRT ERR) /
INDEX
(TRACK 00) /
W DATA /
DEC OUT 7
MK5
MK6
MK0
HEAD LOAD /
OVRN CLK /
RESET READ /
TIME OUT
THIS DRAWING CONTAINS INFORMATION WHICH IS THE PROPRIETARY PROPERTY OF INTEL CORPORATION. THIS DRAWING IS RECEIVED IN CONFIDENCE AND ITS CONTENTS MAY NOT BE DISCLOSED WITHOUT THE PRIOR WRITTEN CONSENT OF INTEL CORPORATION.
SCALE: NONE
SHEET 4 OF 6
SIZE D
DEPT B
DRAWING NO. 123178
REV A
© INTEL 1977

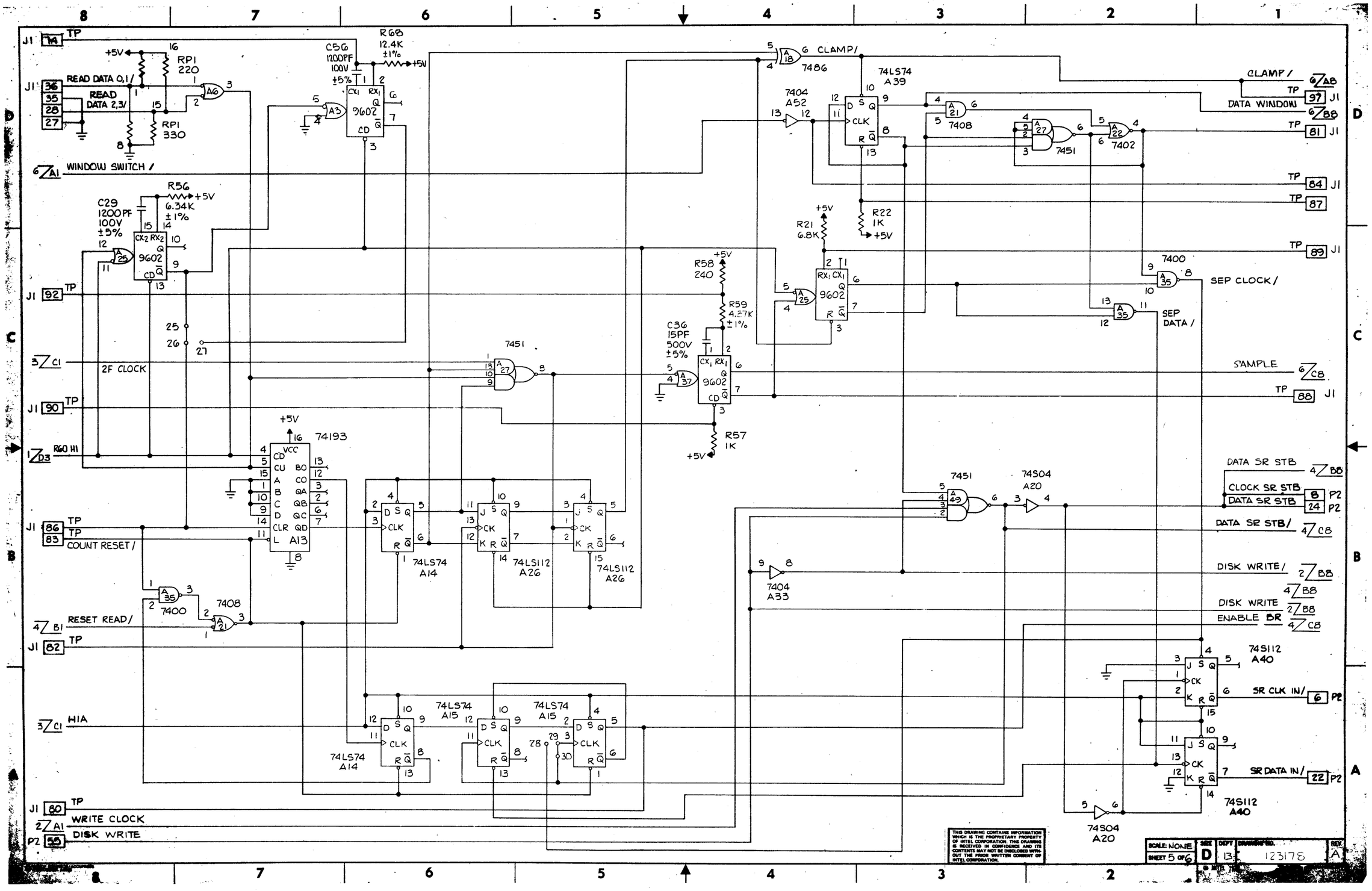
J1 14 TP
+5V
RP1 220
READ DATA 0,1/
J1 36
J1 35
READ DATA 2,3/
J1 28
J1 27
RP1 330
C56 1200PF 100V ±5%
R68 12.4K ±1%
+5V
9602
6 A1 WINDOW SWITCH /
C29 1200PF 100V ±5%
R56 6.34K ±1% +5V
J1 92 TP
25
26
27
3 C1 2F CLOCK
J1 90 TP
1 D3 R60 H1
7451
74193
J1 86 TP
J1 83 TP
COUNT RESET /
7400
7408
4 B1 RESET READ /
J1 82 TP
3 C1 H1A
74LS74 A14
74LS112 A26
J1 80 TP
2 A1 WRITE CLOCK
P2 50 DISK WRITE
7486
CLAMP /
7404 A52
74LS74 A39
7408
7451
7402
CLAMP / 6 A8
TP 97 J1
DATA WINDOW
6 B8
TP 81 J1
TP 84 J1
TP 87
R21 6.8K
R22 1K +5V
TP 89 J1
R58 240
R59 4.27K ±1%
C36 15PF 500V ±5%
R57 1K
7400
SEP CLOCK /
SEP DATA /
SAMPLE 6 C8
TP 88 J1
7404 A33
7451
7404 A20
DATA SR STB 4 B8
CLOCK SR STB
DATA SR STB 8 P2 24 P2
DATA SR STB / 4 C8
DISK WRITE / 2 B8 4 B8
DISK WRITE ENABLE BR 2 B8 4 C8
74S112 A40
SR CLK IN / 6 P2
SR DATA IN / 22 P2
74S04 A20
THIS DRAWING CONTAINS INFORMATION WHICH IS THE PROPRIETARY PROPERTY OF INTEL CORPORATION. THIS DRAWING IS RECEIVED IN CONFIDENCE AND ITS CONTENTS MAY NOT BE DISCLOSED WITHOUT THE PRIOR WRITTEN CONSENT OF INTEL CORPORATION.
SCALE: NONE
SHEET 5 OF 6
SIZE D
DEPT 13
DRAWING NO. 123178
REV A

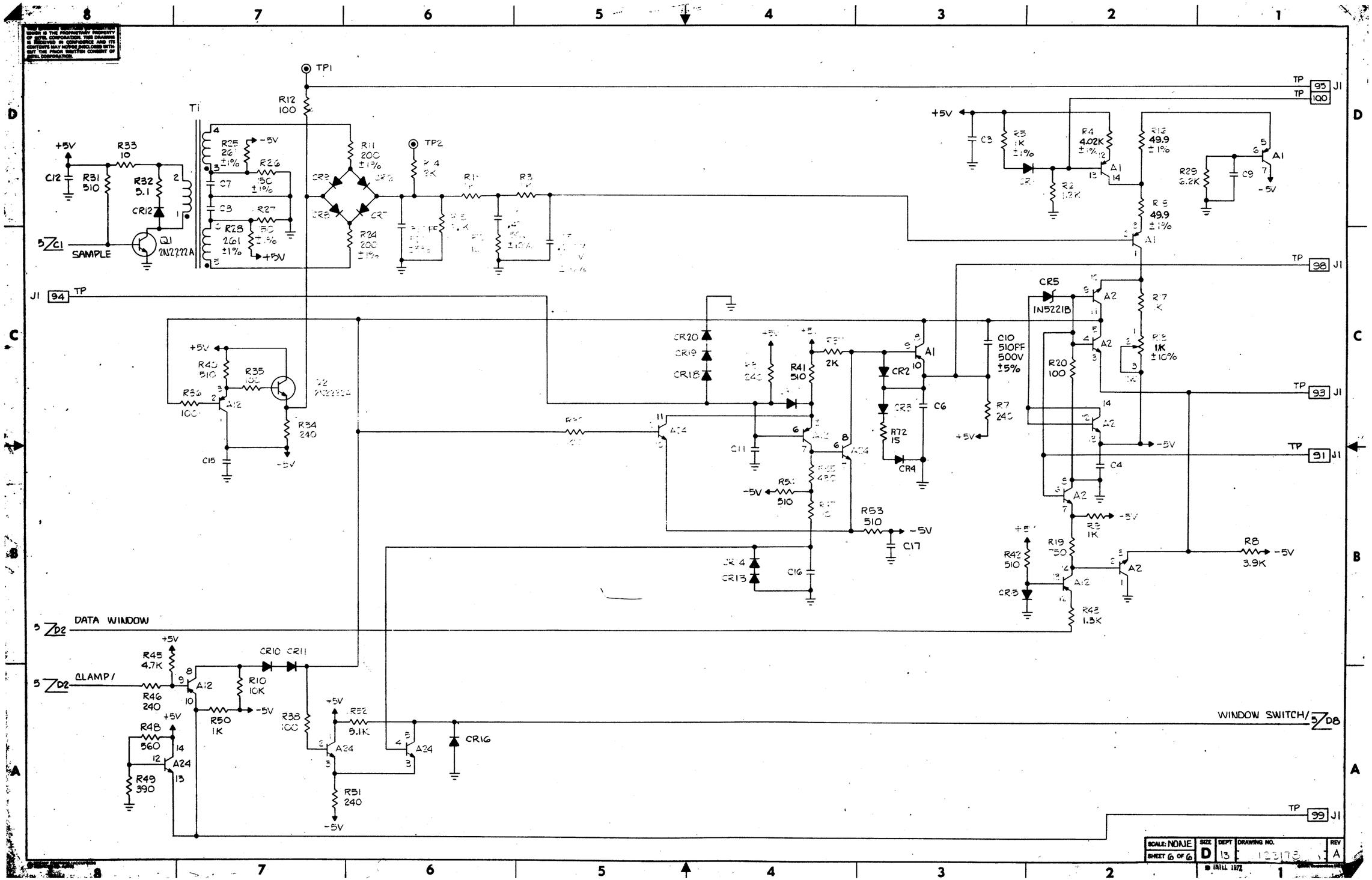

TP1
TP2
T1
R12 100
R11 200 ±1%
R24 200 ±1%
R33 10
R31 510
R32 5.1
CR12
Q1 2N2222A
SAMPLE
C12
+5V
-5V
R25 261 ±1%
R26 150 ±1%
R27 150 ±1%
R28 261 ±1%
C7
C8
R4 4.02K ±1%
R16 49.9 ±1%
R29 6.2K
C9
R5 1K ±1%
R2 1.2K
C3
R18 49.9 ±1%
J1 94 TP
TP 95 J1
TP 100
TP 98 J1
TP 93 J1
TP 91 J1
TP 99 J1
CR5 1N5221B
R17 1K
R13 1K ±10%
R20 100
C10 510PF 500V ±5%
R7 240
R41 510
R72 15
CR2
CR3
CR4
C6
C11
R53 510
C17
C16
CR13
R40 510
R35 100
R36 100
R34 240
C15
R42 510
R19 750
R43 1.3K
R8 3.9K
DATA WINDOW
CLAMP/
R45 4.7K
R46 240
R48 560
R49 390
R50 1K
R10 10K
CR10 CR11
R38 100
R52 5.1K
R51 240
CR16
WINDOW SWITCH/
SCALE: NONE
SHEET 6 OF 6
SIZE D
DEPT 13
DRAWING NO. 123178
REV A

THIS DRAWING CONTAINS INFORMATION WHICH IS THE PROPRIETARY PROPERTY OF INTEL CORPORATION. THIS DRAWING IS RECEIVED IN CONFIDENCE AND ITS CONTENTS MAY NOT BE DISCLOSED WITHOUT THE PRIOR WRITTEN CONSENT OF INTEL CORPORATION.

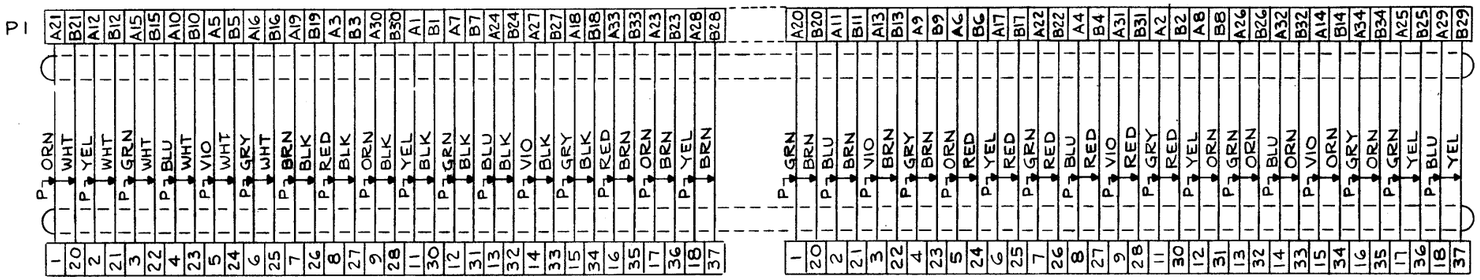

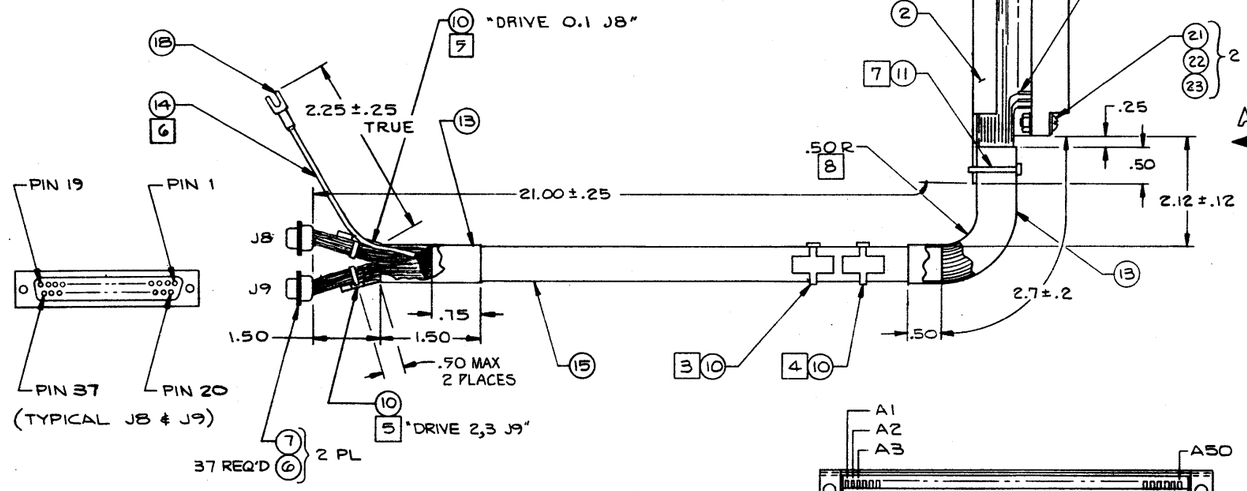

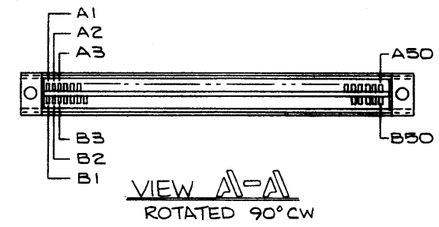

VIEW A-A
ROTATED 90° CW

8 FORM .5" RADIUS PRIOR TO SHRINKING SLEEVE IN PLACE.

7 PUT TIE WRAP KNOT UNDERNEATH AS SHOWN.

6 SHIELD OF CABLE TO BE ROLLED INTO SINGLE CONDUCTOR AND SLEEVED AS SHOWN.

5 MARK NOMENCLATURE AND/OR REF DES AS SHOWN IN PERMANENT CONTRAST INK.

4 MARK ASSY VENDOR ID WITH CONTRASTING PERM COLOR, .12 HIGH, APPROX WHERE SHOWN.

3 MARK ASSY PART NO. AND REV. LEVEL WITH CONTRASTING PERM COLOR. .12 HIGH, APPROX WHERE SHOWN.

2. WORKMANSHIP PER MCSD QAWS 99-0007-001.

1. ASSY PART NO. IS 4002175-01. ASSY & PL ARE TRACKING DOCUMENTS.

NOTES: UNLESS OTHERWISE SPECIFIED

intel®
3065 BOWERS AVE.
SANTA CLARA
CALIF. 95051

TITLE
CONTROLLER CABLE
DUAL FLOPPY

SIZE	CODE	DWG. NO.	REV
D	MCSD	P4002175	D

SCALE NONE SHEET 1 OF 1

9300021

THIS DRAWING CONTAINS INFORMATION WHICH IS THE PROPRIETARY PROPERTY OF INTEL CORPORATION. THIS DRAWING IS RECEIVED IN CONFIDENCE AND ITS CONTENTS MAY NOT BE DISCLOSED WITHOUT THE PRIOR WRITTEN CONSENT OF INTEL CORPORATION.

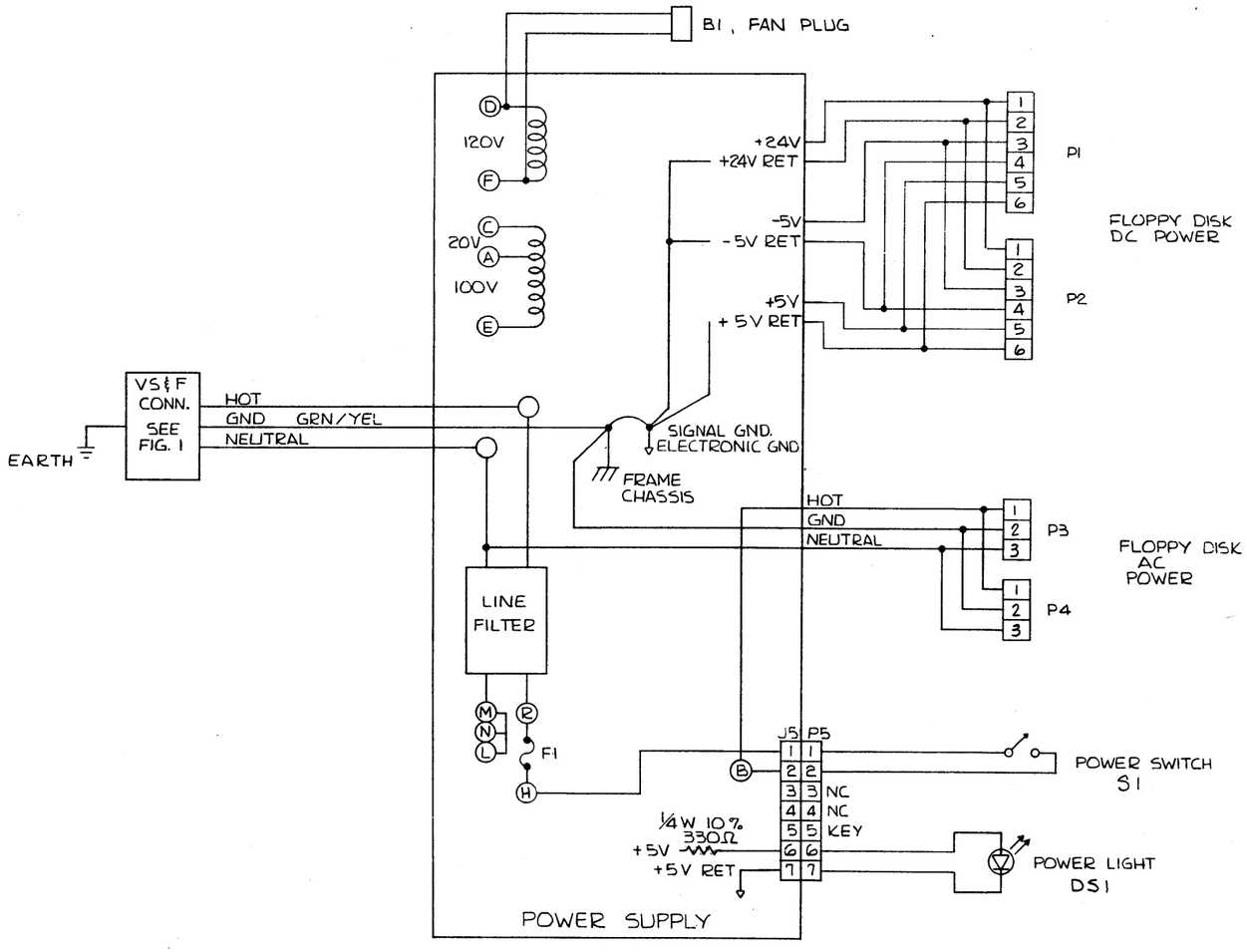

1. FUSE: 2 AMP. FAST-BLOW FOR 110 VAC,
1 AMP. FAST-BLOW FOR 240 VAC.

NOTES: UNLESS OTHERWISE SPECIFIED:

98-253A

intel 3065 BOWERS AVE. SANTA CLARA CALIF. 95051

TITLE: SYSTEMS INTERCONN. DIAGRAM MDS-7XX

SIZE	DEPT	DRAWING NO.	REV
D	MCSD	L2001926	B

CODE: SHEET 1 OF 2

THIS DRAWING CONTAINS INFORMATION WHICH IS THE PROPRIETARY PROPERTY OF INTEL CORPORATION. THIS DRAWING IS DISCLOSED IN CONFIDENCE AND ITS CONTENTS MAY NOT BE DISCLOSED WITHOUT THE PRIOR WRITTEN CONSENT OF INTEL CORPORATION.

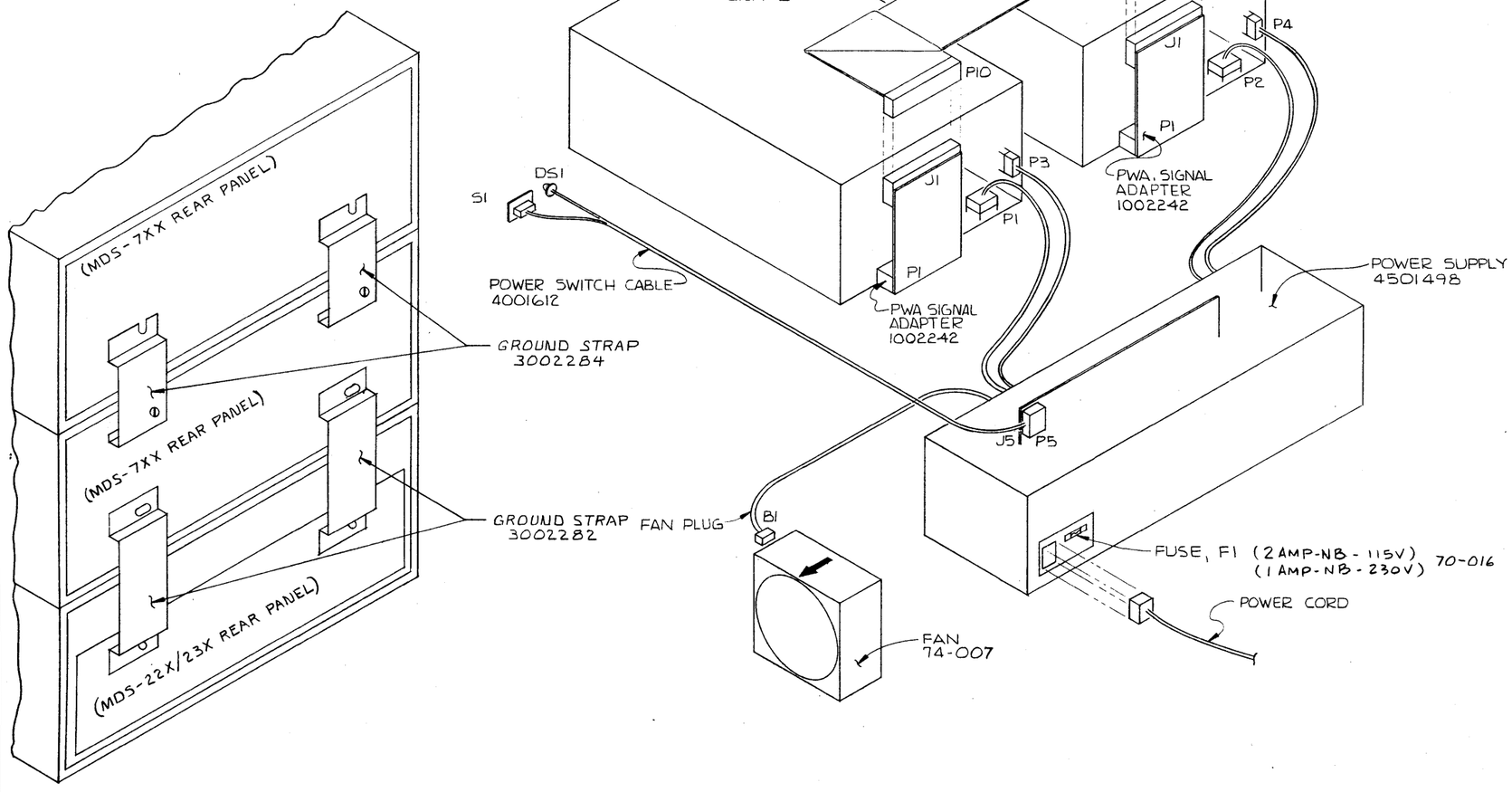

SCALE: NONE	SIZE	DEPT	DRAWING NO.	REV
SHEET 2 OF 2	C	MCSD	EL2001926	B

THE INFORMATION CONTAINED HEREIN IS THE EXCLUSIVE PROPERTY OF INTEL CORPORATION. THIS DRAWING IS LOANED TO CONFIDENCE AND ITS CONTENTS MAY NOT BE DISCLOSED WITHOUT THE WRITTEN PERMISSION OF INTEL CORPORATION.

ELECTRICAL SPECS:

1. INPUT: 100, 115, 220, 230 VAC ± 10%, 47-440 Hz.
2. OUTPUT:

2.1 +5VDC NOMINAL ADJUSTABLE ± 5% TO BE SET AT NOMINAL ± 1%
MAX LOAD: AT +5.0V, 3AMP.
LINE LOAD REGULATION COMBINED 1.0%
MAX RIPPLE: 40 MVPP. OR 10 MV RMS.
TRANSIENT RESPONSE: 50 μSEC MAX FOR A 50% LOAD CHANGE.
OVER-VOLTAGE PROTECTION: 5.8V TO 6.6V.
OVER-CURRENT FOLDBACK PROTECTION: 5% TO 50% OVERLOAD

2.2 -5 VDC NOMINAL ADJUSTABLE ± 5% TO BE SET AT NOMINAL ± 1%
MAX LOAD: AT -5.0V, 0.4 AMP
LINE LOAD REGULATION COMBINED 1.0%
MAX RIPPLE: 40 MV PP OR 10 MV RMS
TRANSIENT RESPONSE: 50 μSEC MAX FOR A 50% LOAD CHANGE.
SHORT CIRCUIT CURRENT SHALL NOT EXCEED 2.3 AMPS

2.3 +24 VDC NOMINAL ADJUSTABLE ± 5% TO BE SET AT NOMINAL ± 1%
MAX LOAD AT +24V, 2.5 AMPS.
LINE LOAD REGULATION COMBINED: 1.0%
MAX RIPPLE: 100 MVPP OR 25 MV RMS
OVER-CURRENT FOLDBACK PROTECTION: 5% TO 50% OVERLOAD
SEPARATE GROUND RETURN PROVIDED, CONNECTED TO ELECTRONIC GROUND AT ONE POINT.

3. A SINGLE GREEN WIRE WITH YELLOW STRIPE WILL CONNECT VS & F CONNECTOR FRAME GROUND TO CHASSIS.
4. ALL ELECTRONIC GROUNDS (+5V, -5V, +24V) SHALL BE COMMON AND ISOLATED FROM FRAME GROUND.
5. TEMPERATURE COEFFICIENT: ± .02% PER °C MAX.
6. OVER-VOLTAGE PROTECTION NEED NOT BE ADJUSTABLE.
7. LINE FILTER REQUIRED.
8. ENVIRONMENT:
AMBIENT TEMP. 0°C TO 65° C.
HUMIDITY: 90% WITH NO CONDENSATION.
9. LIFE EXPECTANCY: 10 YEARS.
10. THIS POWER SUPPLY TO PASS ELECTROSTATIC DISCHARGE TESTS PER INTEL SPECIFICATION 9400010 AT A LEVEL OF 15 KILOVOLTS.

ELECTRICAL SPECS (CONT.)

11. EFFICIENCY SHALL BE 30% OR GREATER AT FULL LOAD
12. VOLTAGE ADJUSTMENT POTENTIOMETERS SHALL BE ACCESSIBLE FROM THE TOP OF UNIT.
13. ALL MEASUREMENTS TO BE MADE AT THE END OF THE APPROPRIATE POWER CABLE CONNECTOR.

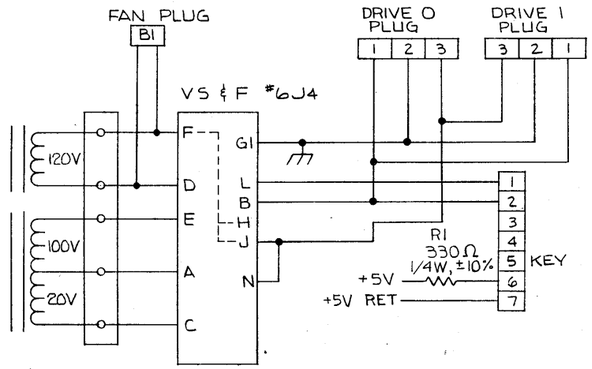

10. MULTIPLE PIECE CHASSIS CONSTRUCTION ACCEPTABLE.
9. MARK NOMENCLATURE AS SHOWN IN PERMANENT CONTRASTING INK
8. REMOVED
7. PROVIDE 2 AMP, NORMAL BLOW, FUSE, ITEM 11, IN VS & F CONN., ITEM 8.
6. ALL LARGE CAPACITORS MUST BE SECURELY FASTENED TO CHASSIS.
5. 100% BEARING SURFACE REQ'D BEHIND HARDWARE LOCKING DEVICES.
4. STRAIN RELIEF REQ'D ON ALL CABLES EXTENDING BEYOND ENVELOPE.
3. MARK VENDOR I.D. WITH CONTRASTING PERM. COLOR, APPROX. WHERE SHOWN.
2. MARK PART NO. AND REV LEVEL WITH CONTRASTING PERM COLOR, .12 HIGH, APPROX WHERE SHOWN.
1. PART NO. IS 4501498-02. SPEC CONTROL DRAWING AND LIST OF VENDORS ARE TRACKING DOCUMENTS.

NOTES: UNLESS OTHERWISE SPECIFIED;

17. MOUNT ITEM 13 ON PWB SUPPORT PLATE APPROX WHERE SHOWN.
16. INTERNAL AC WIRING FROM TRANSFORMER SECONDARY TO REGULATOR CARD SHALL BE SLEEVED.
15. PROVIDE INSULATING COVER OVER CONNECTOR J5 WITH THE FOLLOWING LABEL: WARNING HIGH VOLTAGE DO NOT TOUCH
14. ALL DIMENSIONS ARE IN INCHES.
13. WORKMANSHIP PER MCSD QAWS 99-0007-001.
12. REMOVE PIN 5, LOCATE AT APPROX POSITION SHOWN.
11. FINISH: ALODINE 1000, CLEAR.

intel 3065 BOWERS AVE. SANTA CLARA CALIF. 95051

TITLE: POWER SUPPLY MDS-71X/72X/73X

SIZE	DEPT	DRAWING NO.	REV
D	MCSD	L4501498	E

CODE: SHEET 1 OF 3

98-253A

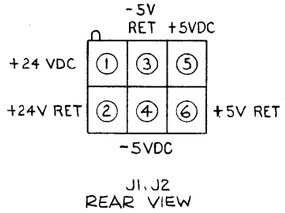

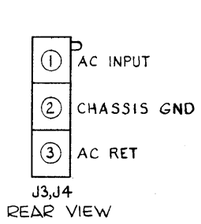

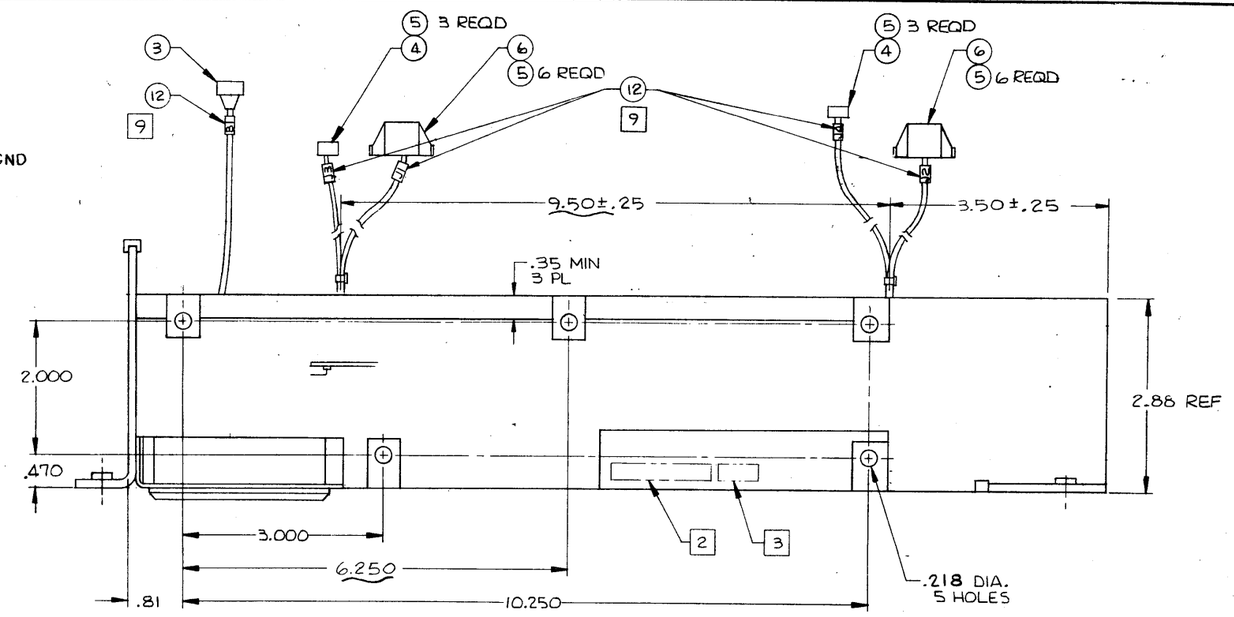

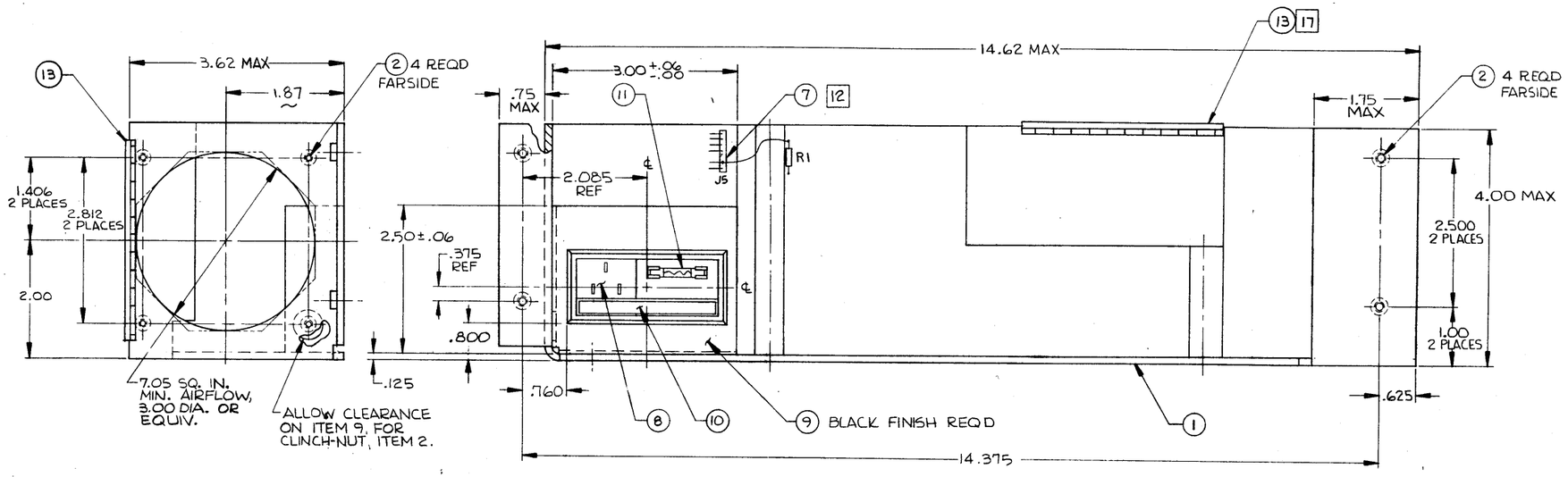

SCALE: 1/1	SIZE	DEPT	DRAWING NO.	REV
SHEET 2 OF	D	MCSD	L4501498	E

THIS DRAWING CONTAINS INFORMATION WHICH IS THE PROPRIETARY PROPERTY OF INTEL CORPORATION. THIS DRAWING IS RECEIVED IN CONFIDENCE AND ITS CONTENTS MAY NOT BE DISCLOSED WITHOUT THE PRIOR WRITTEN CONSENT OF INTEL CORPORATION.

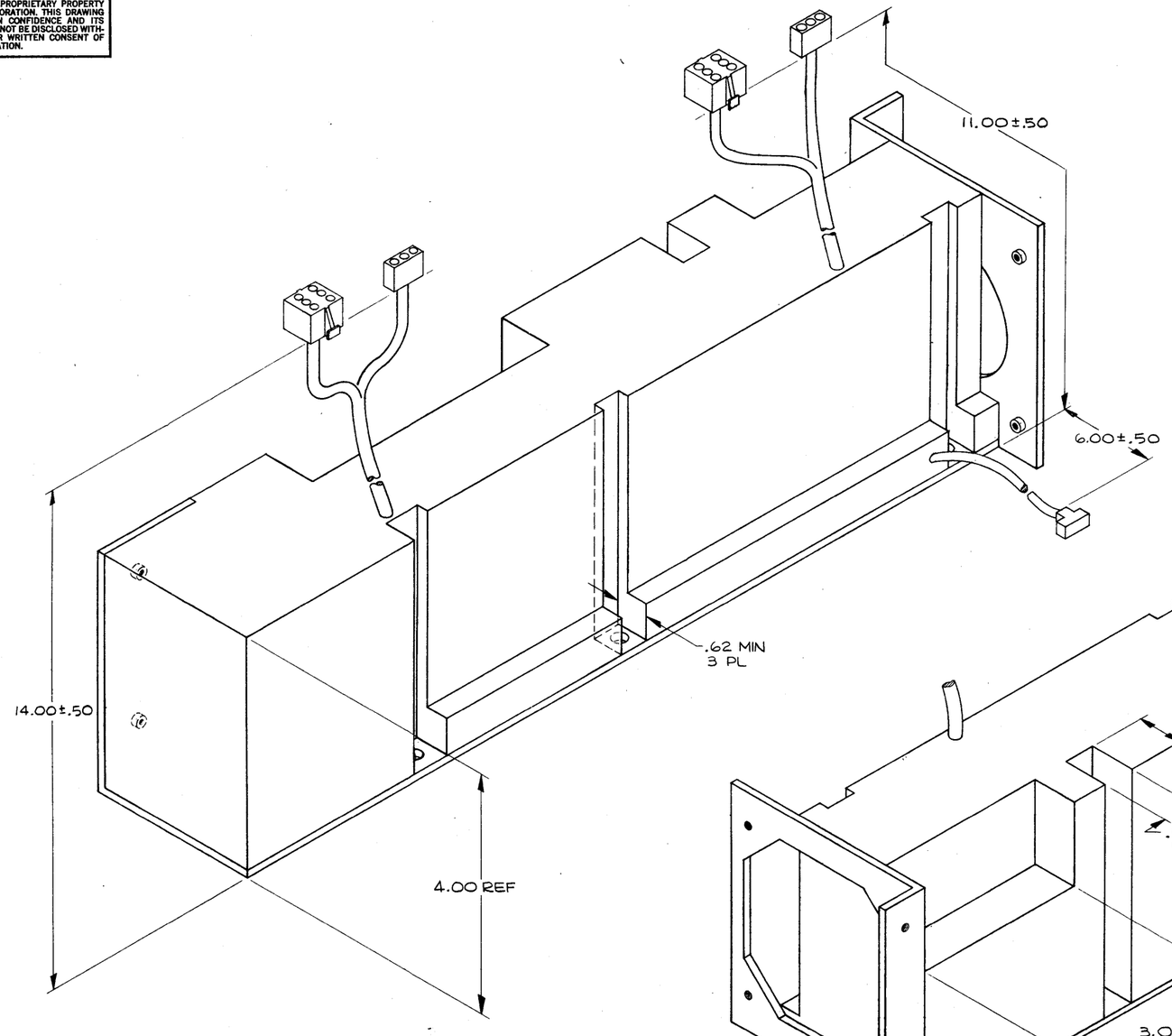

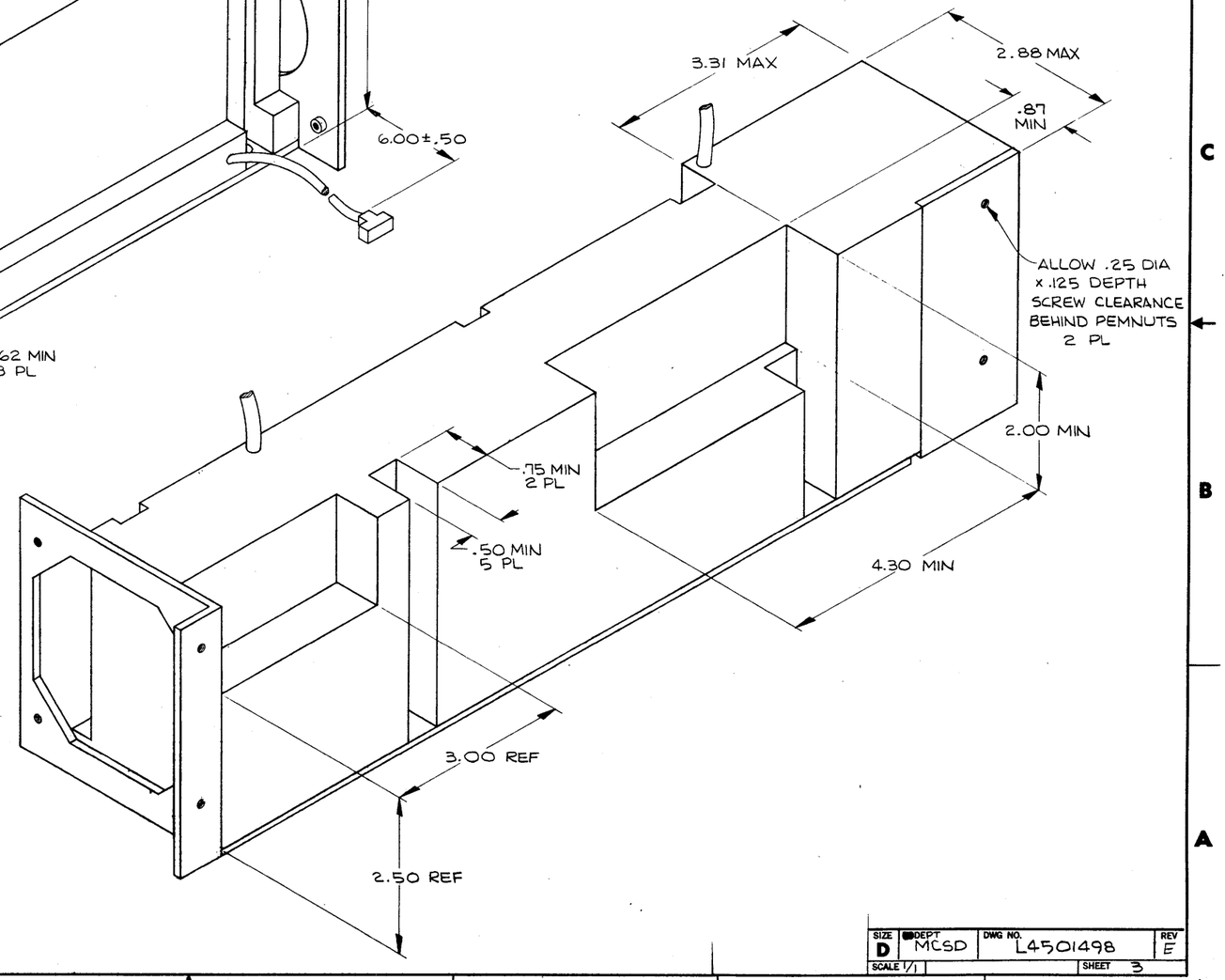

SIZE	DEPT	DWG NO.	REV
D	MCSD	L4501498	E
SCALE 1/1		SHEET 3	

9300022

THIS DRAWING CONTAINS INFORMATION WHICH IS THE PROPRIETARY PROPERTY OF INTEL CORPORATION. THIS DRAWING IS LOANED IN CONFIDENCE AND ITS CONTENTS MAY NOT BE DISCLOSED WITHOUT THE PRIOR WRITTEN CONSENT OF INTEL CORPORATION.

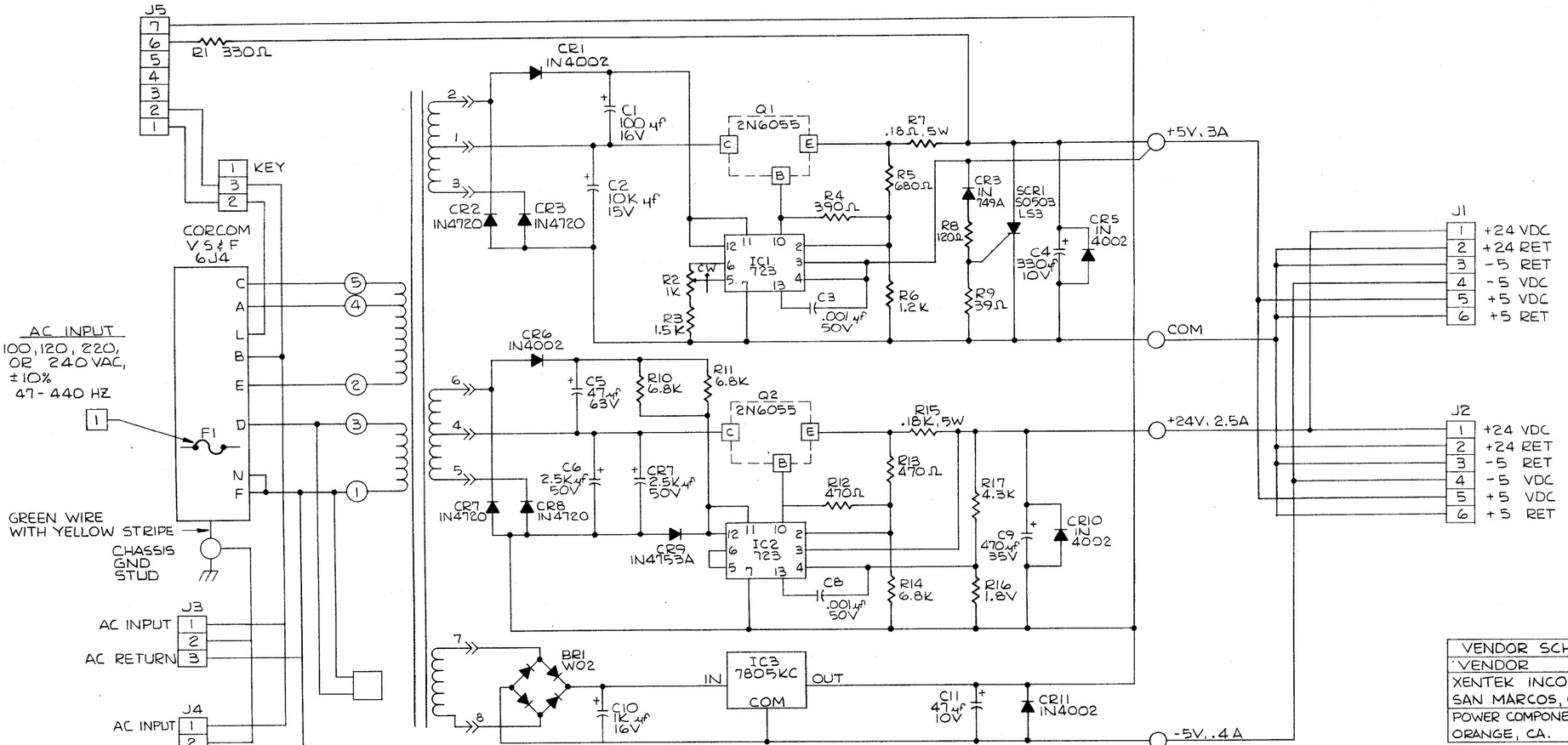

[1] F1 IS 2A FOR 100, & 120 OPERATION
F1 IS 1A FOR 220, & 240 OPERATION

NOTES: UNLESS OTHERWISE SPECIFIED;

VENDOR SCHEMATICS	
VENDOR	SHT. NO.
XENTEK INCORP. SAN MARCOS, CA.	1
POWER COMPONENTS CO. ORANGE, CA.	2, 3, & 4

VENDORS SCHEMATIC
XENTEK INCORP.
C2910-501

intel 3065 BOWERS AVE. SANTA CLARA CALIF. 95051

TITLE: PWR. SUPPLY SCHEMATIC MDS-7XX

SIZE	DEPT	DRAWING NO.	REV
D	MCSD	L2002677	A

CODE: SHEET 1 OF 4

98-253A

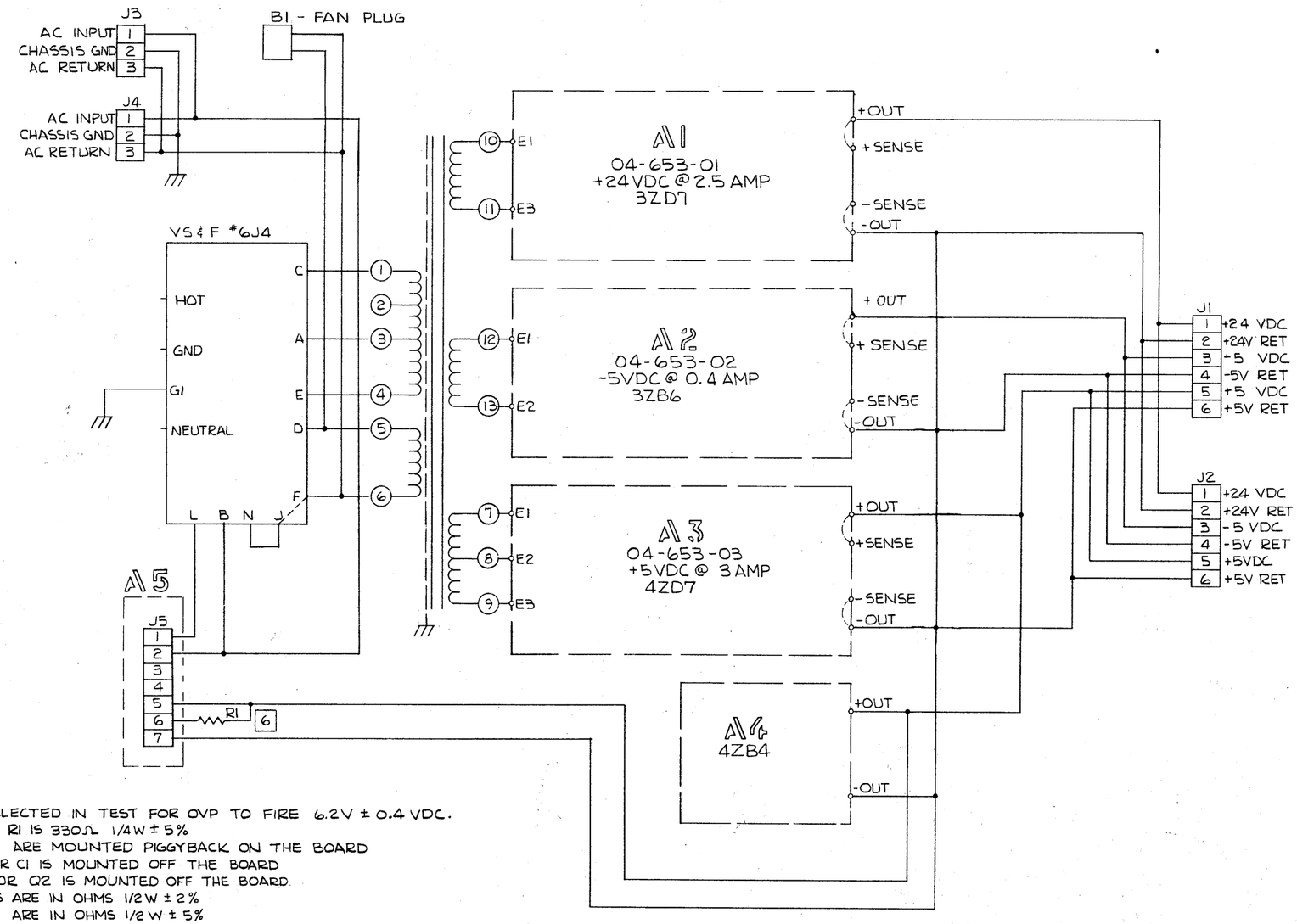

7 VALUE SELECTED IN TEST FOR OVP TO FIRE 6.2V ± 0.4 VDC.
6 RESISTOR R1 IS 330Ω 1/4W ± 5%
5 R4 & R4A ARE MOUNTED PIGGYBACK ON THE BOARD
4 CAPACITOR C1 IS MOUNTED OFF THE BOARD
3 TRANSISTOR Q2 IS MOUNTED OFF THE BOARD
2 RESISTORS ARE IN OHMS 1/2W ± 2%
1. RESISTORS ARE IN OHMS 1/2 W ± 5%
NOTES: UNLESS OTHERWISE SPECIFIED;

VENDORS SCHEMATIC
POWER COMPONENTS CO.
04-653-00

SCALE: —	SIZE	DEPT	DRAWING NO.	REV
SHEET 2 OF 4	D	MCSD	L2002677	A

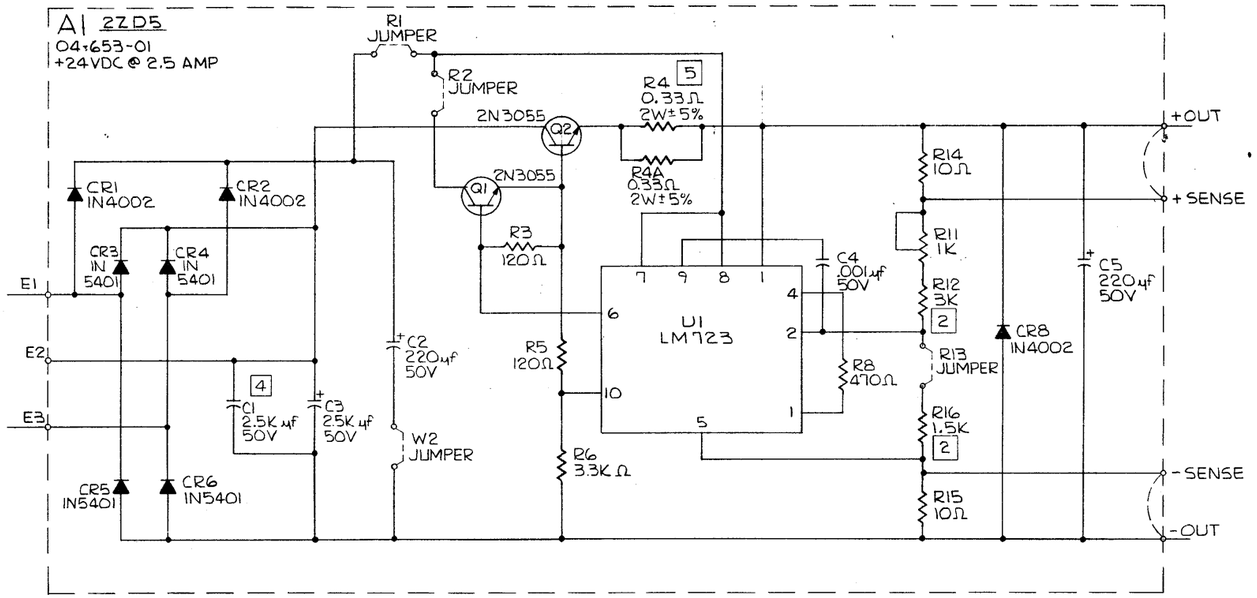

VENDORS SCHEMATIC
POWER COMPONENTS
04-653-00 REV A

SCALE: —	SIZE D	DEPT MCSD	DRAWING NO. L2002677	REV A
SHEET 3 OF 4				

© Intel Corporation 1977

THE INFORMATION CONTAINED HEREIN IS THE PROPRIETARY PROPERTY OF INTEL CORPORATION. THIS DRAWING IS RECEIVED IN CONFIDENCE AND ITS CONTENTS MAY NOT BE DISCLOSED WITH OUT THE PRIOR WRITTEN CONSENT OF INTEL CORPORATION.

A3 2ZB4
04-653-03
+5VDC @ 3AMP

R1 JUMPER
R2 JUMPER
3 2N3055 Q2
R4 0.1Ω 2W±5%
2N3055 Q1
R3 120Ω
C4 .001μf 50V
R14 10Ω
R11 1K
R12 1.5K
2
R13 JUMPER
R16 1.5K 2
R8 5.6K 2
R9 2.4K 2
U1 LM723
R5 120Ω
R6 910K
C2 IN4002
C2 IN4002
C2 220μf 50V
C3 75K μf 15V
W2 JUMPER
CR5 IN5401
CR6 IN5401
CR8 IN4002
C5 220μf 50V
R15 10Ω
E1
E2
E3
+OUT
+ SENSE
-OUT
-SENSE

A4 2ZB4
CR1 IN4734
R1 7
SCR1 2N4441
R2 100Ω
C1 20μf 15V
+OUT
-OUT
OVP-0-5

VENDORS SCHEMATIC
POWER COMPONENTS
04-653-00

SCALE: —	SIZE D	DEPT MCSD	DRAWING NO. L2002677	REV A
SHEET 4 OF 4				

THIS DRAWING CONTAINS INFORMATION WHICH IS THE PROPRIETARY PROPERTY OF INTEL CORPORATION. THIS DRAWING IS RECEIVED IN CONFIDENCE AND ITS CONTENTS MAY NOT BE DISCLOSED WITHOUT THE PRIOR WRITTEN CONSENT OF INTEL CORPORATION.

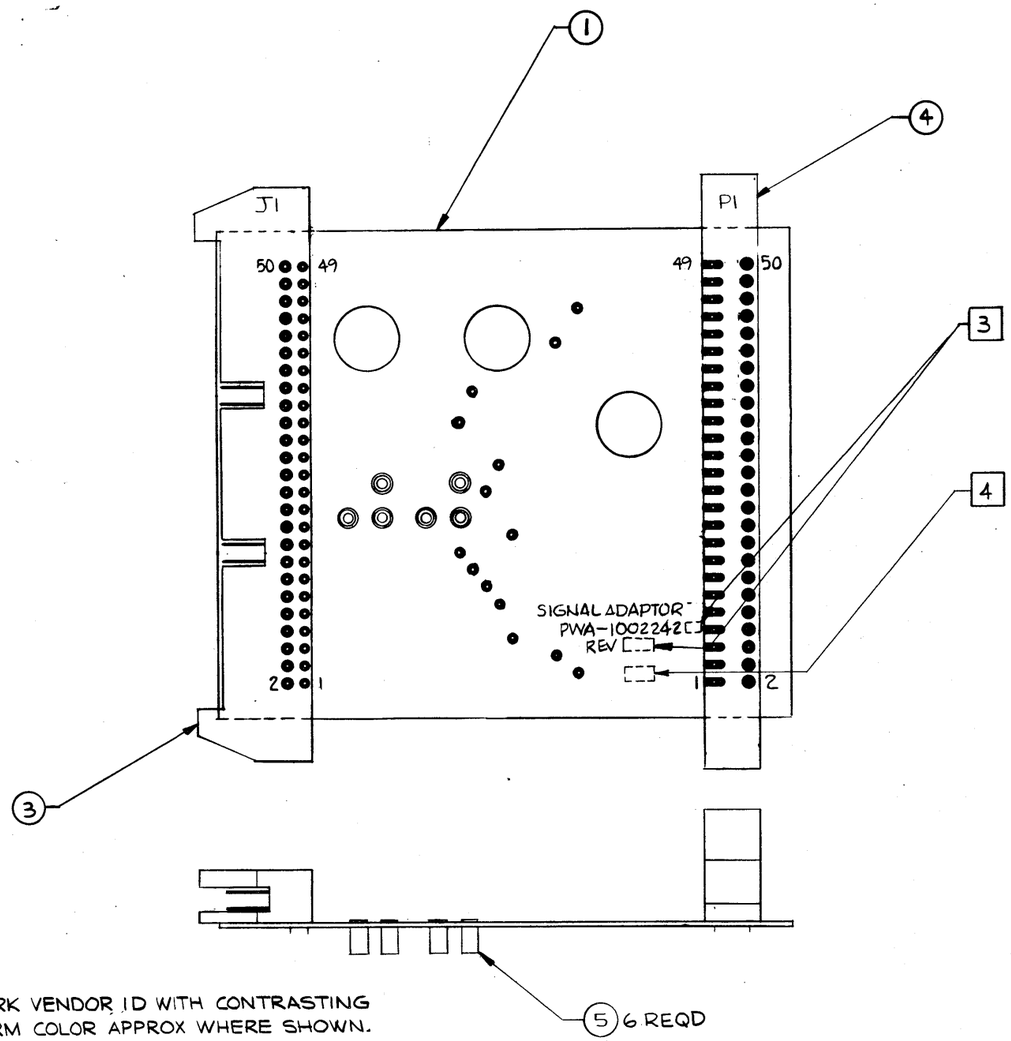

4 MARK VENDOR ID WITH CONTRASTING PERM COLOR APPROX WHERE SHOWN.

3. MARK PART NO & REV LEVEL WITH CONTRASTING PERM COLOR, .12 HIGH, APPROX WHERE SHOWN.

2. WORKMANSHIP PER MCSD QAWS 99-0007-001.

1. ASSY PART NO. IS 1002242-01. ASSY AND PL ARE TRACKING DOCUMENTS.

NOTES: UNLESS OTHERWISE SPECIFIED

intel
3065 BOWERS AVE.
SANTA CLARA
CALIF. 95051

PRINTED WIRING ASSEMBLY
SIGNAL ADAPTOR

SIZE	DEPT	DRAWING NO	REV
C	MCSD	L1002242	A

SHEET 1 OF 1

THIS DRAWING CONTAINS INFORMATION WHICH IS THE PROPRIETARY PROPERTY OF INTEL CORPORATION. THIS DRAWING IS RECEIVED IN CONFIDENCE AND ITS CONTENTS MAY NOT BE DISCLOSED WITHOUT THE PRIOR WRITTEN CONSENT OF INTEL CORPORATION.

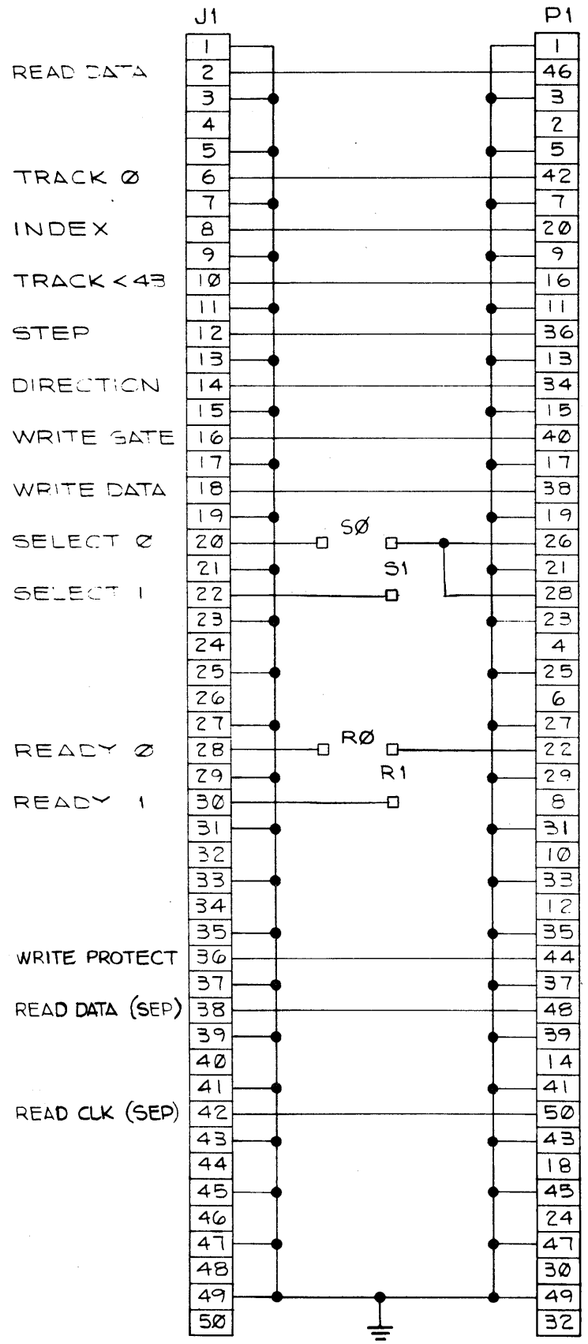

intel®	3065 BOWERS AVE. SANTA CLARA CALIF. 95051		
TITLE	SCHEMATIC SIGNAL ADAPTER		
SIZE C	CODE MCSD	DWG. NO. L2002244	REV A
SCALE NONE		SHEET 1 OF 1	

98-252A

THIS DRAWING CONTAINS INFORMATION WHICH IS THE PROPRIETARY PROPERTY OF INTEL CORPORATION. THIS DRAWING IS RECEIVED IN CONFIDENCE AND ITS CONTENTS MAY NOT BE DISCLOSED WITHOUT THE PRIOR WRITTEN CONSENT OF INTEL CORPORATION.

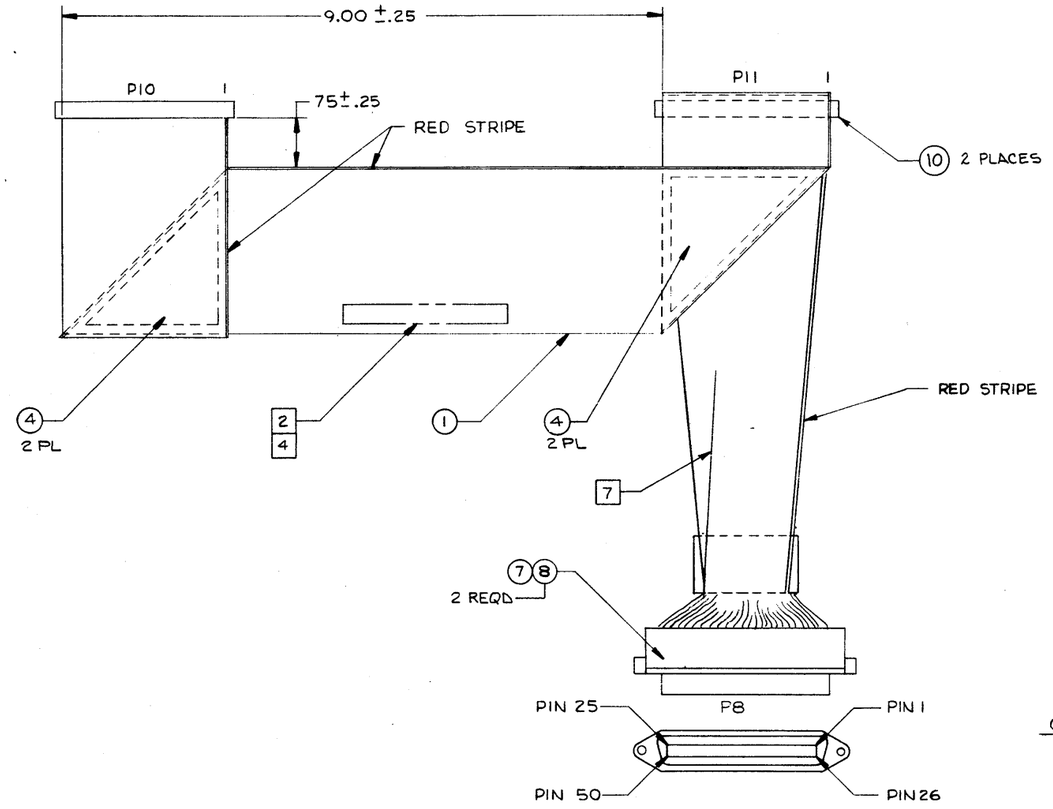

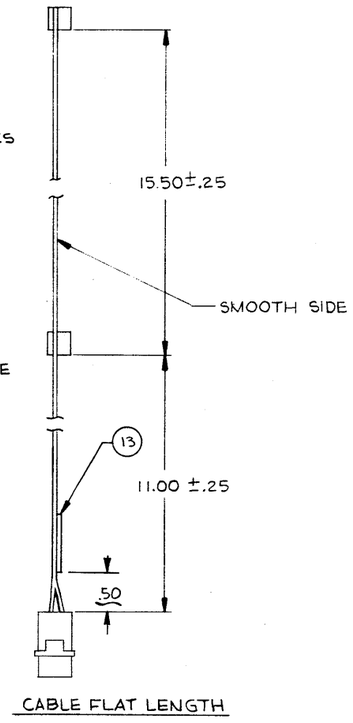

7 SPLIT CABLE BETWEEN WIRES 25 & 26 APPROX 8" UP CABLE FROM P8 END. SEPARATE EACH WIRE AND INSTALL IN ITEM 7. USE FULL QTY OF ITEM 13 & INSTALL AS SHOWN.

6. WORKMANSHIP PER MCSD QAWS 99-0007-001.

5 REMOVED

4 MARK ASSY VENDOR ID WITH CONTRASTING PERM COLOR, .12 HIGH, APPROX WHERE SHOWN.

3. REMOVED

2 MARK ASSY PART NO. & REV LEVEL WITH CONTRASTING PERM COLOR, .12 HIGH, APPROX WHERE SHOWN.

1. PART NO. IS 4001496-01. ASSY & PL ARE TRACKING DOCUMENTS.

NOTES: UNLESS OTHERWISE SPECIFIED

SEE SEPERATE PART LIST

intel® 3065 BOWERS AVE. SANTA CLARA CALIF. 95051

TITLE: DC SIGNAL CABLE FLOPPY DISK

SIZE	CODE	DWG. NO.	REV
D	MCSD	L4001496	D

SCALE 1:1 SHEET 1 OF 1

9300021

THIS DRAWING CONTAINS INFORMATION WHICH IS THE PROPRIETARY PROPERTY OF INTEL CORPORATION. THIS DRAWING IS RECEIVED IN CONFIDENCE AND ITS CONTENTS MAY NOT BE DISCLOSED WITHOUT THE PRIOR WRITTEN CONSENT OF INTEL CORPORATION.

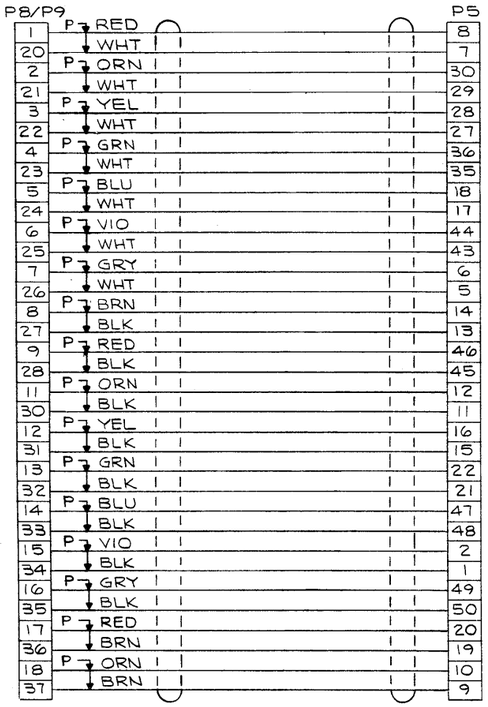

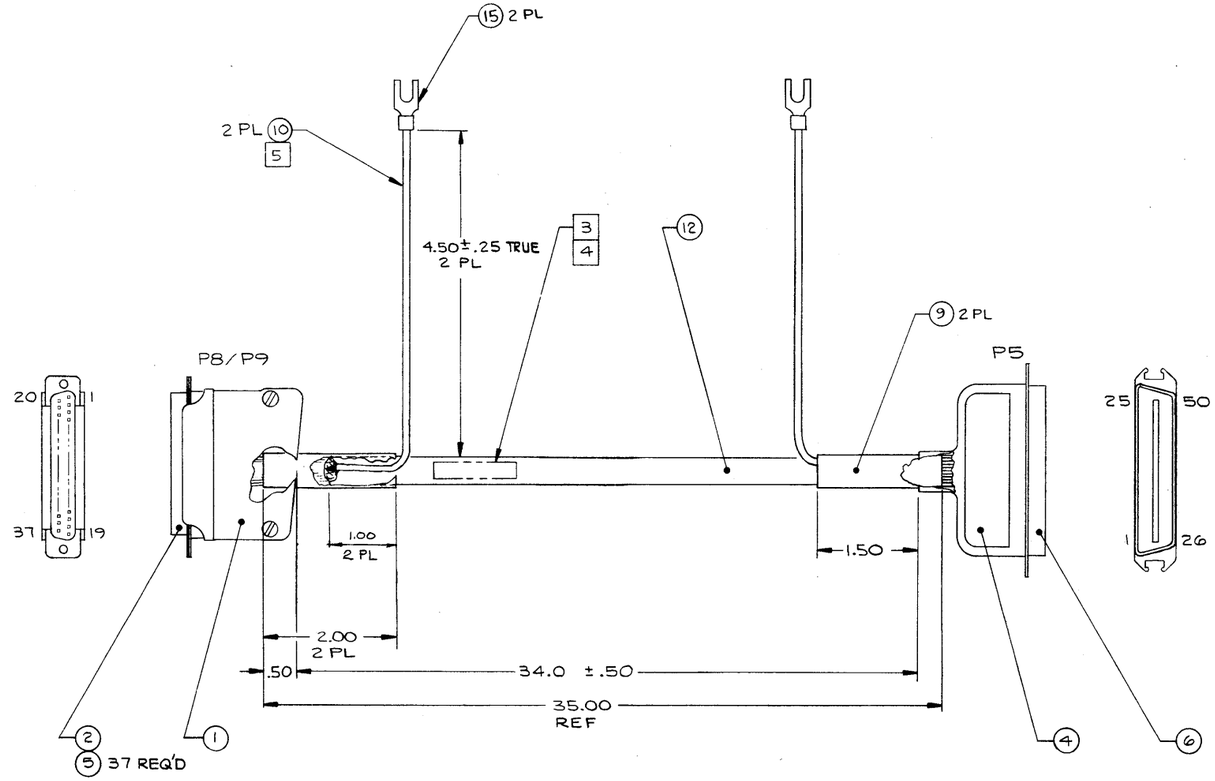

5. SHIELD OF CABLE TO BE ROLLED INTO SINGLE CONDUCTOR AND SLEEVED AS SHOWN.
4. MARK VENDOR ID WITH CONTRASTING PERM COLOR, APPROX WHERE SHOWN.
3. MARK PART NO. AND REV LEVEL WITH CONTRASTING PERM COLOR, .12 HIGH, APPROX WHERE SHOWN.
2. WORKMANSHIP PER MCSD QAWS 99-0007-001.
1. ASSY PART NO. IS 4002176-01.

NOTES: UNLESS OTHERWISE SPECIFIED

intel® 3065 BOWERS AVE. SANTA CLARA CALIF. 95051

TITLE: PERIPHERAL CABLE INTERCONNECT

SIZE	CODE	DWG. NO.	REV
D	MCSD	L4002176	A

SCALE NONE | SHEET 1 OF 1

9300021

THIS DRAWING CONTAINS INFORMATION WHICH IS THE PROPRIETARY PROPERTY OF INTEL CORPORATION. THIS DRAWING IS RECEIVED IN CONFIDENCE AND ITS CONTENTS MAY NOT BE DISCLOSED WITHOUT THE PRIOR WRITTEN CONSENT OF INTEL CORPORATION.

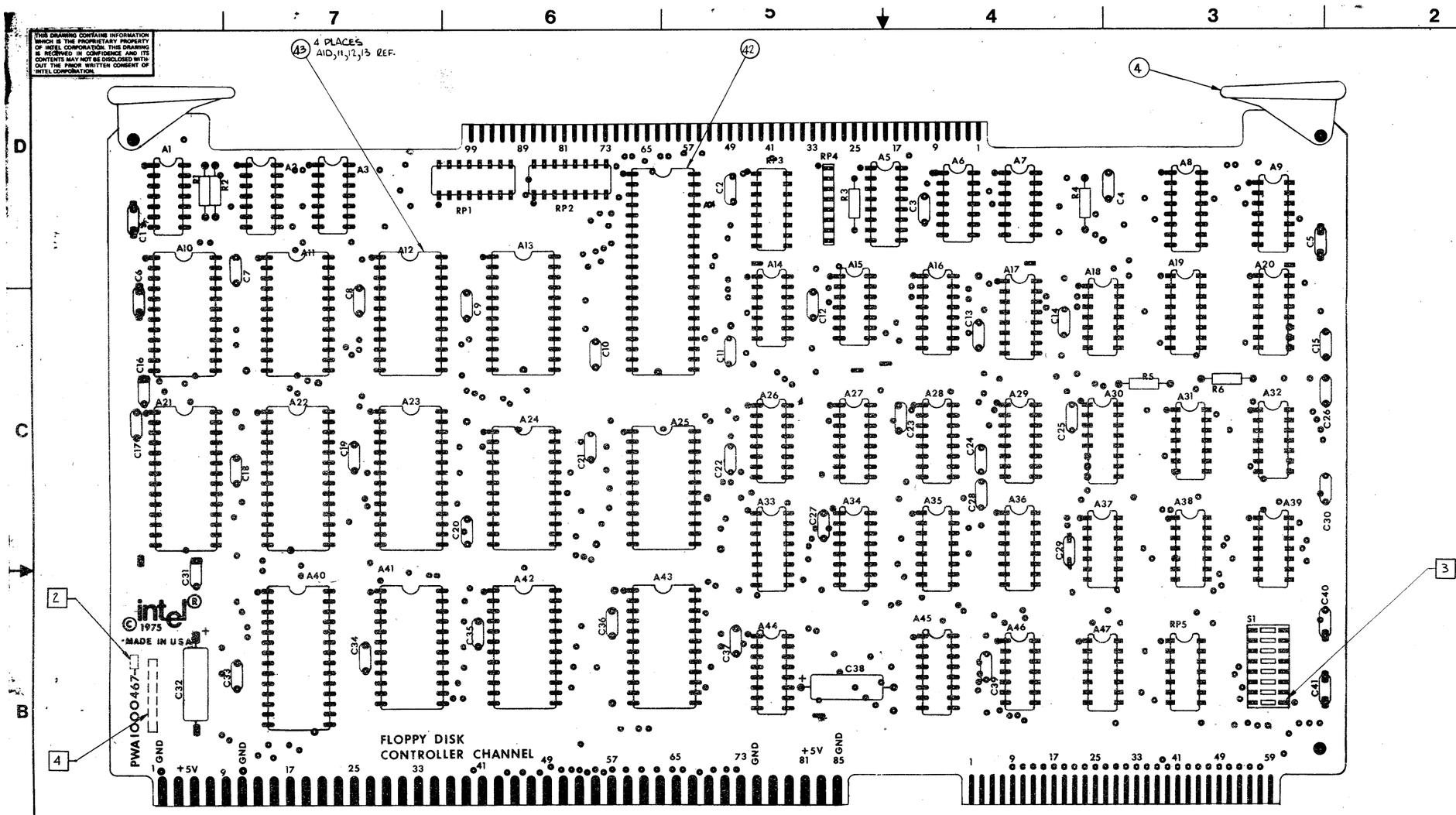

5. WORKMANSHIP PER MCSD QAWS 99—0007-001.

[4] MARK ASSY VENDOR ID WITH CONTRASTING PERM COLOR NON-CONDUCTIVE, .12 INCH HIGH, APPROX WHERE SHOWN.

[3] INSTALL SWITCH WITH SLIDE POSITION 1 TO BOTTOM OF BOARD.

[2] MARK ASSY DASH No AND REV LEVEL WITH CONTRASTING PERM COLOR, NON-CONDUCTIVE, .12 INCH HIGH APPROX WHERE SHOWN.

1. ASSY PART No IS 1000467-XX. ASSY AND PL ARE TRACKING DOCUMENTS.

NOTES UNLESS OTHERWISE SPECIFIED

intel® 3065 BOWERS AVE. SANTA CLARA CALIF 95051

PRINTED WIRING ASSEMBLY

FLOPPY DISK CONTROLLER CHANNEL

SIZE	DEPT	DRAWING NO	REV
D	MCSD	P1000467	N

CODE | SHEET 1 OF 1

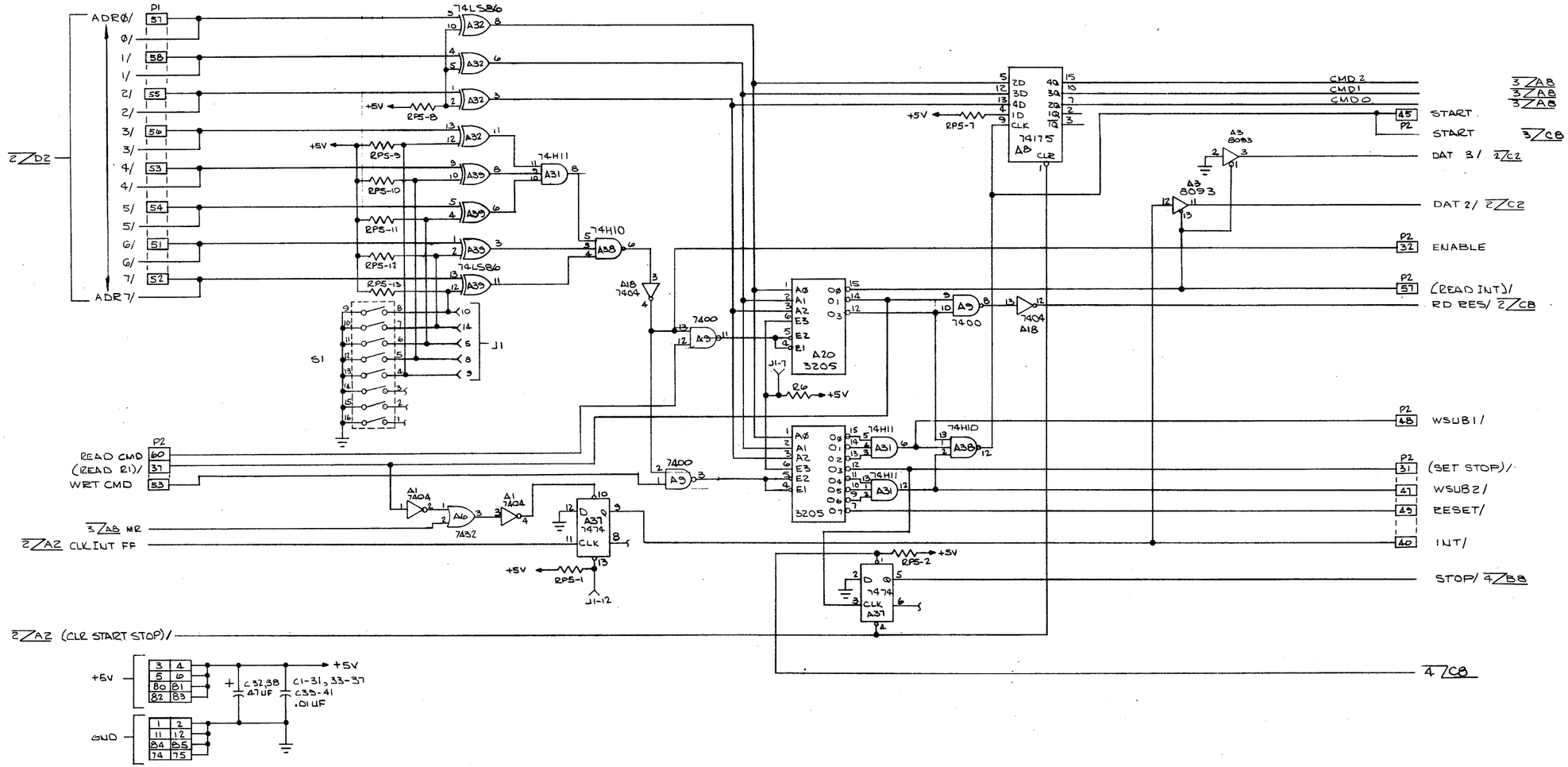

NOTES: UNLESS OTHERWISE SPECIFIED.

1. THIS DOCUMENT REFLECTS ARTWORK NO. 1000468, REV 'F'.
2. RESISTOR VALUES ARE IN OHMS 1K, ¼W, 5%.
3. CONNECTOR J1 IS USED FOR TEST POINT ONLY.

intel © INTEL 1976	3065 BOWERS AVE. SANTA CLARA CALIF. 95051		
TITLE: SCHEMATIC FLOPPY DISK CONTROLLER CHANNEL			
SIZE: D	DEPT: MCD	DRAWING NO.: P2000469	REV: G
CODE:	SHEET 1 OF 4		

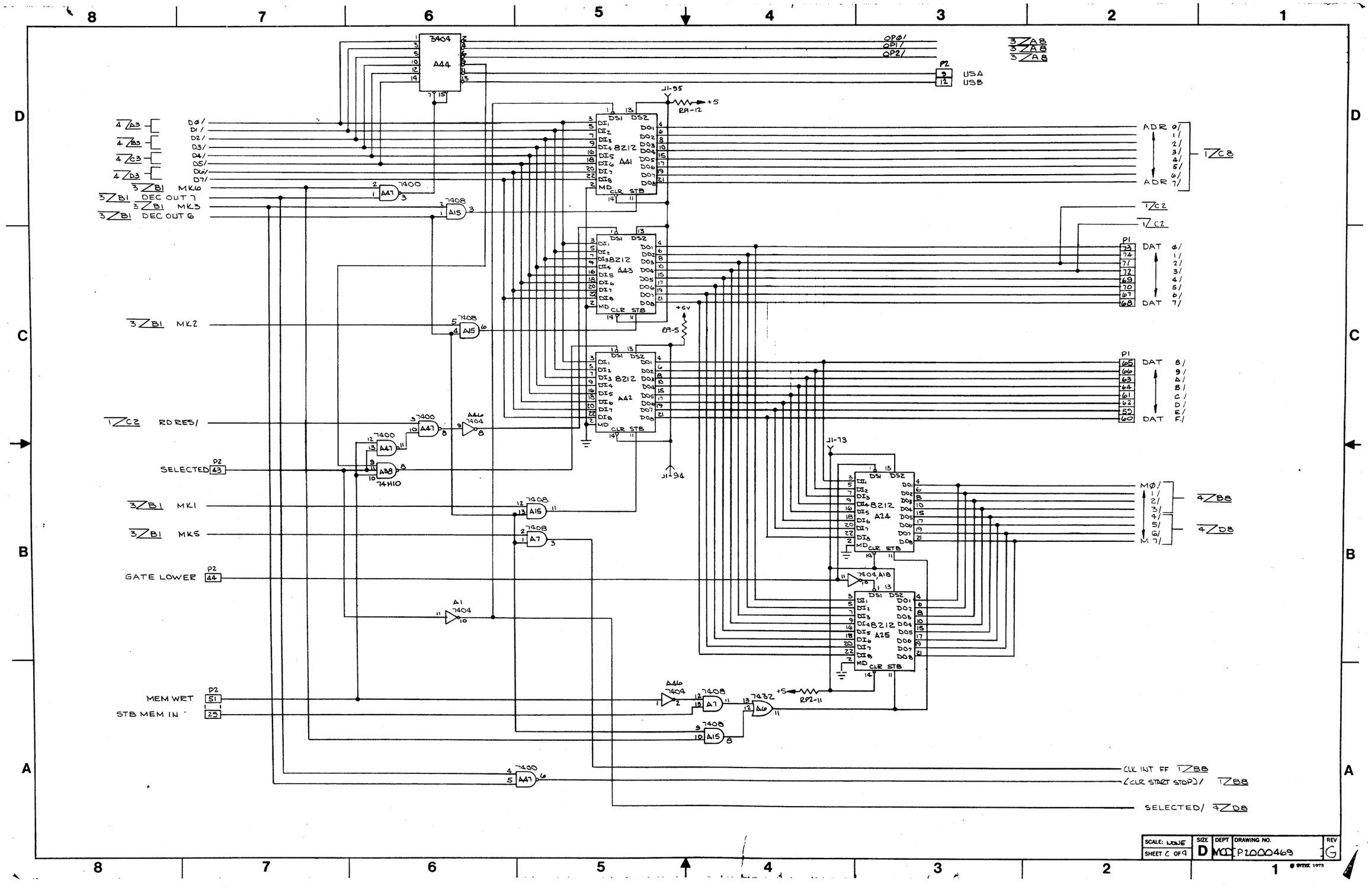

3404
A44
OP0/
OP1/
OP2/
USA
USB
8212
A41
A43
A42
A24
A25
ADR
DAT
MK6
DEC OUT 7
MK3
DEC OUT 6
MK2
RD RES/
SELECTED
MK1
MK5
GATE LOWER
MEM WRT
STB MEM IN
CLK INT FF
(CLR START STOP)/
SELECTED/
SCALE: NONE
SHEET 2 OF 9
SIZE D
DEPT MCD
DRAWING NO. P2000469
REV G

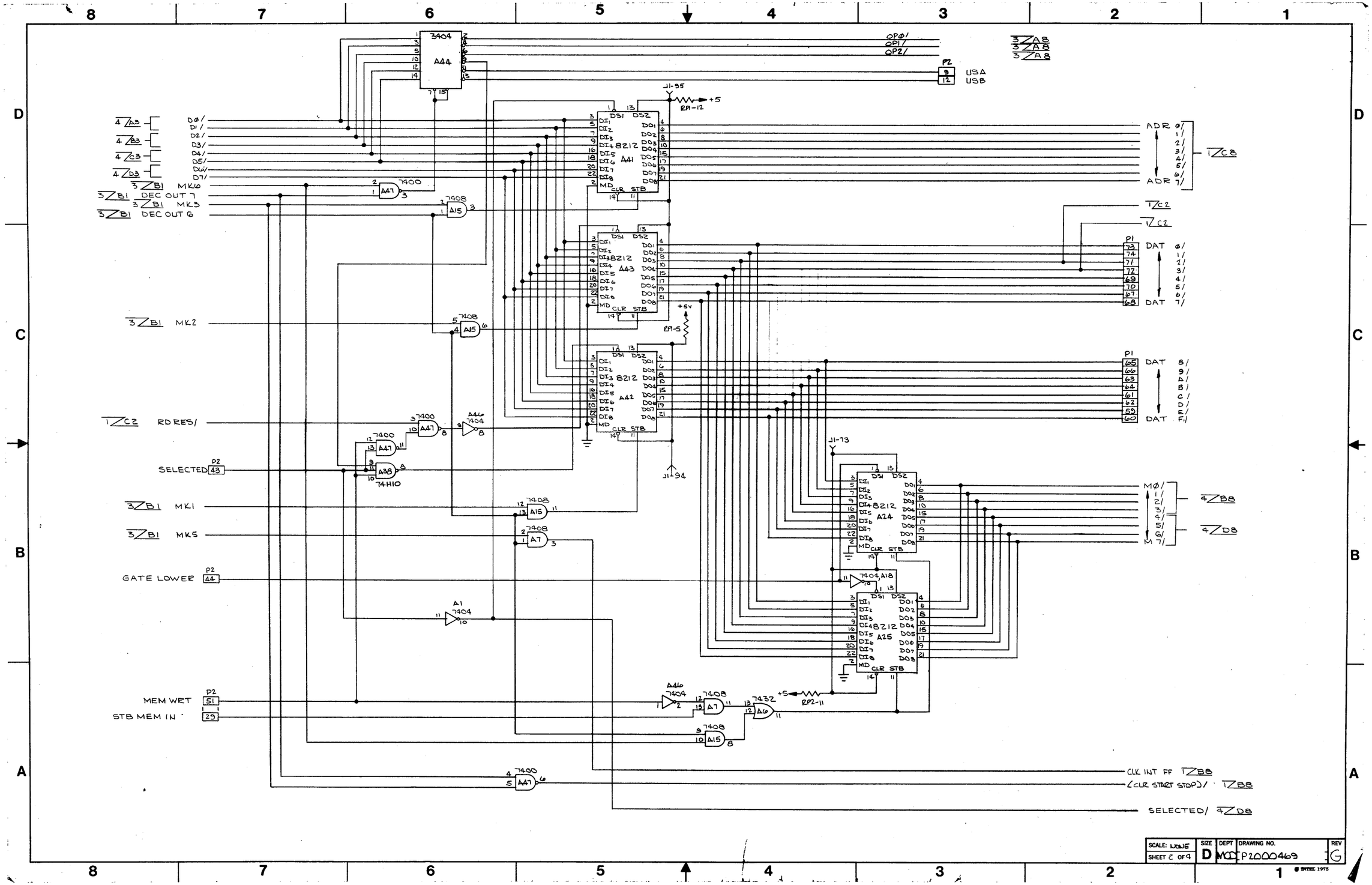

3404
A44
OP0/
OP1/
OP2/
P2
USA
USB
J1-95
RP1-12
+5
8212
A41
A43
A42
A24
A25
ADR
DAT
MK6
DEC OUT 7
MK3
DEC OUT 6
MK2
RD RES/
SELECTED
MK1
MK5
GATE LOWER
MEM WRT
STB MEM IN
7400
7408
7404
7432
74H10
RP1-5
RP2-11
J1-94
J1-73
CLK INT FF
(CLR START STOP)/
SELECTED/
SCALE: NONE
SHEET 2 OF 4
SIZE
D
DEPT
MCD
DRAWING NO.
P2000469
REV
G

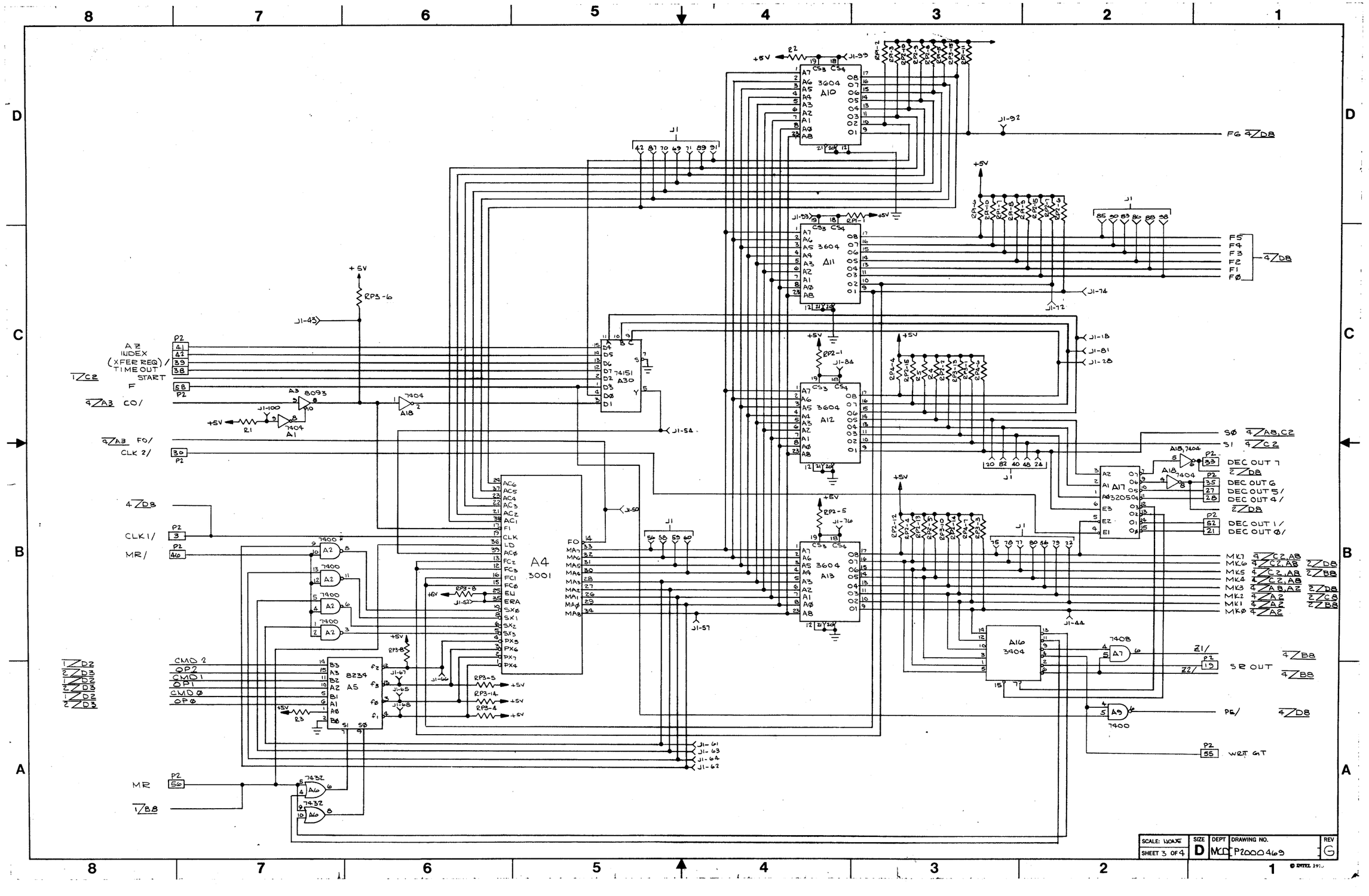
A10 3604
A11 3604
A12 3604
A13 3604
A4 3001
A5 8234
A30 74151
A1 7404
A18 7404
A3 8093
A16 3904
A17 32050
A7 7408
A9 7900
A2 7900
A16 7432
+5V
RP3-6
RP2-1
RP2-2
RP2-3
RP2-4
RP2-5
RP2-6
RP2-7
RP2-8
RP2-9
RP2-10
RP2-11
RP2-12
RP3-8
RP3-5
RP3-4
R1
R2
R3
J1-43
J1-54
J1-50
J1-57
J1-92
J1-93
J1-74
J1-72
J1-84
J1-18
J1-81
J1-28
J1-76
J1-44
J1-67
J1-65
J1-68
J1-66
J1-61
J1-63
J1-64
J1-62
FG 4/D8
F5 F4 F3 F2 F1 F0
4/D8
S0 4/A8,C2
S1 4/C2
DEC OUT 7
2/D8
DEC OUT 6
DEC OUT 5/
DEC OUT 4/
2/D8
DEC OUT 1/
DEC OUT 0/
MK7 4/C2,A8
MK6 4/C2,A8
MK5 4/C2,A8
MK4 4/C2,A8
MK3 4/A8,A2
MK2 4/A2
MK1 4/A2
MK0 4/A2
2/D8
2/B8
2/C8
2/B8
Z1/
Z2/
SR OUT
4/B8
4/B8
PE/
4/D8
WRT GT
A7 INDEX
(XFER REQ)/
TIME OUT
START
1/C2
F
4/A3 CO/
4/A3 F0/
CLK 2/
4/D8
CLK 1/
MR/
MR
1/B8
CMD 2
OP2
CMD 1
OP1
CMD 0
OP0
1/D2
2/D3
1/D2
2/D3
1/D2
2/D3
FO
MA7
MA6
MA5
MA4
MA3
MA2
MA1
MA0
MA8
AC6
AC5
AC4
AC3
AC2
AC1
FC2
FC3
FC1
FC0
EU
ERA
SX0
SX1
SX2
SX3
PX5
PX6
PX7
PX4
CLK
LD
AC0
P2
J1
SCALE: NONE
SHEET 3 OF 4
SIZE D
DEPT MCD
DRAWING NO. P2000469
REV G

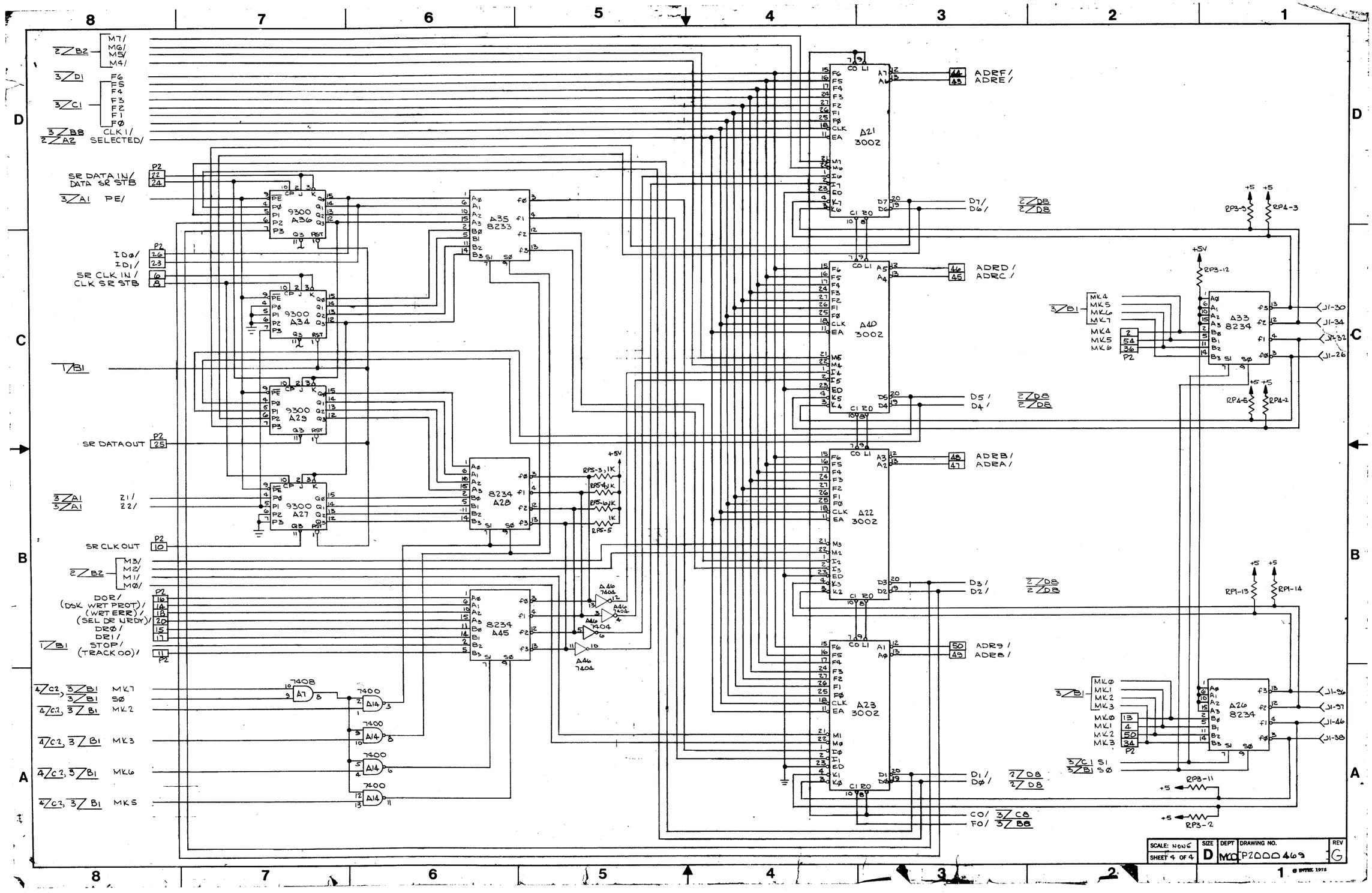

SR DATA IN/
DATA SR STB
PE/
ID0/
ID1/
SR CLK IN/
CLK SR STB
SR DATA OUT
Z1/
Z2/
SR CLK OUT
DOR/
(DSK WRT PROT)/
(WRT ERR)/
(SEL DR NRDY)/
DR0/
DR1/
STOP/
(TRACK 00)/
MK7
S0
MK2
MK3
MK6
MK5
9300 A36
9300 A34
9300 A29
9300 A27
8233 A35
8234 A28
8234 A45
7408 A7
7400 A14
A21 3002
A40 3002
A22 3002
A23 3002
A33 8234
A26 8234
ADRF/
ADRE/
ADRD/
ADRC/
ADRB/
ADRA/
ADR9/
ADR8/
D7/
D6/
D5/
D4/
D3/
D2/
D1/
D0/
CO/
FO/
RP3-9
RP4-3
RP3-12
RP4-5
RP4-2
RP1-13
RP1-14
RP3-11
RP3-2
J1-30
J1-34
J1-32
J1-26
J1-96
J1-97
J1-46
J1-38
SCALE: NONE
SHEET 4 OF 4
SIZE D
DEPT MCO
DRAWING NO. P2000469
REV G

INTEL CORPORATION, 3065 Bowers Avenue, Santa Clara, California 95051 • (408) 987-8080

Printed in U.S.A. NCG