Comparing the Hodgkin Huxley and Traub Neuron Model in MATLAB

By Emma Waddell and Itai Beaudoin de Roca.
Intro to Computer Simulation
Fall 2020

Introduction

The neuron is a complex cell that is composed of dendrites and an axon which is the driving component in the functionality of a brain. The cell membrane acts as a capacitor and also contains ion channels that allows for the passage of current. Hodgkin and Huxley performed experiments on a squid giant axon and experimentally fitted equations for three ion channels, namely a sodium channel, a potassium channel, and a leakage channel. Each channel has a voltage dependent resistance, which changes if the ion channel is open or closed. Additionally, the difference in ion concentration between the cell can be thought of as a battery for each ion channel. Thus, the membrane can be represented by the following circuit:

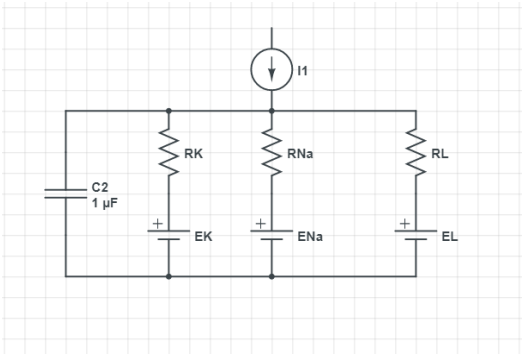

The neuron behaves in such a way that if a strong enough current is applied, there will be a voltage spike followed by a refractory period when the voltage is below equilibrium. This phenomenon is known as an action potential, and is the basis of the computational power of the brain. However, a characteristic component of the action potential is its ‘all-or-nothing’ quality, that is, no matter the strength of the applied current, the voltage spike will always be of the same amplitude. So, in order for a neuron to encode the strength of a stimulus, it will fire action potentials at a higher rate depending on the strength of the stimulus. In this project we will explore this dependency by applying a sustained stimulus at various currents and analyze the

resultant frequencies. We intend to use parameters fitted by Hodgkin and Huxley, and compare them to parameters and initializations by Traub.

Equations

Referring to the previous figure, we see that an applied current can be split up into a capacitive current and current through the channels. This is modeled by:

$$I(t) = I_C(t) + \sum_k I_k(t)$$

Then using the law of capacitance and rearranging, we get:

$$C\frac{\mathrm{d}u}{\mathrm{d}t} = -\sum_k I_k(t) + I(t)$$

The results of Hodgkin and Huxley's experiments led to the determination of gating variables *m, n, h,* which dictate the resistivity of the ion channels. The variables *m, h,* affect the sodium channel, and the variable *n,* affects the potassium channel in the following way:

$$\sum_k I_k = g_{\mathrm{Na}}\, m^3 h\,(v - E_{\mathrm{Na}}) + g_{\mathrm{K}}\, n^4\,(v - E_{\mathrm{K}}) + g_L\,(v - E_L)$$

Where *g* refers to the maximum conductivity of a respective channel, and *E* refers to the voltage of the respective battery. Note that conductivity (the reciprocal of resistivity) is being used here since the circuit is in parallel, so the conductances add.

The gating variable *m, n, h,* change with respect to time according to the following form:

$$\dot{s} = \alpha_s(u)\,(1 - s) - \beta_s(u)\,s$$

The functions Alpha and Beta are transition rate functions that describe the voltage dependent dynamics of the opening and closing of ion channels. The following were determined experimentally by Hodgking and Huxley:

$$
\begin{aligned}
\alpha_{\mathrm{m}}(v) &= 1.0\frac{(v+45)/10}{1-\exp\left(-(v+45)/10\right)}, \\
\beta_{\mathrm{m}}(v) &= 4.0\exp\left(-(v+70)/18\right), \\
\alpha_{\mathrm{h}}(v) &= 0.07\exp\left(-(v+70)/20\right), \\
\beta_{\mathrm{h}}(v) &= 1.0\frac{1}{1+\exp\left(-(v+40)/10\right)}, \\
\alpha_{\mathrm{n}}(v) &= 0.1\frac{(v+60)/10}{1-\exp\left(-(v+60)/10\right)}, \\
\beta_{\mathrm{n}}(v) &= 0.125\exp\left(-\frac{v+70}{80}\right).
\end{aligned}
$$

Different equations for Alpha and Beta as well as different initializations for *g, E* are used in the model for the Traub neuron.

Numerical Method

In order to solve for voltage, we need to solve for each gating variable at every time step. But in order to solve for the gating variables, we need to know the voltage at that time. To remedy this, we use a modified backwards Euler's method as follows:

$$\frac{s(t)-s(t-\Delta t)}{\Delta t} = \alpha_s\left(v(t-\Delta t)\right)\left(1-s(t)\right) - \beta_s\left(v(t-\Delta t)\right)s(t)$$

. Here we use $v(t-\Delta t)$ because this is a value that we know. Now by solving for *s(t)*, we can plug in that value to determine the conductivity of each channel at every time step. Now, using the backwards Euler Method, we can solve for voltage from the following:

$$C\frac{v(t)-v(t-\Delta t)}{\Delta t} = -\sum_k I_k(t) + I_0(t)$$

.

We solve for *v(t),* since we know the applied current, the capacitance (uF/cm^2), and the channel current which is determined by the gating variables.

Code

For our code, we needed to check when the voltage passed a certain threshold to count how many action potentials occurred. We had a counter that was incremented each time v was larger than 0. We also used a “flip” variable which was essentially a boolean

variable. If v > 0 flip would be set to 1, and when v went back below 0 it would be set back to 0. That way each action potential was only counted once instead of the counter continually incrementing for the length of the action potential. We then used a nested for loop, where the outermost loop went from 0 to 1 so we could test the program for kind = 0 (Hodgkin Huxley) and kind = 1 (Traub) and plot them side by side. Our inner loop went from 5 to 100 muA, and represented ip so we could plot the action potential frequencies for the various currents. We then plotted ip on the x axis, and action potential frequency per second on the y axis. The frequency is per second because we went from time = 0 to time = 1000.

Results and Discussion

The first plot represents our initial experiment. We tested the Hodgkin Huxley model against the Traub model, and both went from 1 muA to 100 muA with a capacitance of 1.0.

muA 0 → 100, Hodgkin-Huxley (top) and Traub neuron (bottom), Capacitance = 1.0

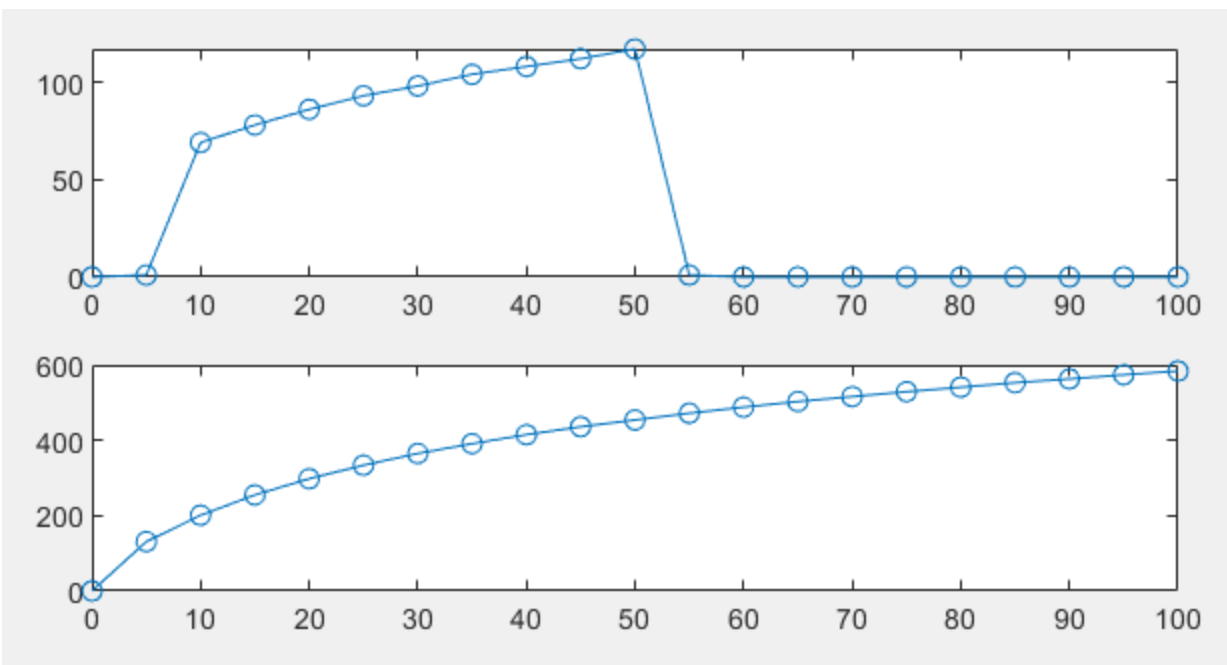

This graph shows a clear difference between the two models. The Hodgkin Huxley has a frequency of 0 action potentials for 0 muA and 5 muA. At 10 muA, it has a frequency of about 70. It then has a steady increase in frequencies up to 50 muA, but at 55 muA it drops back down to 0. Below 10 and above 50, the current is either too low or too high for the neuron to react and generate action potentials. Conversely, the Traub

neuron is able to consistently generate action potentials. There is a frequency of 0 when the current is 0, which makes sense. But at 5 muA to 100 muA there is a steady increase in action potential frequencies, with no range of current that is too low or too high. The cut off is around 230 muA, at which point the current will be too high for the Traub model to generate action potentials. Clearly the dynamic range is significantly larger for the Traub neuron than in the Hodgkin Huxley model.

HH and Traub Neuron. Capacitance = 3.0

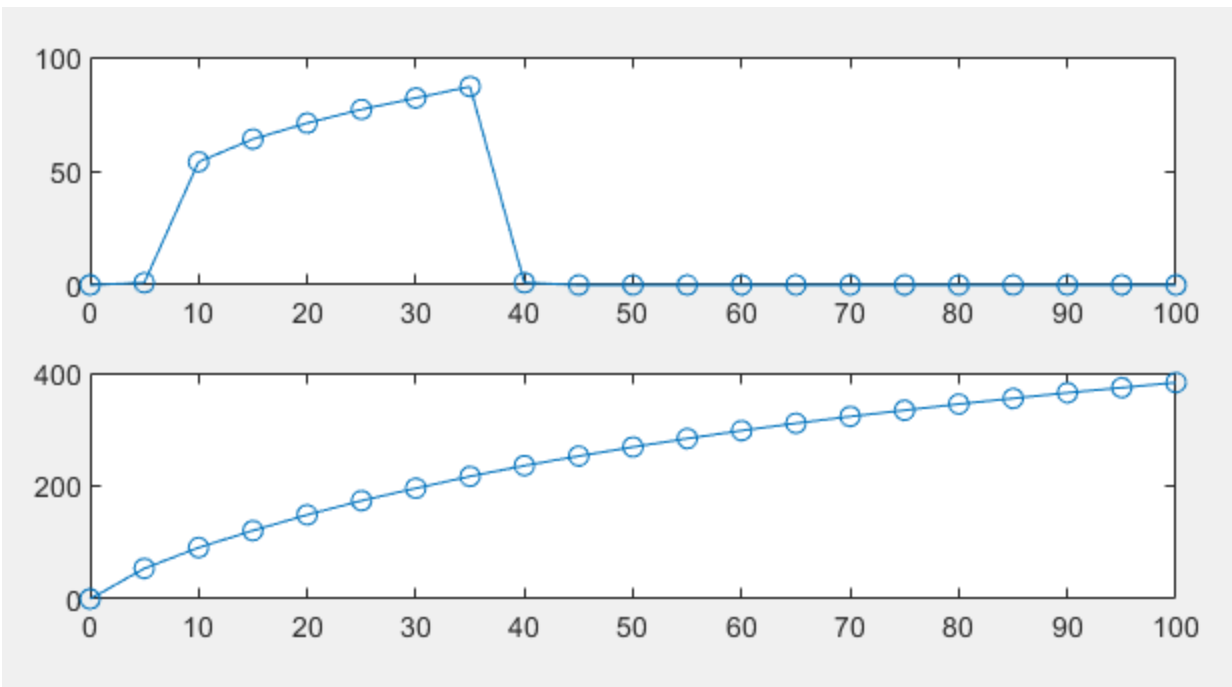

We then ran the simulation again, but raised the capacitance per unit area to 3.0. You can see that raising the capacitance lowers the frequency of action potentials. The important thing to note is that the dynamic range, or the range in which the Hodgkin Huxley model is able to produce action potential frequencies, become even smaller. Now any current less than 10 muA or higher than 35 muA is outside the range in which the Hodgkin Huxley will react. However, the Traub neuron is able to still consistently produce action potentials with this higher capacitance.

HH and Traub Neuron. Capacitance = 5.0

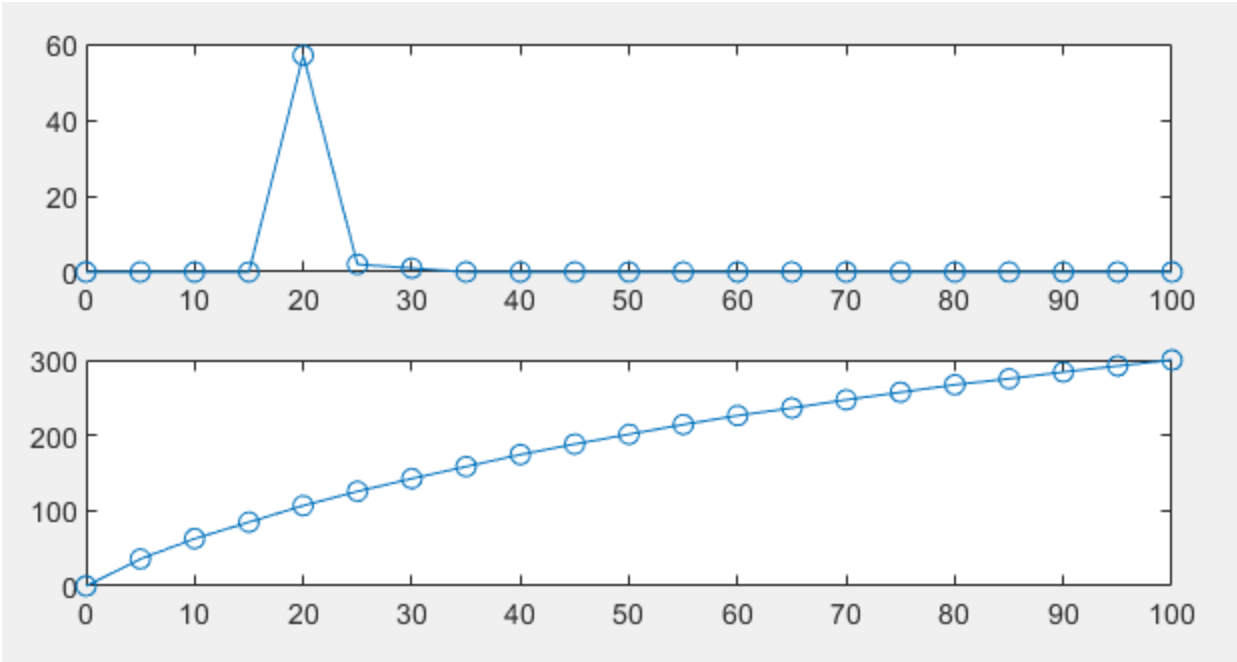

We then raised the capacitance again, to 5.0. This further shows the difference in dynamic ranges. The Hodgkin Huxley model here only reacts at 20 muA, and any other current is outside its range. However, the Traub neuron continues to consistently be able to react to a wide range of currents.

HH and Traub Neuron. Capacitance = 0.5

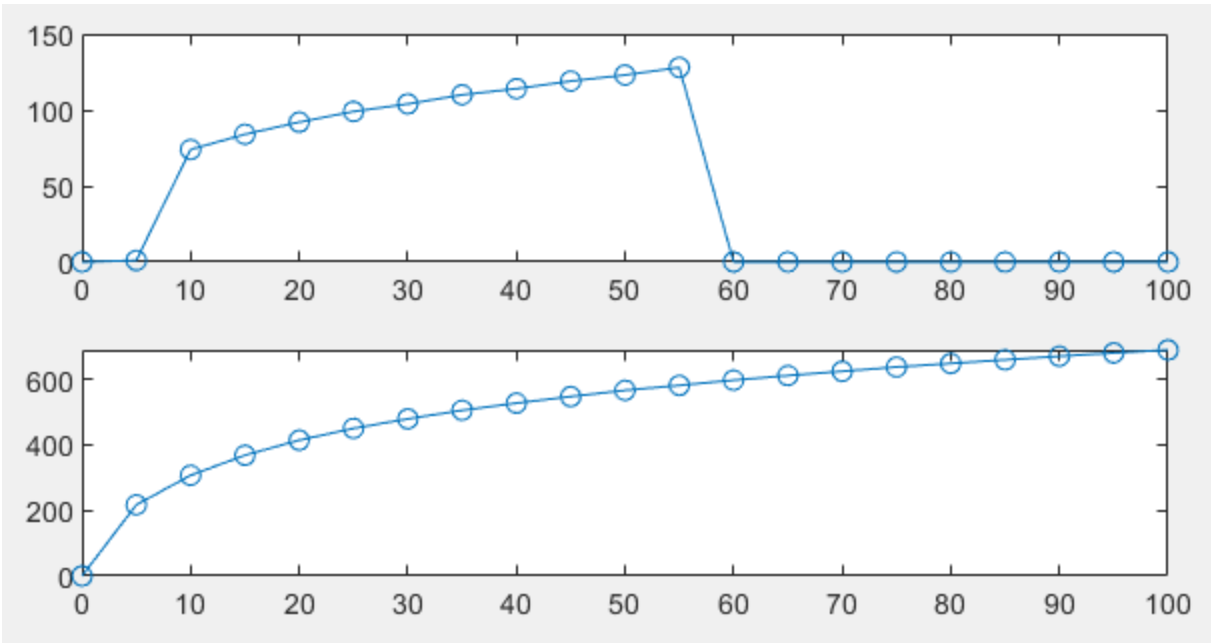

Finally, we went in the other direction and lowered the capacitance to 0.5. Here you can see the frequency increases instead of decreases as the capacitance goes down. In the first model, the Traub at 5 muA had a frequency of less than 200 action potentials per second, and here it is more than 200. The Hodgkin Huxley range is slightly larger than at capacitance 1.0, since it reacted to 10 → 55 muA, and at capacitance 1.0 it reacted to 10 → 50 muA. However, it is still a significantly smaller range than the Traub neuron.

In general, the Traub neuron had a much higher dynamic range than the Hodgkin Huxley neuron, as it was able to produce frequencies from 276 action potentials a second to 669 per second at capacitance 1.0, while the Hodgkin-Huxley produced from 74 to 128 action potentials a second. The book chapter on this subject explains that the constant stimulation we applied from 0 to 1000 milliseconds is most similar to the stimulation of sensory neurons. Sensory signals are detected by transducers, like rods and cones in the eye, hair cells in the ear, Pacinian Corpuscle in the skin, or taste buds. The transducers then produce a generator current, which represents the strength of the stimulation, which is sent to the sensory neuron and causes the repeated action potentials. If the Pacinian Corpuscle is used as an example, a lighter touch on skin would produce less action potentials than a very hard push on skin. The small dynamic range of the Hodgkin Huxley model represents that only a very mid range sensation would cause the sensory neuron to react, while with the Traub neuron a very light touch and a very hard push could all be accurately represented by the sensory neuron's action potentials.

Closer Look at 0 → 10 muA

muA 0 → 10, in steps of 0.5

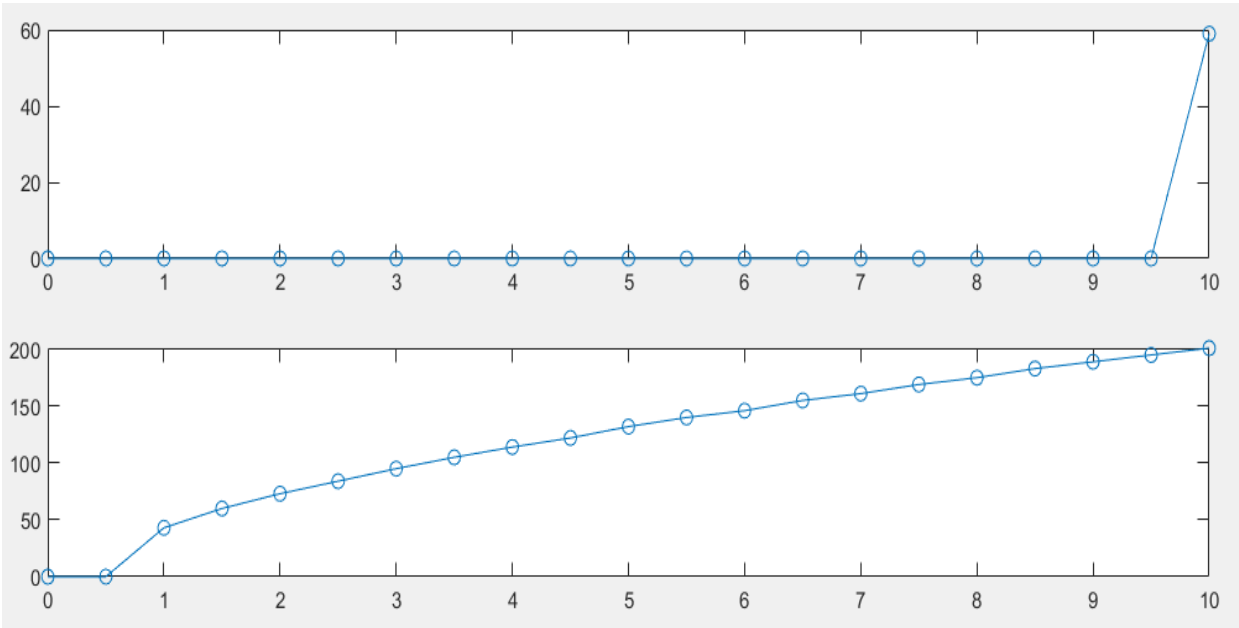

After our presentation Professor Peskin mentioned that looking at the muA from 0 → 10 in very small time steps might yield interesting results. You can see here, we simulated the two neurons again in steps of 0.5 muA, while before we went in steps of 5 muA. The Hodgkin Huxley model on top produced zero action potentials from 0 to 9.5 muA, and then jumped to 60 action potentials per second at 10 muA. However, the Traub neuron was able to start producing action potentials at 1 muA, and had a slightly smaller jump to a bit less than 50 action potentials per second, with a steady increase from there to 200 action potentials at 10 muA. The jumps themselves were not radically different, 60 action potentials versus 50. However, as a ratio to the highest action potential frequency is quite different. The Hodgkin Huxley model at a capacitance 1.0 only reaches about 110 action potentials per second at its peak. The jump from 0 to 60 action potentials is therefore a fairly large portion of 110, its highest point. However, the Traub neuron has a peak of over 600 action potentials, so the jump to around 50 action potentials is a much smaller portion of its highest point. This further shows that the Traub neuron is capable of much more nuance due to its large dynamic range, and is a much better representation of a sensory neuron's true capabilities.