Teams: mxxyv7m

CSC061

Operating Systems
作業系統

吳俊興
國立高雄大學 資訊工程學系

Spring 2026

How to Operate the Computer?

Computer System Structure

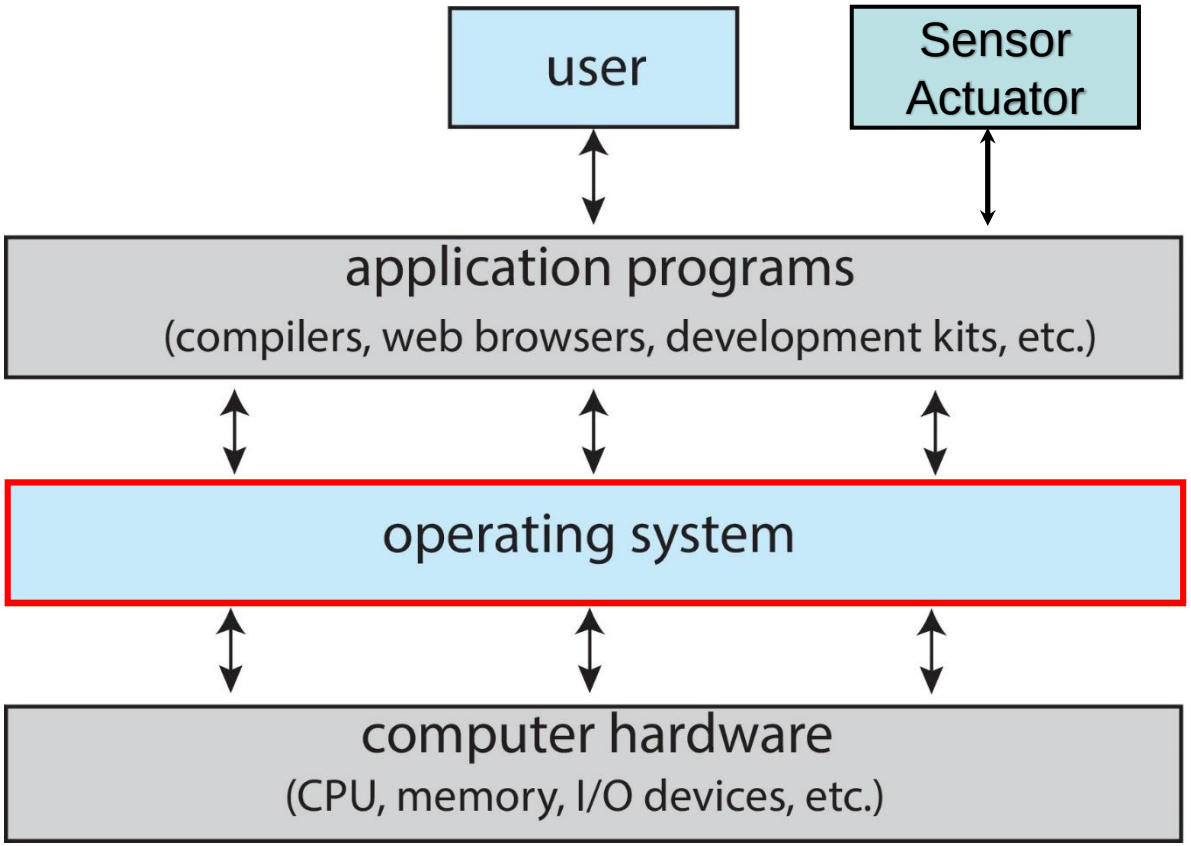

Embedded vs.
General Purpose

An OS is a program that acts as an intermediary between a user of a computer and the computer hardware

A Simple Bus-based Computer System

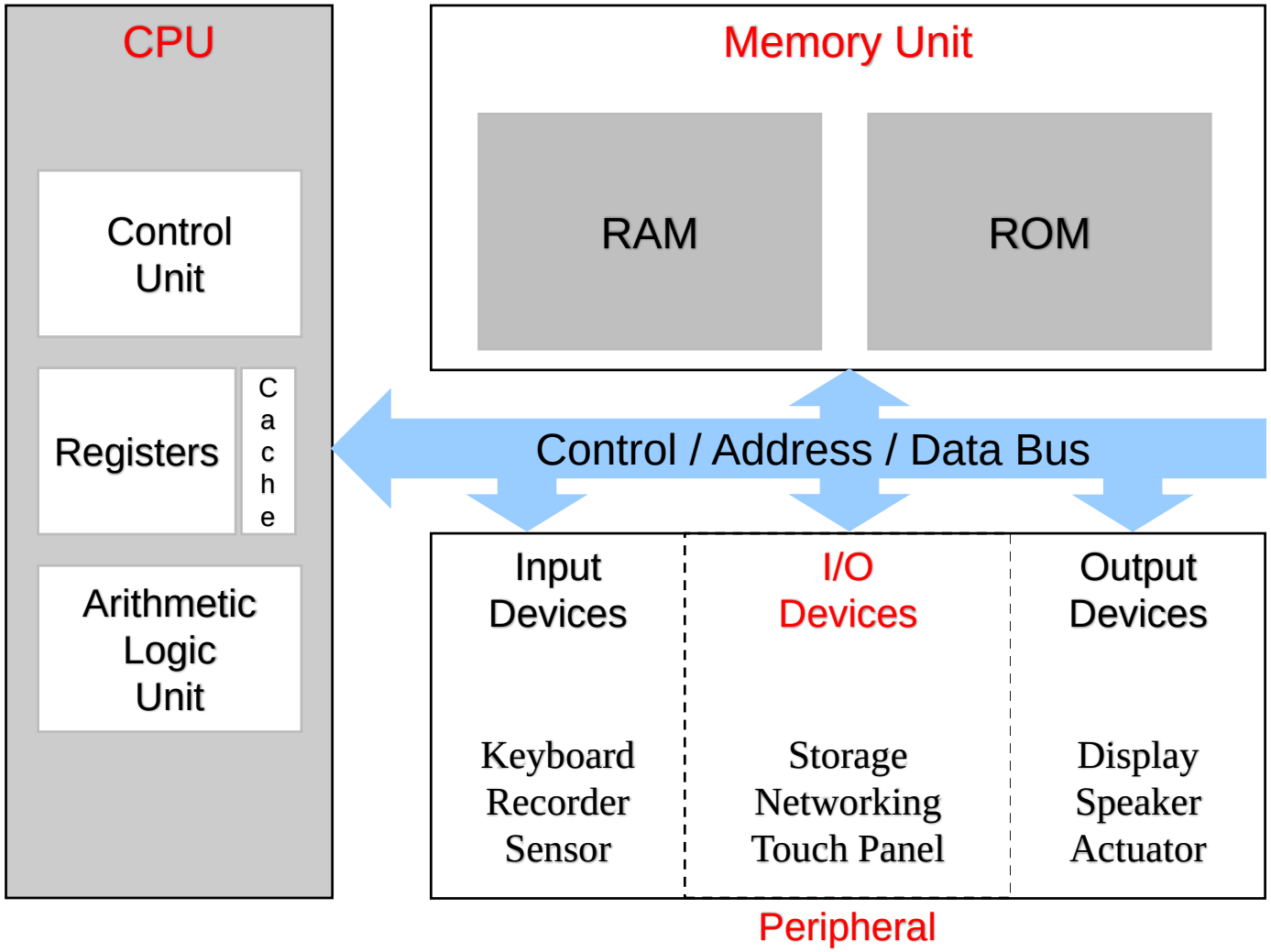

Simple 8088 System Example

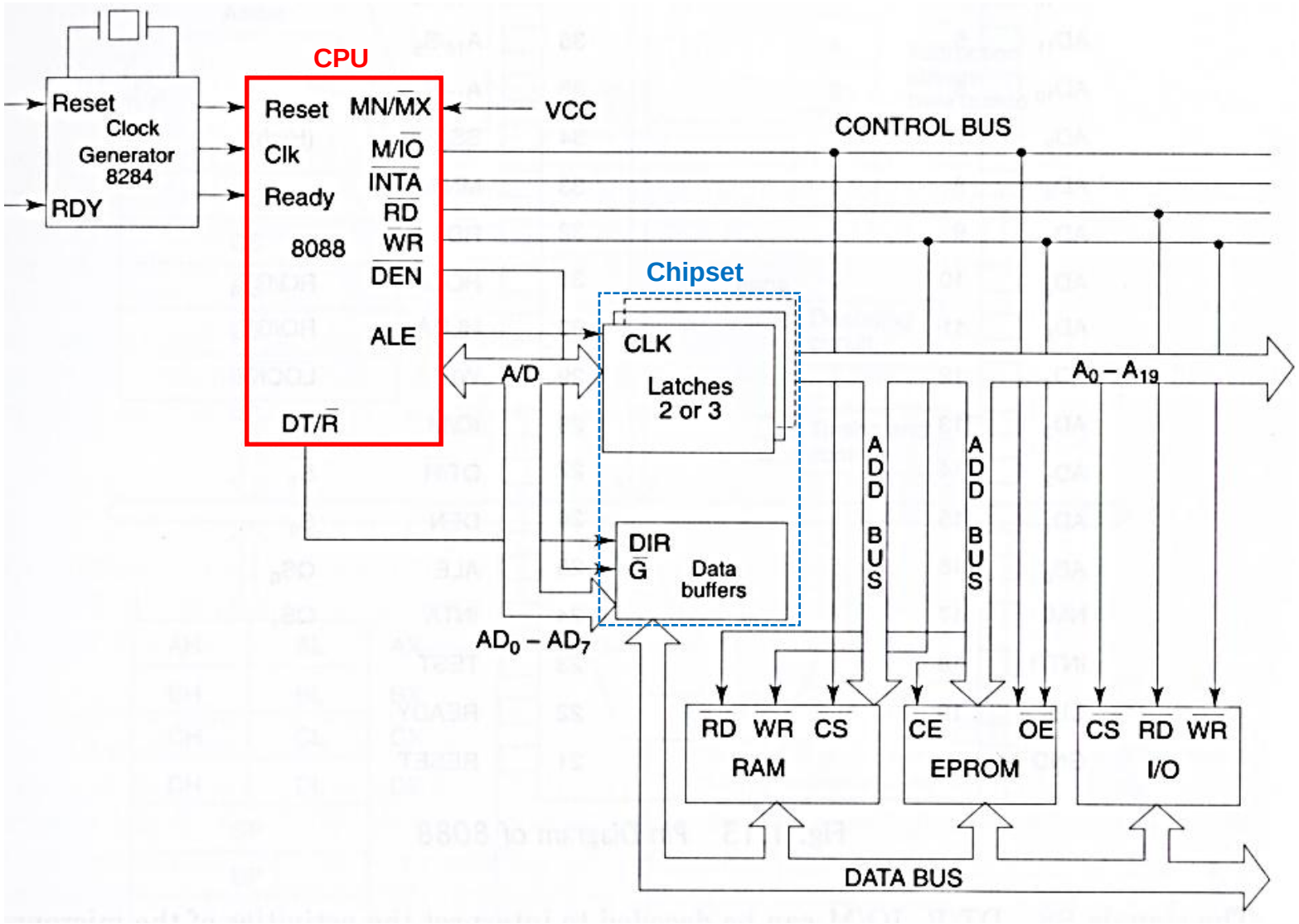

A Typical North/South Bridge Layout

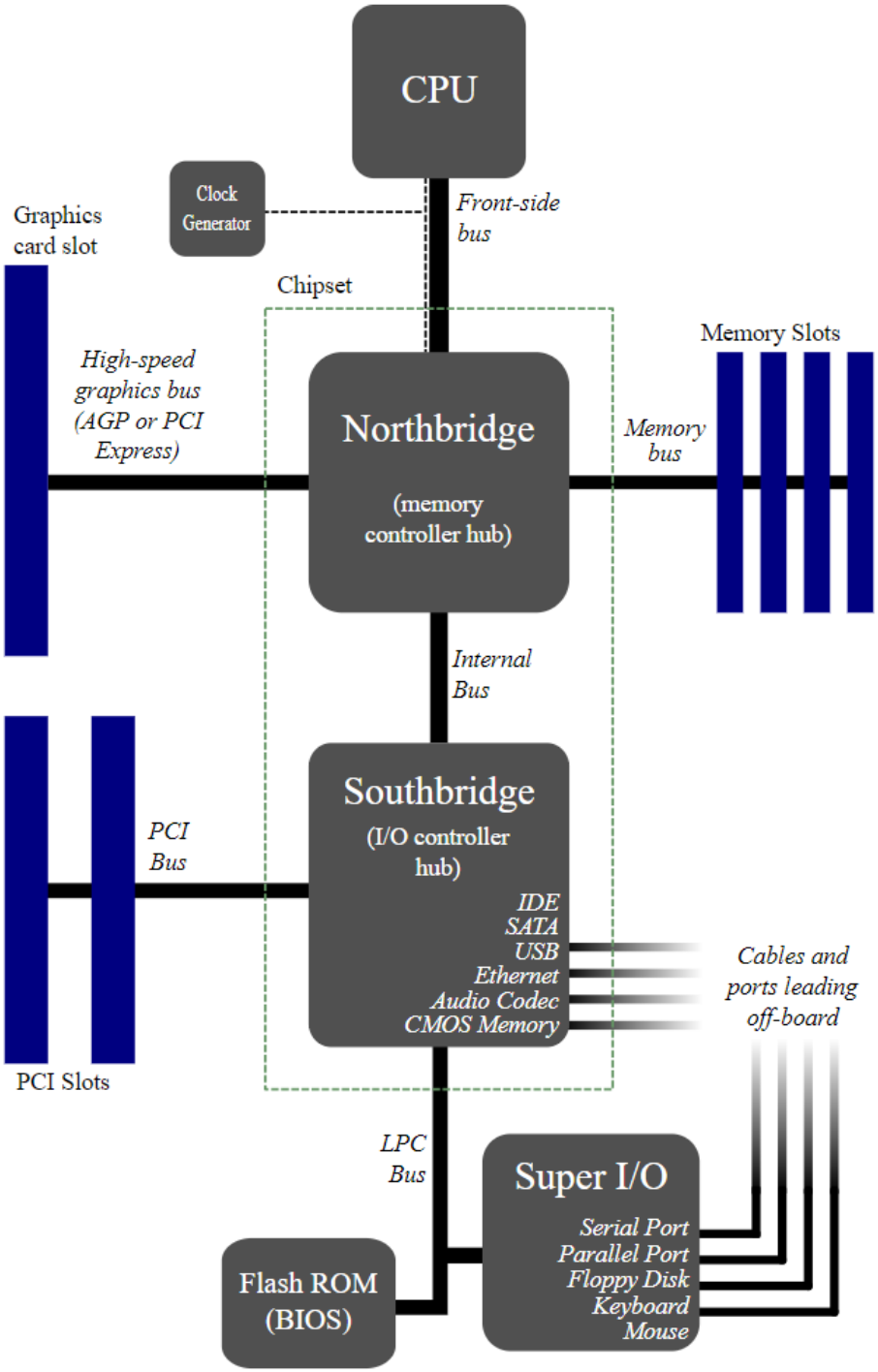

FSB - Front Side Bus
PCI - Peripheral Component Interconnect
LPC - Local Pin Count (for ISA bus)

MCH - Memory Controller Hub
ICH - I/O Controller Hub

https://en.wikipedia.org/wiki/Northbridge_(computing)

Intel Z690 Chipset

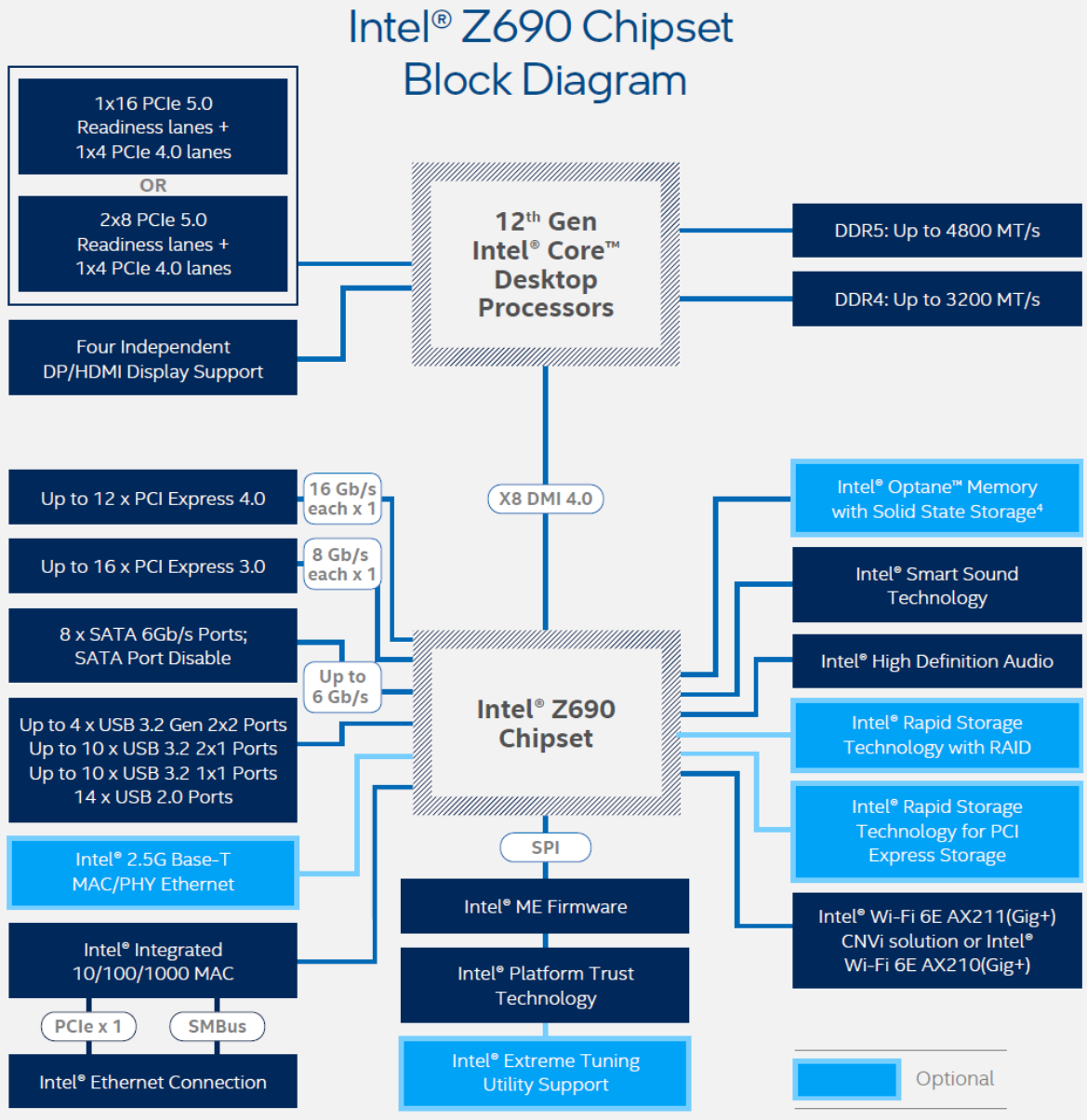

DMI - Direct Media Interface
GT/s - Giga-Transfers per sec
(80% for 8/10 encoding)
SPI - Serial Peripheral Interface

https://www.intel.com/content/www/us/en/products/docs/chipsets/desktop-chipsets/z690-chipset-brief.html

System on a Chip (SoC)

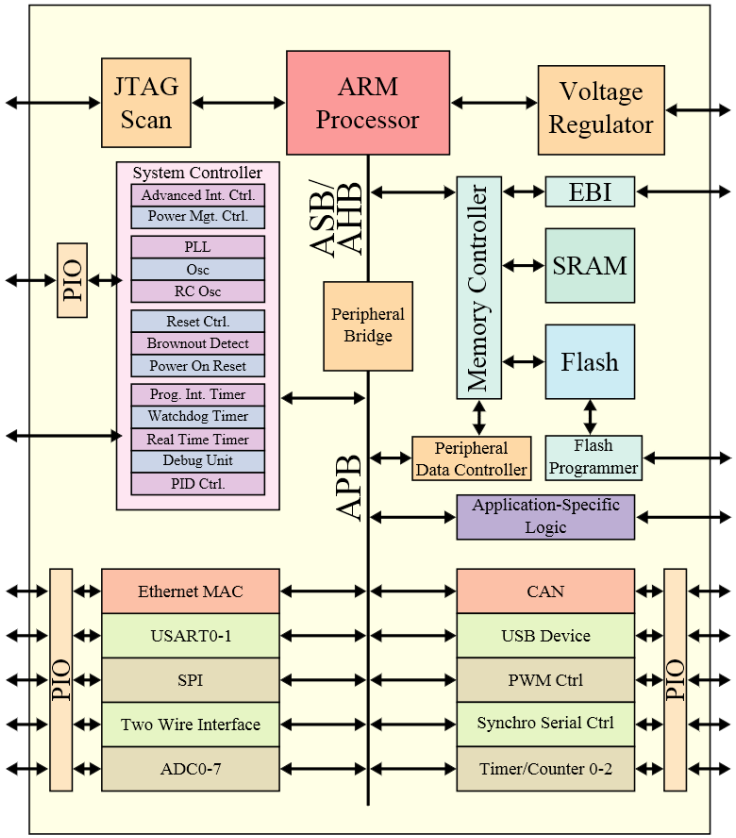

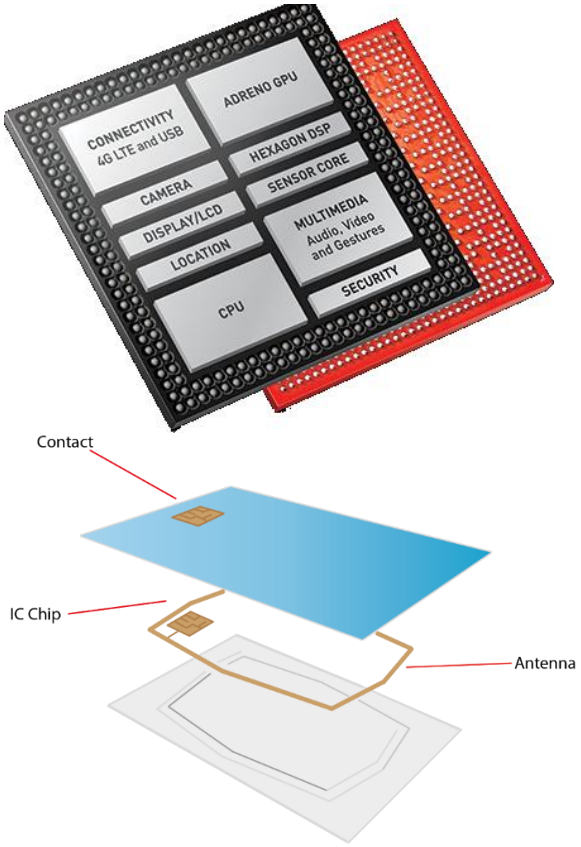

Apple iPhone XR and A12 Bionic

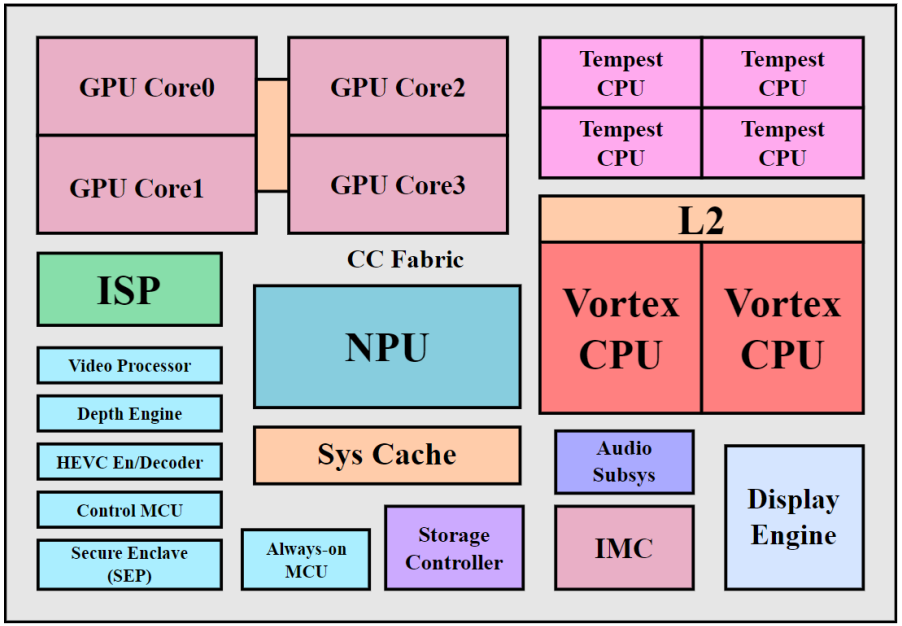

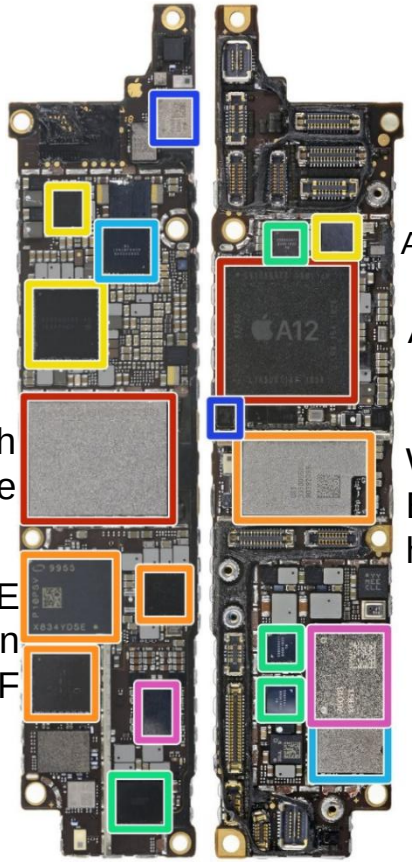

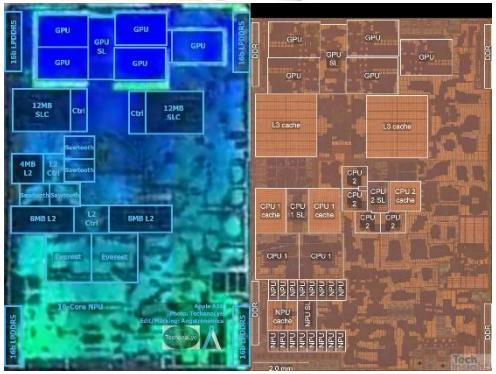

A16 vs. A15

iPhone 14 Pro Teardown, https://unitedlex.com/insights/apple-iphone-14-pro-teardown-report/
https://en.wikipedia.org/wiki/Apple_silicon

11.8B transistors of size 88 mm^2 with 5nm process (A14, 2020)
15B transistors of size 107.68 mm^2 with 5nm N5P process (A15, 2021)
16B transistors of size 112.75 mm^2 with 4nm N4 process (A16 Bionic, 2022)
19B transistors of size 103.80 mm^2 with 3nm N3B process (A17 Pro, 2023)

Comments on Operating Systems

- An operating system (OS)
  - *Defines a software interface* of the computer hardware and the architecture with which computer engineers can control and exploit the hardware to provide maximum benefit to the user
  - *Manages sharing of resources* (hardware and software) among the computer's users (user programs and systems programs)
- Students should
  - understand the *basic principles* and the *purposes* of an OS prior to a study of digital instrumentation and embedded systems
  - It is necessary to addresses both *the use* of OS (externals) and *their design and implementation* (internals)

課程資訊

教學目標:

作業系統是電腦系統運作的基本要件之一，本課程介紹作業系統的基本觀念及演算法，並以多種商用普及的作業系統為例，使學生對現代電腦的軟硬體運作有更深入的了解。

上課時間: 星期二 13:10 – 16:05

上課地點: C01-107

Objectives

- Learn how OS works and interacts with the hardware
- Learn how to manage resources
- Learn how to utilize OS and optimize application software
- …

Textbook

教科書
Silberschatz, Galvin, and Gagne,
Operating System Concepts,
John Wiley & Sons, Inc.

10th Edition, 2019 (國際學生版)
10th Edition, 2018
https://www.os-book.com/OS10/

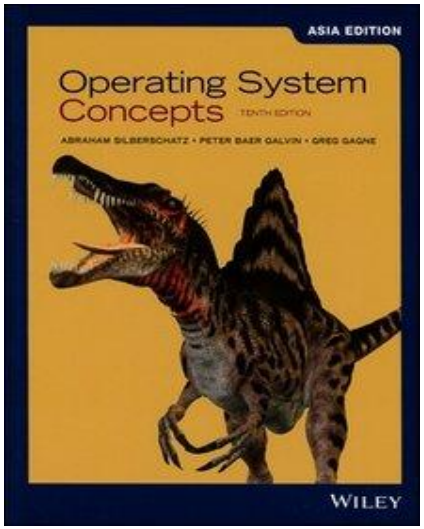

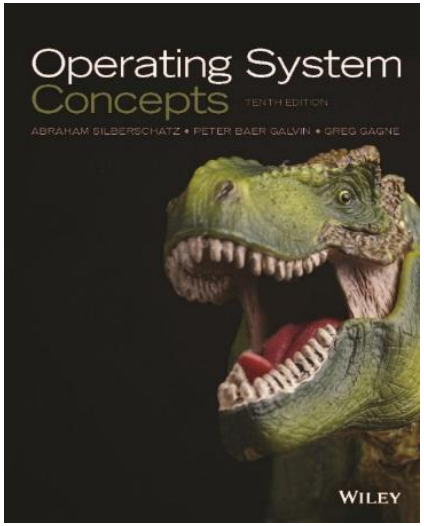

課程內容與進度(10e)

Part I – Overview
Ch1. Introduction
Ch2. Operating-System Structures
Part II – Process Management
Ch3. Processes
Ch4. Threads & Concurrency
Ch5. CPU Scheduling
Part III – Process Synchronization
Ch6. Synchronization Tools
Ch7. Synchronization Examples
Ch8. Deadlocks
Part IV – Memory Management
Ch9. Main Memory
Ch10. Virtual Memory
Part V – Storage Management
Ch11. Mass-Storage Structure
Ch12. I/O Systems
Part VI – File System
Ch13. File-System Interface
Ch14. File-System Implementation
Ch15. File-System Internals
Part VII–Security and Protection
Ch16. Security
Ch17. Protection
Part VIII – Advanced Topics
Ch18. Virtual Machines
Ch19. Network and Distributed Systems
Part IX – Case Studies
Ch20. The Linux System
Ch21. Windows **10**
Part X - Appendices
ChA. Influential Operating Systems
ChB. Windows 7
ChC. BSD Unix
ChD. The Mach System
ChE. Exercises

參考書(校內電子書)

- Dennis Matotek, James Turnbull, Peter Lieverdink, Pro Linux System Administration: Learn to Build Systems for Your Business Using Free and Open Source Software, Second Edition, Apress, 2017
  https://link.springer.com/book/10.1007%2F978-1-4842-2008-5
  https://www.apress.com/gp/book/9781484220078

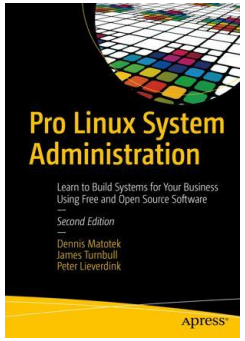

- Christopher Negus, Linux Bible, Ninth Edition, John Wiley & Sons, 2015
  https://onlinelibrary.wiley.com/doi/book/10.1002/9781119209539

- ander van Vugt, Beginning the Linux Command Line, Second Edition, Apress, 2015
  https://link.springer.com/book/10.1002/9781119209539

- Richard Blum, Christine Bresnahan, Linux Command Line and Shell Scripting Bible, Third Edition, John Wiley & Sons, 2015
  https://onlinelibrary.wiley.com/doi/book/10.1002/9781119209409

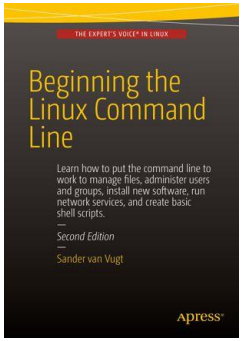

Pro Linux System Administration (2nd Edition, 2017)

Table of Contents

Part I: The Beginning

Chapter 1: Introducing Linux

Chapter 2: Installing Linux

Chapter 3: Introducing VirtualBox, Git, and Vagrant

Chapter 4: Linux Basics

Chapter 5: Users and Groups

Chapter 6: Startup and Services

Chapter 7: Networking and Firewalls

Chapter 8: Package Management

Chapter 9: Storage Management and Disaster Recovery

Part II: Making Linux Work for You

Chapter 10: Infrastructure Services: NTP, DNS, DHCP, and SSH

Chapter 11: Web and SQL Services

Chapter 12: Mail Services

Chapter 13: File Sharing and Printing

Chapter 14: Backup and Recovery

Chapter 15: Networking with VPNs

Chapter 16: Directory Services

Chapter 17: Performance Monitoring and Optimization

Chapter 18: Logging and Monitoring

Chapter 19: Configuration Management

- Native Linux – Ubuntu
  https://www.ubuntu.com/
- Textbook's OSC10e VM
  http://cs.westminstercollege.edu/~greg/osc10e/vm/
- Windows Subsystem for Linux
  https://docs.microsoft.com/en-us/windows/wsl/

參考書 Linux

- Using and Administering Linux - Zero to SysAdmin, Volume 1: Getting Started
  https://link.springer.com/book/10.1007/978-1-4842-5049-5
- Using and Administering Linux - Zero to SysAdmin, Volume 2: Advanced Topics
  https://link.springer.com/book/10.1007/978-1-4842-5455-4
- Using and Administering Linux - Zero to SysAdmin, Volume 3: Network Services
  https://link.springer.com/book/10.1007/978-1-4842-5485-1
- The Linux Philosophy for SysAdmins And Everyone Who Wants To Be One
  https://link.springer.com/book/10.1007/978-1-4842-3730-4

- Basic Linux Terminal Tips and Tricks Learn to Work Quickly on the Command Line
  https://link.springer.com/book/10.1007/978-1-4842-6035-7
- Beginning Ethical Hacking with Kali Linux Computational Techniques for Resolving Security Issues
  https://link.springer.com/book/10.1007/978-1-4842-3891-2
- Practical LPIC-3 300 Prepare for the Highest Level Professional Linux Certification
  https://link.springer.com/book/10.1007/978-1-4842-4473-9
- Red Hat Certified Engineer (RHCE) Study Guide Ansible Automation for the Red Hat Enterprise Linux 8 Exam (EX294)
  https://link.springer.com/book/10.1007/978-1-4842-6861-2

參考書

Official Ubuntu Documentation
https://help.ubuntu.com/

- Ubuntu Installation Guide, https://help.ubuntu.com/lts/installation-guide/i386/install.en.pdf
- Ubuntu Server Guide, https://help.ubuntu.com/lts/serverguide/serverguide.pdf

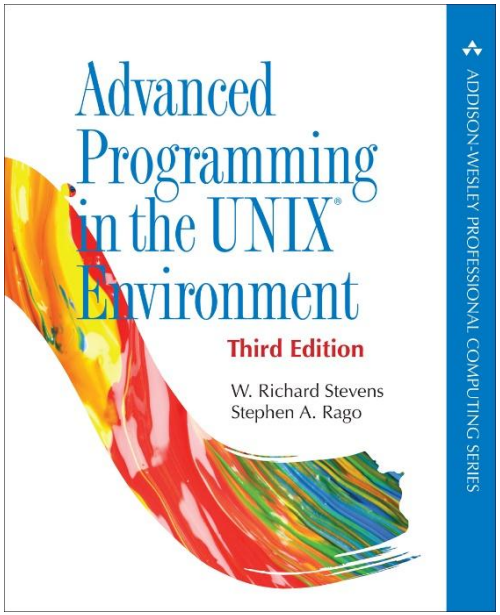

- W. Richard Stevens and Stephen A. Rago, Advanced Programming in the UNIX Environment, Third Edition, Addison-Wesley, 2013, ISBN 978-0-321-63773-4, http://www.apuebook.com/cover3e.html

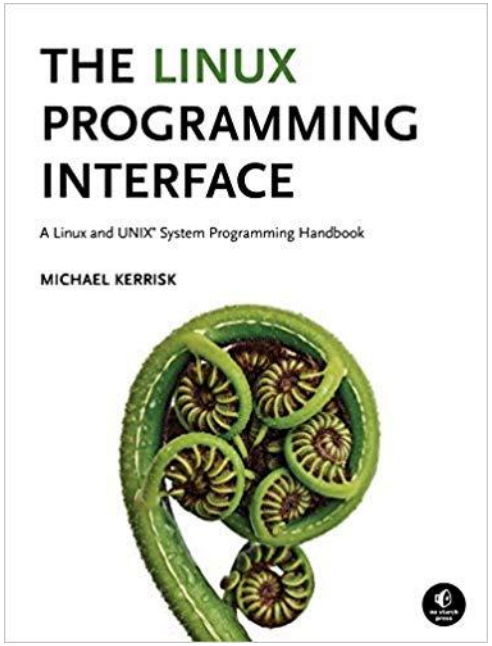

- Michael Kerrisk, The Linux Programming Interface: A Linux and UNIX System Programming Handbook, Second Edition, No Starch Press, ISBN 978-1-59327-220-3, http://man7.org/tlpi/

評分標準 (暫定)

- **考試 (60%)**
  - 兩次期中小考 (10%)
  - 期中考 (25%)
  - 期末考 (25%)
- **作業 (30%) (10%*3)**
  1. Project 1: Linux Practices
  2. Project 2: Introduction to Linux Kernel Modules
     - Project 0: Build a command-line based Ubuntu Server
       http://cs.westminstercollege.edu/~greg/osc10e/vm/
     - Project: Programming Projects
  3. Project 4-2: Multithreaded Sorting Application
- **課堂表現(10%)**

Schedule

1	2/24	預備週	10	4/28	
2	3/03		11	5/05	
3	3/10	自主學習	12	5/11	程式作業(二)
4	3/17		13	5/19	期中小考(二)
5	3/24		14	5/26	
6	3/31	期中小考(一)	15	6/01	程式作業(三)
7	4/07		16	6/09	期末考
8	4/13	程式作業(一)	17	6/16	
9	4/21	期中考	18	6/23	自主學習

上課規則

- 請尊重版權
  - 不得使用盜版、影印版或中文版
  - 違者每次扣學期成績一分
- 手機請關機
  - 發出鈴響每次扣學期成績一分
- 電腦(含平板)的使用
  - 上課時可用於輔助學習，但不得發出聲響或進行任何與本課程無關之使用
  - 違者將禁止上課使用電腦，每次並扣學期成績一分
- 作業不得抄襲
  - 抄襲者與被抄襲者均以零分計算

連絡資訊

授課教師：吳俊興

E-mail: w u c h @nuk. edu. tw

Tel: (07) 591-9516

Office: 綜合大樓206室

Office hours:

星期一、三：12:10 - 13:00 PM

by appointment

助教：林家禾 (M1145505)