Convertible Car Top Mechanism

A convertible vehicle roof mechanism enables a car to transition between an open-top configuration and a closed-roof configuration.

The main kinematic design of a retractable roof must satisfy several requirements. First, the roof module must move between the fully closed and fully open configurations without collision or interference, while ensuring proper sealing in the closed configuration. Second, the mechanism must fold and package the roof within a restricted storage volume behind the passenger compartment. Third, it must minimize the power required from the actuator system, which is typically driven by electric motors or hydraulics.

Optionally, read more about various designs and purposes of convertibles through the following Google patents:

- https://patents.google.com/patent/US7014247B2/
- https://patents.google.com/patent/US6572175B2/
- https://patents.google.com/patent/US7896423B2/
- https://patents.google.com/patent/US20090160224A1/

Part I: Kinematic Analysis (Due on March 16)

Consider the following convertible roof top mechanism

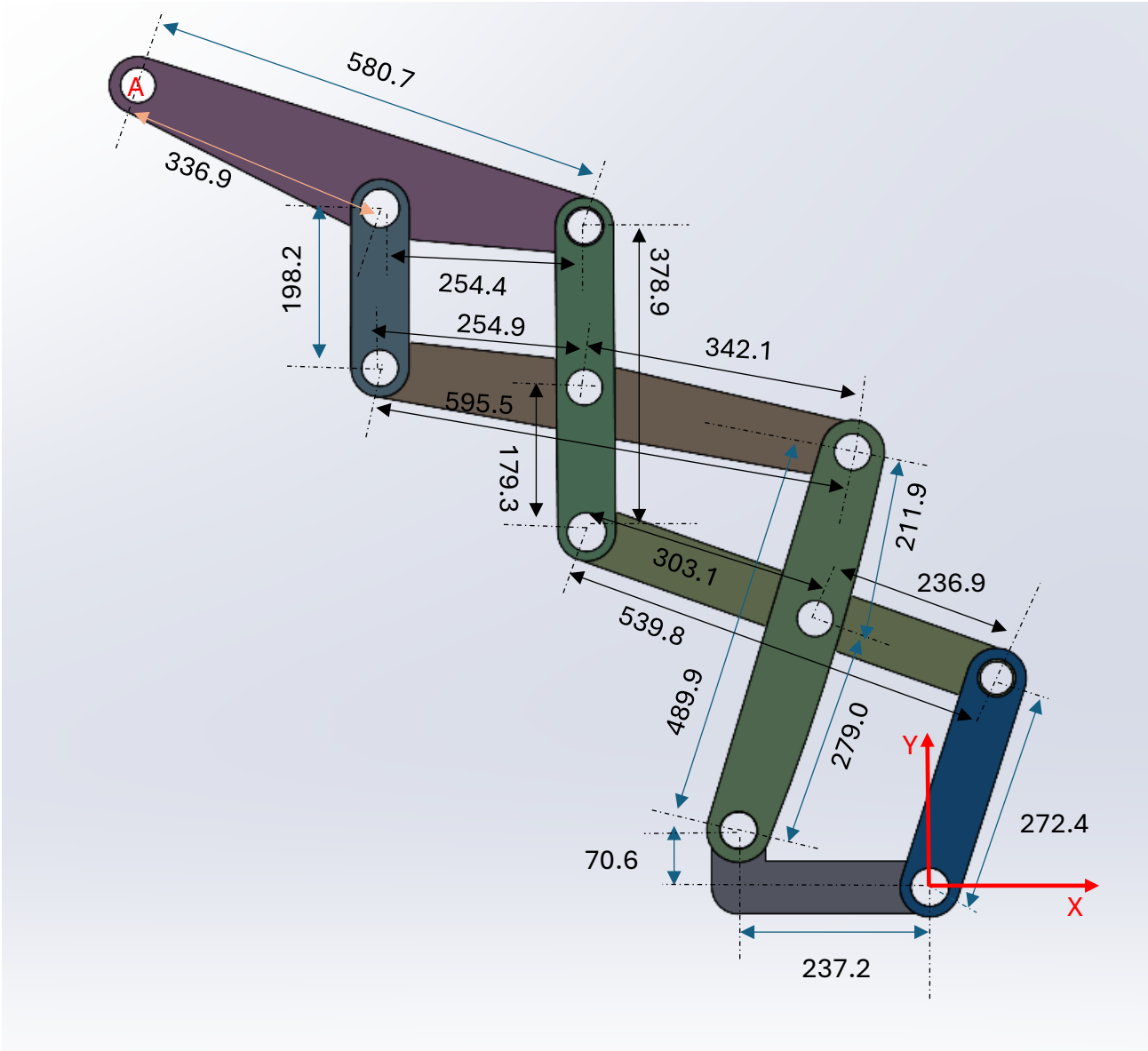

All dimensions are in *mm*.

An animation of the mechanism can be found on this link:
https://www.youtube.com/watch?v=8BP8BEGKmgY

1) Identify all links and joints. Clearly label them on the figure. Show your work to determine the mobility of the mechanism

2) Input link is the one with length 272.4 mm. Generate the vector loop equations for a complete kinematic analysis of the mechanism, and list the knowns, the unknown variables, and any constraints. Write symbolically, the equations needed to solve for the position variables of all the moving links.

3) Posture analysis
    a. Solve the position variables for all links as the input link angle varies over the range $0° \leq \theta_2 \leq 120°$. Discretize at 1° increment (0, 1, 2, …, 120). Your solution must be using numerical technique (Newton-Raphson). Show Newton-Raphson formulation (Jacobian, etc.). Present your results in tabular format and as graphs.
    b. Identify the four-bar linkage. Solve the two unknowns analytically using closed-form solution for any two input angles. Verify your numerical solution to Question 3a for those input angles.
    c. Using point path, determine the path traced by Pin A. Discretize the range of input angles with a 1° angle and tabulate your numerical results for each input angle. Also, plot the locus of the path (X vs Y coordinates).

4) Velocity and acceleration analysis
    a. Differentiate your vector loop equations to determine the first-order and second-order kinematic coefficients of the mechanism. Show your work. Calculate these coefficients for each input angle using a computer code. Present your numerical results for all links in tabular format and as graphs. Discretize the range of input angles with a 1° increment and show your results for each input angle.

    Assume a constant angular velocity for input link. Choose a reasonable value. State the velocity value you assumed. Use this value for Questions 4b and 4c

    b. Show work to calculate angular acceleration of all links. Discretize at 1° increment (0, 1, 2, …, 120). Present your results in tabular format and as graphs.
    c. Using point path, determine horizontal and vertical acceleration of Pin A. Discretize at 1° increment (0, 1, 2, …, 120). Present your results in tabular format and as graphs.

Your team will get a 7.5% bonus score for doing the following:

- Submitting all contents of Deliverable I with a “reasonable” attempt.
- Submission must be within the deadline (March 16) and following the format.
- You must submit both the report and the supplementary files for the intermediate deliverable. Your supplementary files are not graded for intermediate deliverables. Those are graded only during final submission (due on April 14). Therefore, the report must be a standalone document that contains all work and results, regardless of what is included in the supplementary files folder. Do not move figures or tables to the appendices. All direct answers to the questions must appear in the main body of the report, not in the appendices. The presentation of your report carries credits.
- An individual contribution statement is mandatory for intermediate deliverables. Word limit is 100 per team member.
- Completed peer evaluation form (use exact template provided on D2L).

Deliverable Format for Final Deliverables

1. Report: A soft copy uploaded as a single PDF file per team to D2L. Deadline: April 14 at 11:59 pm (75% of the score)
   1.1. Technical content of the report.
   1.2. Summary of individual contribution.
   1.3. Completed peer evaluation form (use exact template provided on D2L).
2. Supplementary files: Drawings, annotated error-free computer programs, videos (if applicable) uploaded as a soft copy to D2L (Deadline: April 14 at 11:59 pm). It must be a single zipped folder. (25% of the score)

Each team member typically shares the same score for deliverables 1.1 and 2. Score for each student is adjusted based on 1.2 and 1.3. If a student fails to participate satisfactorily in the project, their score for 1.1 and 2 may differ from the team's.

Programming tasks in this project involve executing basic matrix operations, implementing Newton-Raphson's technique, plotting basic graphs, etc. You may use any one of these alternate languages: Python or Matlab. Codes must be error free when compiled and should replicate the results presented in your report.

All the derivations must be clear. The plots must be legible and labeled. Don't let figures and tables hang around without explanations in adjacent text. The discussions must be backed with analysis and graphs. Part of the report can be handwritten (for example, derivations). Although, I would expect graphs/tables and typed out content constitute most of the report. Technical report content will directly answer the questions. Codes, output from code, and drawings must be in the technical report appendices. Presentation of your results is as important as the accuracy of your analysis.