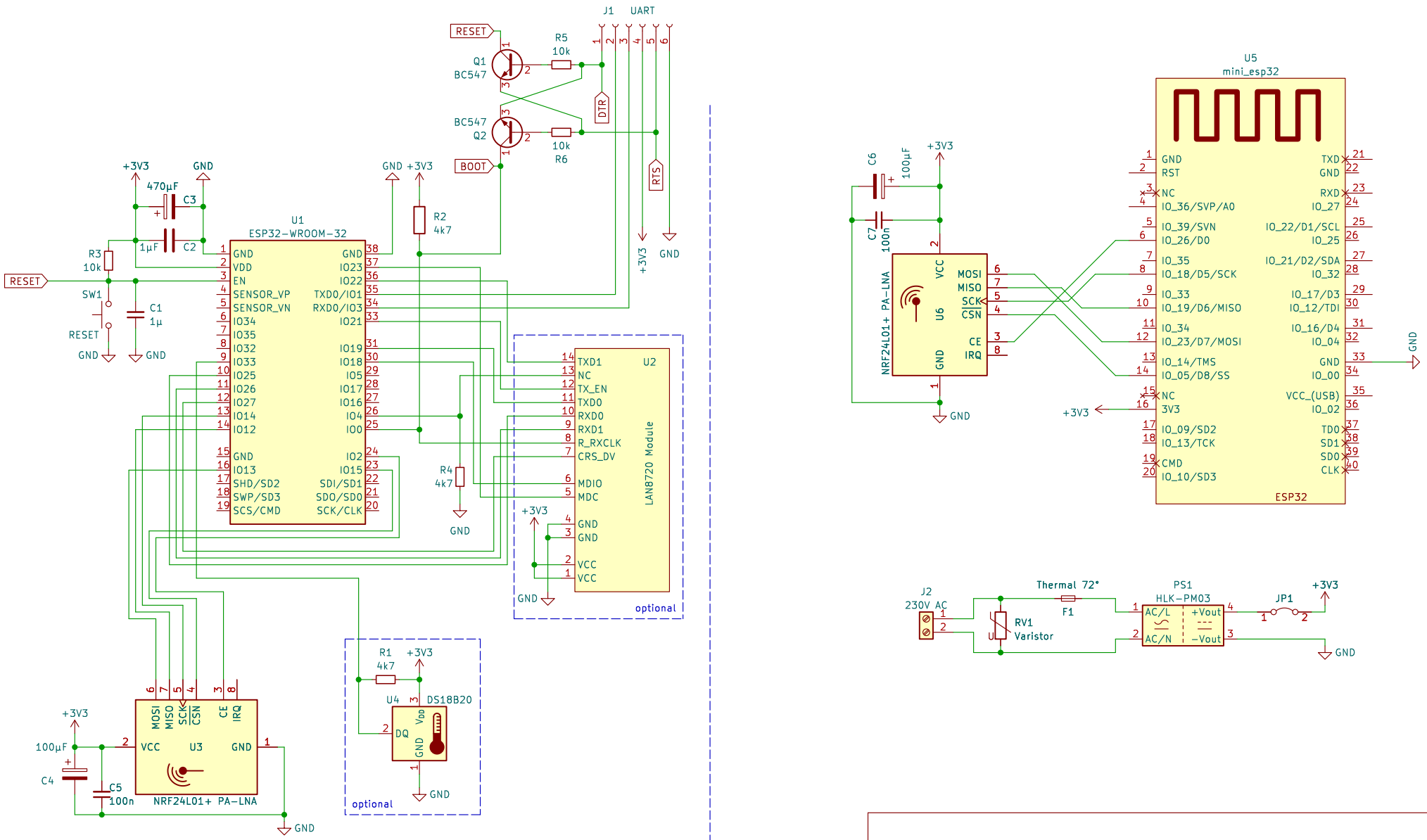

$Rev: 1667 $

Sheet: /
File: MyRepeater-ESP32-ETH.kicad_sch

Title: MyGateway-ESP32-ETH

Size: A4	Date:	Rev:
KiCad E.D.A. kicad 7.0.1		Id: 1/1