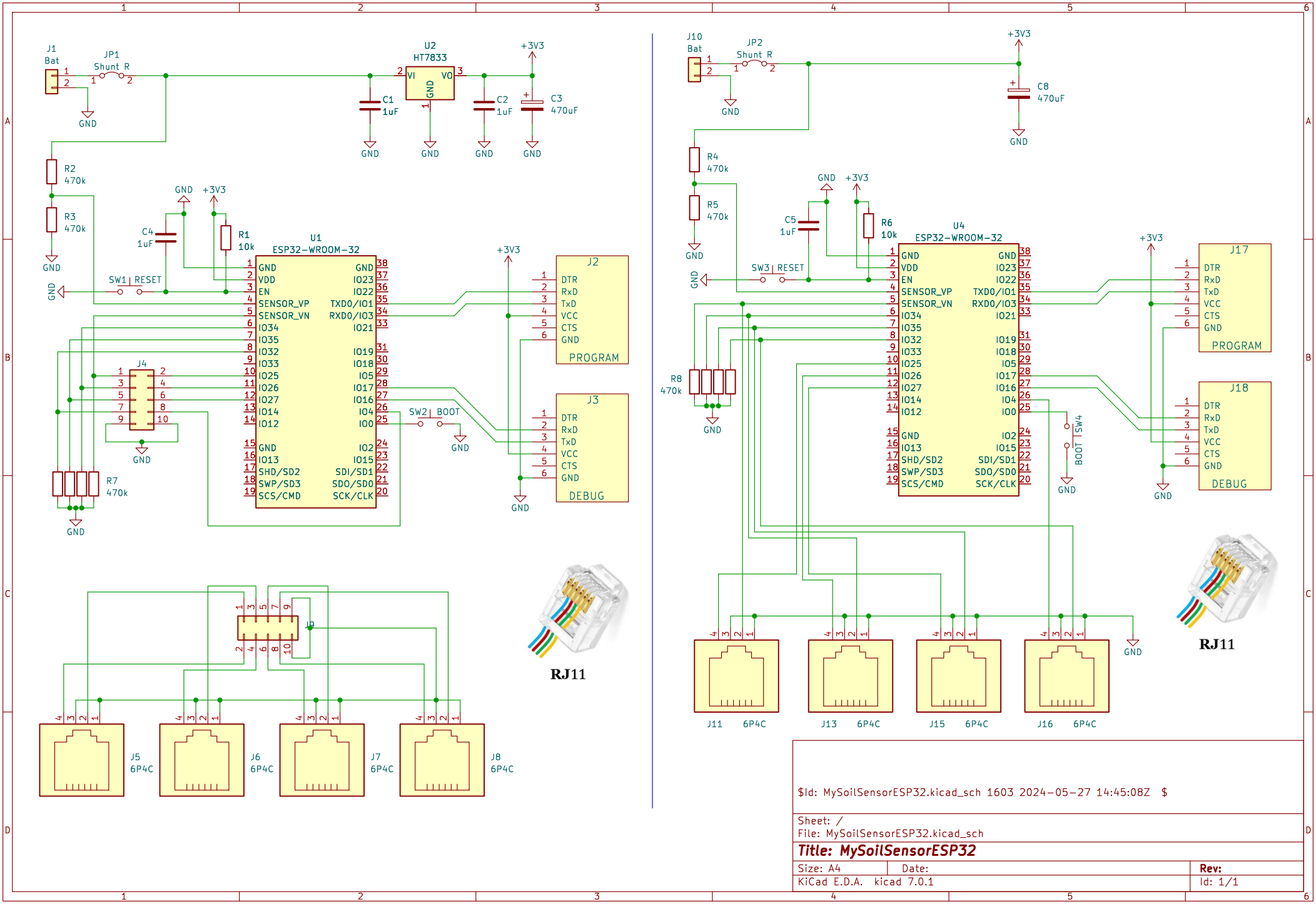

$Id: MySoilSensorESP32.kicad_sch 1603 2024-05-27 14:45:08Z $

Sheet: /
File: MySoilSensorESP32.kicad_sch

Title: MySoilSensorESP32

Size: A4	Date:	Rev:
KiCad E.D.A. kicad 7.0.1		Id: 1/1