# HW08 - Due Monday, 16-Mar, 10pm

Graded

**Student**

Chris Shi

**Total Points**

**15.5 / 20 pts**

**Question 1**

ADC Resolution and Step Size — **5** / 5 pts

1.1 **10-bit ADC step size** — **2** / 2 pts

- ✔ **+ 2 pts** Correct. 2.93mV
- **+ 0 pts** Incorrect

1.2 **12-bit ADC step size** — **2** / 2 pts

- ✔ **+ 2 pts** Correct. 732 uV
- **+ 0 pts** incorrect

1.3 **Comparing ADC outputs** — **1** / 1 pt

- ✔ **+ 1 pt** Correct. 12 bit
- **+ 0 pts** Incorrect

**Question 2**

Binary Output of an ADC — **2** / 4 pts

2.1 **Binary output** — **2** / 3 pts

- **+ 3 pts** Correct
- ✔ **+ 2 pts** Work shown
- **+ 1 pt** Attempt at work shown
- **+ 0 pts** Incorrect

answer should be in 8 bit binary

2.2 **Error in conversion** — **0** / 1 pt

- **+ 1 pt** Correct. 5.94 mV
- ✔ **+ 0 pts** incorrect

Question 3

## Digital Music Sampling

**2** / 2 pts

- ✔ **+ 1.25 pts** Mentions Nyqhuist Freuquency and Sampling in detail
- ✔ **+ 0.75 pts** Mentions range of frequencies of human hearing and relation to sampling frequency
- **+ 0.25 pts** Vague concept of Nyqhuist Frequency and Sampling
- **– 0.1 pts** Tiny mistake
- **– 0.25 pts** Minor mistake
- **– 0.5 pts** Bigger mistake
- **– 0.1 pts** Unassigned pages
- **+ 0 pts** Click here to replace this description.

Question 4

## Power Absorbed by DAC

**0.5** / 2 pts

- ✔ **+ 2 pts** Correct
- **– 0.25 pts** Minor mistake
- **– 0.5 pts** Major mistake
- ✔ **– 1 pt** One part incorrect
- ✔ **– 0.5 pts** Many parts incorrect
- **+ 0 pts** Wholly incorrect
- **– 0.1 pts** Unassigned page

2 There isn't a 10k ohm resistor with 3.75 volts across it

**Question 5**

2-bit Resistor Ladder DAC **3** / 3 pts

5.1 **Calculating Vout** **2** / 2 pts

- ✔ **+ 0.5 pts** Recognized that only top transistor is on and other transistors are off, so circuit forms a resistor divider
- ✔ **+ 0.5 pts** Simplified circuit using parallel resistors rule
- ✔ **+ 0.5 pts** Used voltage division on simplified circuit to calculate Vout with top resistor values R (10k) and bottom resistor 0.75R (7.5k)
- ✔ **+ 0.5 pts** Correctly calculated actual value of Vout=2.14V
- **+ 0 pts** Anything else/no work shown
- **– 0.2 pts** Did not correctly assign pages

5.2 **Possible solution** **1** / 1 pt

- ✔ **+ 1 pt** We want Vout to be 3.75V but the actual Vout we get using voltage division is 2.14V. Using an op-amp buffer keeps the output voltage the same as the input voltage, which eliminates this problem
- **+ 0 pts** Anything else or incorrect justification
- **– 0.1 pts** Incorrectly assigned pages

**Question 6**

3-bit R-2R DAC **3** / 4 pts

6.1 **Vx and Vy** **2** / 3 pts

- **– 0 pts** **Correct**: $V_X = 2.66V$, $V_Y = 2.82V$
- **– 0.5 pts** **Partial**: Minor algebraic errors
- ✔ **– 1 pt** **Partial**: Major algebraic errors
- **– 2.5 pts** **Partial**: Attempts to simplify circuit using equivalent resistance or voltage division
- **– 3 pts** **Incorrect**

1 You are on the right track. Trying using nodal analysis from KCL equations

6.2 **Vout** **1** / 1 pt

- **– 0 pts** **Correct**: $V_{OUT} = 1.875V$
- ✔ **– 0 pts** **Incorrect**: Error carried over, but correct setup
- **– 1 pt** **Incorrect**

No questions assigned to the following page.



# 18-100: Introduction to Electrical and Computer Engineering

## HW08: ADCs, DACs, and Time-Varying Signals

Writeup Due: Monday, March 16th, 2026, at 10:00 PM

Name: _____ (please print legibly)

Andrew ID: _____ (please print legibly)

How to submit homework assignments:

Write out your solutions to the following homework questions neatly and clearly on paper, and scan them into a PDF using a scanner or mobile scanning app (such as CamScanner or Adobe Scan). Alternatively, you can write your solutions on a tablet or on your computer and export as a PDF.

Be sure to show all of your work and clearly indicate all steps you took to solve each problem. Name any concepts or laws that you use in your calculations. Don't forget to label your units! All work should be legible, as unreadable homeworks will not be graded.

Remember that collaboration on homework is okay, but all work submitted must be your own.

Once you have a PDF of your solutions, upload and submit it to Gradescope. Be sure to indicate which answer goes with which problem, as failing to correctly match pages in Gradescope could result in a loss of credit. Good luck!

| Question: | 1 | 2 | 3 | 4 | 5 | 6 | Total |
|---|---|---|---|---|---|---|---|
| Points: | 5 | 4 | 2 | 2 | 3 | 4 | 20 |
| Score: | | | | | | | |

Questions assigned to the following page: 1.1, 1.2, and 1.3



1. ADC Resolution and Step Size (5points)

Consider a low power microcontroller operating at a supply voltage of 3.00V (rather than 5V as in our class examples).

A. What step size would a 10-bit ADC have? Please show your work. (2points)

$3 \cdot 2^{-10}$ 2.92mV

B. What step size would a 12-bit ADC have? Please show your work. (2points)

$3 \cdot 2^{-12} = 0.73$ mV

C. Which ADC (10-bit or 12-bit) provides a more accurate output? Why? (1point)

a 12 bit because the steps are smaller, so we can be more accurate

Questions assigned to the following page: 2.1 and 2.2



2. Binary Output of an ADC (4points)

A. Your sensor output is 1.92V. You read it with a 5V, 8-bit ADC (as in our class examples). What is the binary output of the ADC? (3points)

$= \boxed{1.933V}$

$\left[1.92 / \frac{5}{2^8}\right] \cdot 1.92$

B. What is the amount of error in the conversion? Provide your answer in mV. (1point)

$1.933 - 1.92 = 13\ mV$

Question assigned to the following page: 3



3. Digital music is often sampled at 44.1kHz. Explain why this value is used to maintain the integrity of the music. (2points)

Because humans can hear ~20 kHz so by Nyquist, we need to sample at atleast double that frequency to uniquely determine the signal

Question assigned to the following page: 4



4. You are using a 2-bit resistance ladder DAC with $R = 10k\Omega$. You drive the decoder such that Vout is 3.75V. Assuming the power consumed by the decoder is negligible, what is the total amount of power absorbed by the DAC? (2points)

$P = IV = \frac{V^2}{R} = \frac{3.75^2 V}{10k\Omega} = 14mW$

$\Delta V = IR \Rightarrow I = \frac{\Delta V}{R}$

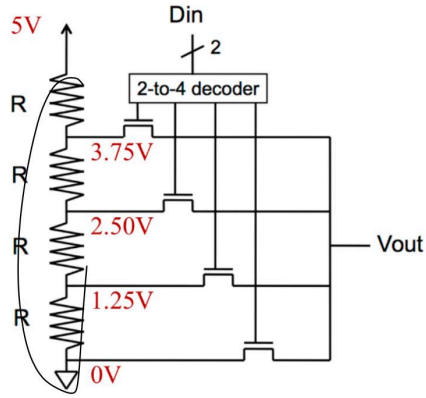

Questions assigned to the following page: 5.1 and 5.2



5. You are again using a 2-bit resistance ladder DAC with $R = 10k\Omega$. You drive the decoder intending that Vout is 3.75V.

A. If the output is connected by another $10k\Omega$ resistor to ground, what is the actual value of Vout? (2points)

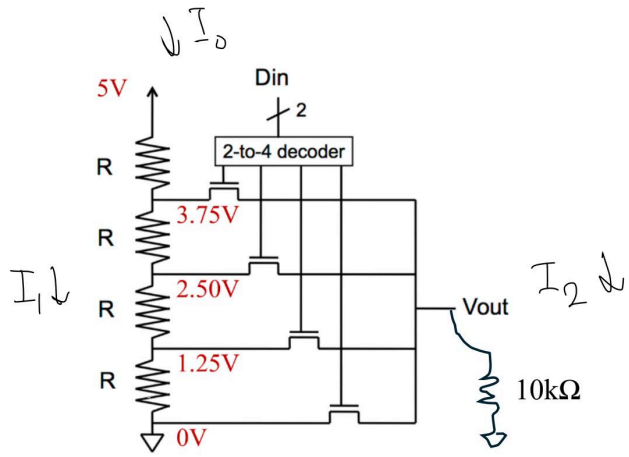


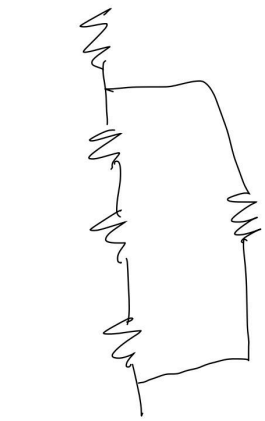

$\Delta V = IR$

$I_0 = \frac{\Delta V}{R} = \frac{5}{(\frac{7}{4})\cdot 10k} = \frac{20}{7}$

$I_1 + I_2 = \frac{20}{7} \cdot \frac{1}{10k}$

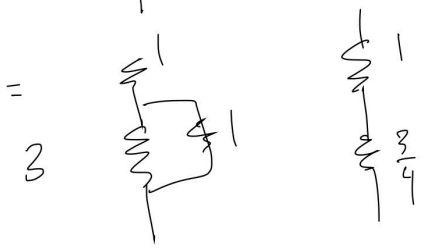


$= \frac{7}{4}$

$3RI_1 = RI_2$

$I_1 + I_2 = \frac{20}{70k}$

$\boxed{V_{out} = 2.1V}$

$I_1 = 0.07mA, \; I_2 = 0.21mA$

B. What did we recommend in class to remedy this problem? (1point)

Opamp buffer w/ self feedback

Questions assigned to the following page: 6.1 and 6.2



6. You are using a 3-bit, *R*-2*R* DAC, and you give the DAC an input of **011**.

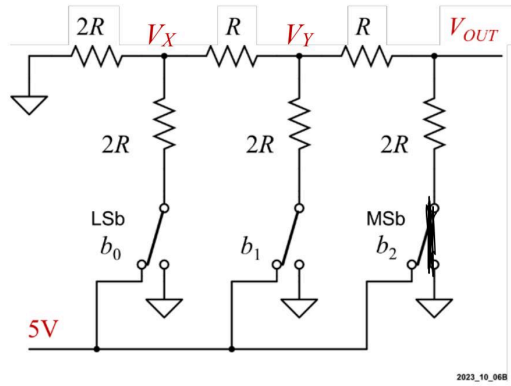


A. What is the voltage at $V_X$ and $V_Y$? (3points)

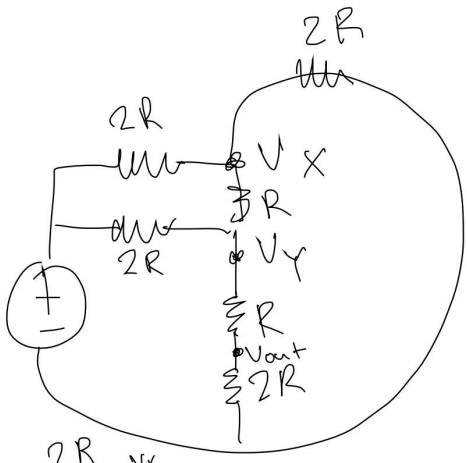


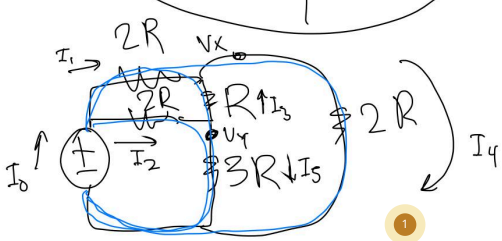


$I_1 2 + I_4 \cdot 2 = 5$

$I_1 2 - I_3 + 3I_5 = 5$

$2I_2 + 3I_5 = 5$

$I_1 + I_3 = I_4$

$I_3 + I_5 = I_2$

$V_X = 2.95$

$V_Y = 3.41$

B. What is the voltage at $V_{OUT}$? (1point)

$V_{out} = 2.27$