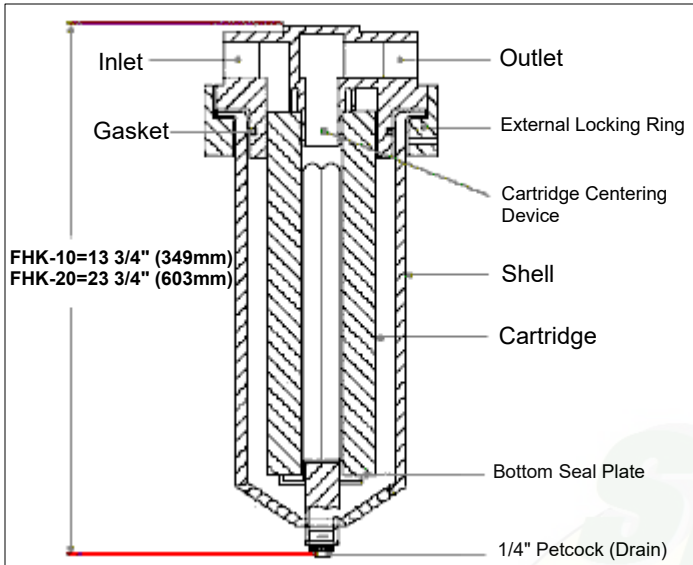

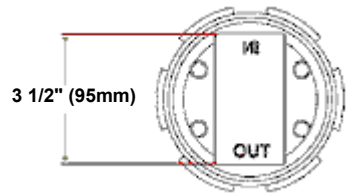

Mounting Bracket and Pin wrench Included

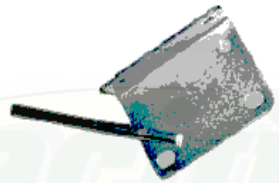

Max Temp. 99 C

Max Press. 300 PSI (2068 kPa)

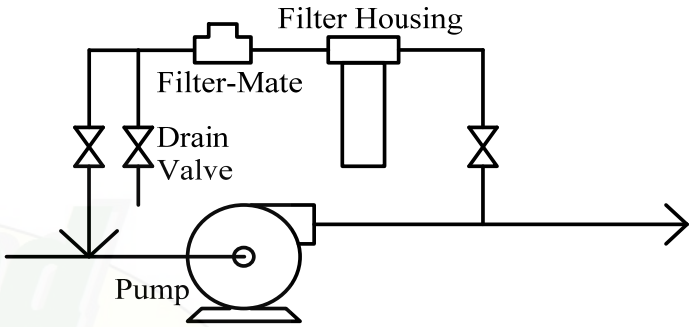

RECOMMENDED INSTALLATION

Model	Description	Connections	Side Stream Flow Rate	Volume
FHK-10	Stainless Steel, Single Cartridge Length	3/4" (19mm)	1 -10GPM (0-38LPM)	0.4US Gall. (1.5 L)
FHK-20	Stainless Steel, Double Cartridge Length	1" (25mm)	10-20GPM (38-76LPM)	0.8US Gall. (3.0 L)

Kits Include:

FHK-20
3 - 3" Nipples
2 - 1" Brass Ball Valves
1 - 1" Filtermate Flow Indicator
1- 20" Stainless Steel Filter Housing
Filter Cartridge

FHK-10
3 - 3" Nipples
2 - 3/4" Brass Ball Valves
1 - 3/4" Filtermate Flow Indicator
1- 10" Stainless Steel Filter Housing
Filter Cartridge

Revisions

Specified Technical Sales Ltd.

Title: **STS Stainless Steel Micron Filter Housing Kit**

__ **FHK-10**
__ **FHK-20**

Drawn by: Judith Vergara

Not To Scale

Date: May 30/2016

Drawing no. **ED 165-FHK**