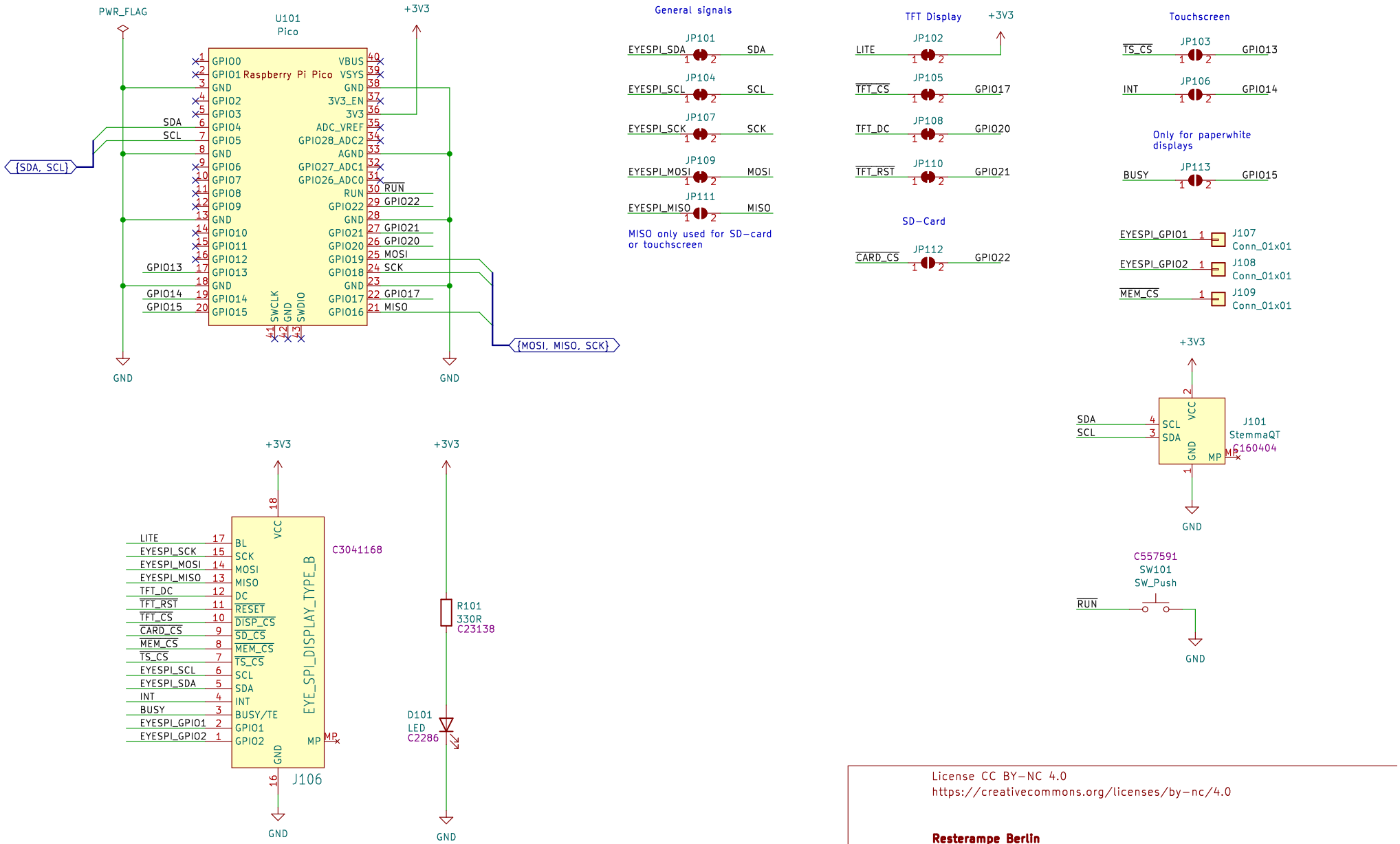

License CC BY-NC 4.0
https://creativecommons.org/licenses/by-nc/4.0

Resterampe Berlin

Sheet: /
File: EyeSPI-PiCowbell.kicad_sch

Title: EYESPI PiCowbell

Size: A4	Date: 2023-02-08	**Rev: 2.0.0**
KiCad E.D.A. kicad (6.0.11-0)		Id: 1/1