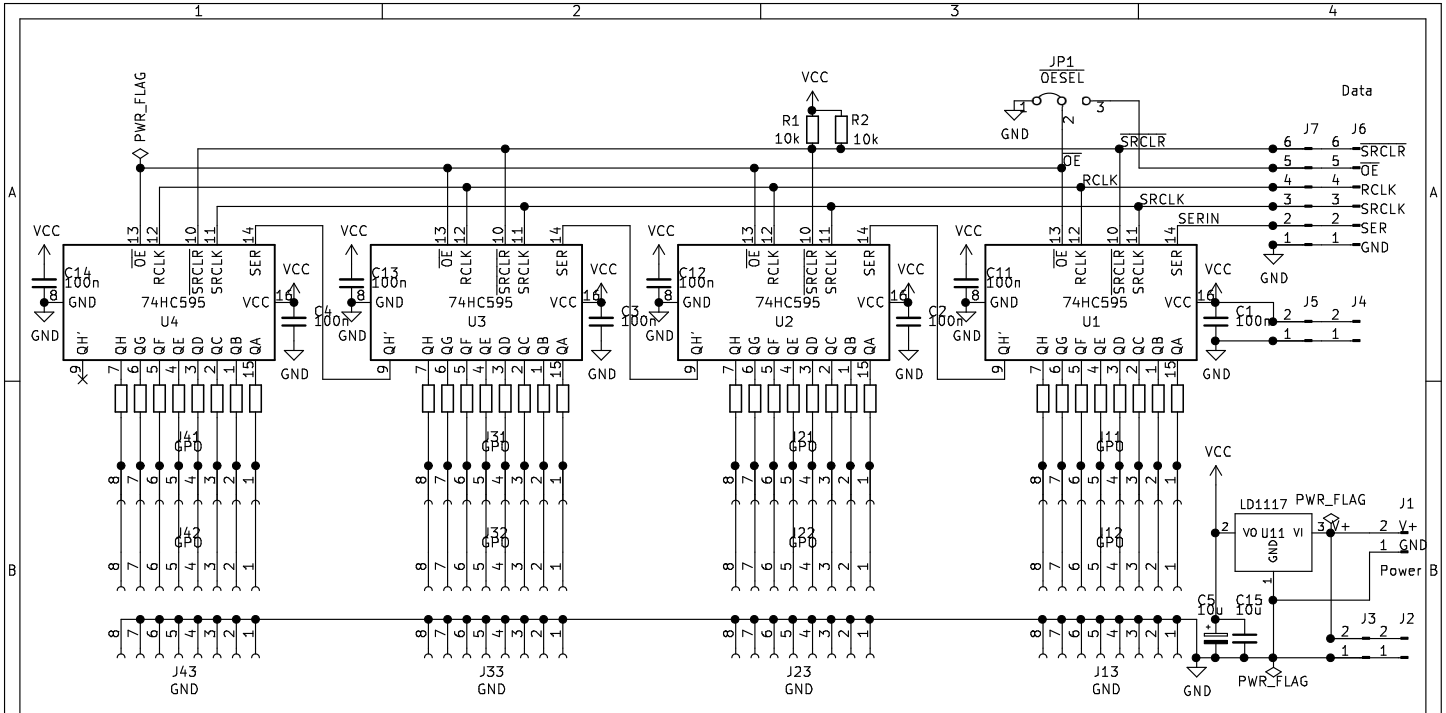

Only one of R1 and R2; Cn and C1n is required.
Two components are to get footprints for
THT and SMD parts.

Sheet: /
File: sr32gpo.sch

Title: Shift register 32-bit general purpose output

Size: User	Date: 2022-01-24	Rev:
KiCad E.D.A. kicad 5.1.12-5.1.12		Id: 1/1