CLEARWAY

USER GUIDE

Issue: 7
Date: October 1984

REAL TIME DEVELOPMENTS LIMITED
Lynchford House, Lynchford Lane
FARNBOROUGH, Hampshire
GU14 6JA ENGLAND
Tel: Farnborough (0252) 546213
Telex Number: 858893 FLETEL G

CONTENTS

		Page
	HOW TO USE THIS GUIDE	
1.	INTRODUCTION	
1.1	What is CLEARWAY?	1
1.2	What can I connect to CLEARWAY?	1
1.3	How CLEARWAY works	2
2.	A BRIEF INTRODUCTION TO DATA COMMUNICATIONS	3
2.1	Node Address - How CLEARWAY Nodes Talk To One Another	3
2.2	The RS232 Standard	4
2.2.1	DCE and DTE	4
2.2.2	Flow Control	7
2.2.3	Physical Pin Numbers	8
2.2.4	Parity and Baud Rate	9
2.2.4.1	Parity	9
2.2.4.2	Baud Rate	10
3.	SETTING UP YOUR CLEARWAY SYSTEM	13
3.1	Testing and Installing the Nodes	15
3.1.1	Self-testing the CLEARWAY Units	15
3.2	First Connections	15
3.2.1	Making First Contact	16
3.2.2	The Loop-Back Test	19
3.2.3	A Simple Ring Test	21
3.3	Connecting up the Ring	22
3.3.1	Direct and Extended Rings	22
3.3.2	Setting up a Small Ring	22
3.3.3	Setting up an Extended Ring	23
3.4	Preparing a Ring Diagram	24
4.	LOCAL DEVICE CONNECTION	26
4.1	Installing Local Devices	26
4.2	Node Label	27
4.2.1	The Style String	30
4.2.2	Public Addresing and Cross Addressing	31
4.2.3	Reset and Timeout	32
4.2.3.1	Reset	32
4.2.3.2	Timeouts	33
4.2.4	Node Lock Options	34
4.2.5	Interacting With The Label	35
4.2.5.1	How to Edit the Node Label	35
4.3	Hunting Mode	37
4.3.1	How To Select Hunting Mode	37
4.4	Network Switching Under Computer Control	38
4.5	Cable Set Configurations	38

		Page
4.6	General Example	40
4.6.1	Word Processing	40
4.6.2	Accounting	41
4.6.3	Program Development - Micros	41
4.6.4	Program Development - Minicomputers	42
4.6.5	Prestel	43
4.7	Earlier Versions of CLEARWAY	43
5.	THE STATUS INDICATOR	46
5.1	Idle Status	46
5.2	Busy	46
5.3	Idle/Destination In Use	46
5.4	Busy/Destination In Use	46
5.5	Holding	48
5.6	Busy, Data Lost	48
5.7	Illegal Destination	48
5.8	Unknown Destination	49
5.9	Ring Failed	49
5.10	Ring Failed - Not Receiving	49
6.	OPTIONS AND PACKAGES	50
6.1	Timeout Values	50
6.2	2-Character Reset	50
6.3	Further Options	50
6.4	Software Packages	50
6.5	Fileserver	51
APPENDIX A - THE CLEARWAY RANGE		52
A.1	The Multiplexors	53
A.2	Model R - The 19"-Rack-Mounting Version	55
A.2.1	Rack Software Differences	57
APPENDIX B - SUMMARY		58
B.1	Node Label	58
B.1.1	Link Address	59
B.1.2	Node Lock	59
B.1.3	Baud In/Baud Out	60
B.1.4	Flow In/Flow Out	60
B.1.5	Parity	60
B.1.6	Node Address	60
B.1.7	State Switch	61
B.1.8	Node Name	61
B.1.9	Status Report	61
B.1.10	Ring Fail Indicator	62
B.1.11	Prompt	62

		Page
B.2	Status Codes	63
B.3	Pin Connections	64
B.4	Points Worth Noting	64
B.4.1	Configuration	64
B.4.2	Communication Mode	64
B.4.3	Node Lock	65
B.4.4	Hunting Mode	65
B.4.5	XON/XOFF and DTR Protocols	65
B.4.6	BREAK Condition	65
B.5	Suggested Cable Sets	66

HOW TO USE THIS GUIDE

Congratulations on the purchase of your CLEARWAY system. If you are already a CLEARWAY user then much of the information in this Guide will already be familiar. However, unless you have seen this issue of the Guide before, we strongly advise you to read it through. Certain features are described of which you may not be aware. The paragraphs below tell you how to find the information you require, to reduce the amount of reading you have to do.

Section 1 contains an overview of CLEARWAY; what it is and what it does. This is aimed primarily at new users.

Section 2 provides a brief introduction to the subject of data communications, describing in general terms how CLEARWAY "talks" to other machines, and defining some of the technical terms used elsewhere in this Guide. This section can be skipped if you are familiar with communications terminology or have used CLEARWAY before.

In Section 3 the procedure for setting up your CLEARWAY system is discussed. It tells you how to set up the Ring and how to connect Nodes to the Ring and to computers and peripherals. It also tells you what you can and cannot attach to the CLEARWAY network. If you are merely adding new Nodes to an existing Ring using familiar equipment then you need not read this section.

Section 4 covers the procedure for configuring your individual CLEARWAY Node. It describes all the possible user-configurable options and explains what the set-up dialogue is all about.

Section 5 describes the Status Indicator, and how it tells you what is happening on the Ring and inside your CLEARWAY Node. As some of the signals change from time to time it is recommended that all CLEARWAY users should read this section.

If your CLEARWAY doesn't quite match up to your particular requirement, there are a number of user-specifiable options available which can be incorporated into CLEARWAY prior to delivery. Section 6 describes how you can use these options to tailor your CLEARWAY to your own needs. There is also a description of available software packages which can be used to support your CLEARWAY system. Don't skip this section; it could contain the exact information you're looking for.

CLEARWAY not only offers the solution to the most simple communications problems, but can cope with more complex situations. Appendix A describes the full range of other CLEARWAY models to cover a wide range of applications and it is important that all CLEARWAY users should read this section.

Finally there is a summary of the information contained in the body of this document, together with a few tables of data which may be of interest, in Appendix B. This provides a quick reference to information covered in detail elsewhere in the Guide, as well as certain points to watch for when using CLEARWAY. If you have any comments on CLEARWAY or this manual which you think may be useful in helping us to provide a better service, please let us know.

Thank you again for choosing CLEARWAY. We hope that we can add you to the list of our many hundreds of satisfied customers.

Note: Although every effort is made to ensure accuracy, neither Real Time Developments Limited nor any of its dealers can be held responsible for damage to a User's equipment resulting directly or indirectly from the use of this Guide.

1. INTRODUCTION

Before we can explain how to use your CLEARWAY, there are a few points which need to be discussed, to give you a full understanding of what CLEARWAY can do. Firstly,

1.1 What is CLEARWAY?

CLEARWAY is a system which permits a number of computers, terminals, printers and other peripherals to communicate with one another within a geographically-restricted area. Such systems are called Local Area Networks, or LANs for short.

What do we mean by "CLEARWAY"?

The term CLEARWAY refers to the complete system, comprising two or more "white boxes" (or "Nodes") connected together via the "Ring" of cable.

What can CLEARWAY do?

CLEARWAY can connect together up to 99 different computers, terminals, printers or similar "devices", allowing information to be exchanged between them freely and efficiently. The sole requirement is that each device has an RS-232 interface.

The terms used above are defined in Section 1.3 (page 2).

1.2 What can I connect to CLEARWAY?

The various devices you will be connecting by way of the CLEARWAY Ring will need to have one thing in common; the RS-232 interface. This is the most popular standard for data interchange on modern computers and peripherals, and as long as your devices share this standard they are equipped for connection to the Ring.

In fact it is often possible to join RS-232 interfaces directly without CLEARWAY's help. However with CLEARWAY you get the following advantages:

i) The many differences in the way the various devices use the RS-232 interface are smoothed out by CLEARWAY.

ii) Interconnections between the devices can be altered by sending simple instructions to the Nodes. You don't have to resolder connections or juggle cables around.

iii) Devices like printers that simply receive data can be made permanently available to all or any of the transmitting devices on the Ring. No confusion arises from several transmitting devices trying to use the same receiving device at the same time because CLEARWAY controls access simply and intelligently.

1.3 How CLEARWAY Works

To set up and use the CLEARWAY System you first need to be aware of the following definitions:

Serial Device: (or often simply "device"). This can be a printer, a plotter, a terminal or a computer; in fact any machine that can communicate through an RS-232 serial interface. The term "local device" refers to the single device connected to a particular Node.

CLEARWAY Node: Also referred to as a CLEARWAY Unit, or just as "a Node". This is the "white box" housing a dedicated Z80 microcomputer that communicates between its local serial device and the Ring.

The Ring: The Ring is literally a closed loop of coaxial cable through which the CLEARWAY units communicate with one another. This is installed around the whole area where your devices are operating.

Each CLEARWAY Node has two "faces", one looking towards the local device, and the other turned towards the Ring. The Nodes are in fact dedicated Z80 computers that handle the business of converting RS-232 signals to Ring protocol, and vice versa, as well as speeding the orderly traffic around the Ring.

Many different devices can use the Ring simultaneously because CLEARWAY keeps data separate by wrapping it into individual "packets", each one of which is addressed to the correct destination Node. The receiving Node runs a check on the extra bytes added to make sure the data has been received correctly, and then sends an acknowledgement back round the Ring. This means that if data should happen to be corrupted in transmission, it can be re-transmitted quickly without interruption.

All this happens "transparently" to the serial devices; that is they are unaware that CLEARWAY is connecting them together. As far as each pair of communicating devices is concerned it is as though they were just connected by an ordinary cable (albeit a very clever and sophisticated cable!)

2. A BRIEF INTRODUCTION TO DATA COMMUNICATIONS

2.1 Node Addresses - How CLEARWAY Nodes Talk To One Another

As we said in Section 1, CLEARWAY provides "transparent" RS-232 communications between any two machines which are connected to Nodes in the Ring. To achieve this, each Node has a unique number or "address" associated with it. To establish a link to a machine connected to a particular CLEARWAY Node, all you have to do is tell your own Node the number of the unit with which you wish to communicate. This is done by a simple configuration exercise.

To illustrate the principle involved, it is best to imagine a private telephone exchange comprising a number of different extensions, as found in most offices. Each telephone has a unique number, which for the sake of argument we will assume is in the range 1 to 99. If Mr. Smith on extension 27 wants to talk to Mr. Jones on extension 42, he will dial (or punch in) the number 42 on his telephone. If he hears the engaged tone he knows that Mr. Jones is busy, and may wish to either wait or address his enquiry to Mr. Brown on extension 45 instead. If the "number unobtainable" tone is heard, he will assume that he has the wrong number and that the number he has dialled does not exist. If however, the phone is answered within a short period the conversation can then take place as if Messrs. Smith and Jones were in the same room.

As you are probably aware, many modern office telephones have a "re-dial" facility. That is they record the last number dialled and can call it again at the press of a button. CLEARWAY has a similar facility.

In fact you can directly compare the role of CLEARWAY in data communication with that of the modern day telephone in speech communication.

When the user of the computer attached to CLEARWAY Node number 27 wants to send data to the printer connected to Node number 42 he merely changes the address code held within his CLEARWAY Node to 42. This is equivalent to someone programming an autodial telephone. The user's "Local" CLEARWAY is number 27, and he wants to "Link" to the printer attached to Node number 42.

The CLEARWAY Node then checks to see if Node 42 is available, by "dialling" the number 42 and seeing what sort of reply it gets. If it receives no answer within a defined period it assumes that unit 42 is not connected (equivalent to "number unobtainable"). Alternatively, Node number 42 may be in use "talking" to another CLEARWAY unit (equivalent to "engaged"). These conditions are communicated to the user by the Status Indicator on the Node's front panel. Likewise, if someone has "pulled the plug" on the whole network, an indication that the Ring has failed is also displayed

Assuming that communication is established with unit 42, and no-one else is currently "talking" to it, unit 27 can now send information to unit 42 at any time. The "Line" between the two Nodes is now "dedicated". There are a number of options open to the user, which are described in detail later in this document, allowing temporary or "permanent" connection between the two Nodes. However, suffice it to say that once this connection has been set up, data can flow between the two units at any time, be it 10 seconds or 10 weeks after this single set up procedure. In other words, until the user specifies otherwise, whenever his computer "talks" through its communication port, it is "talking" (through CLEARWAY) to the printer, just as if the printer were plugged directly into the computer. It is not necessary to set up the CLEARWAY Node again unless a different destination is required.

2.2 The RS-232 Standard

RS-232 (or more properly RS-232C) is a Recommended Standard for data communications laid down by the American Electrical Industries Association (EIA). It is very closely linked with the V24 standard put forward by the European CCITT, and defines certain rules for electrical connection and data traffic between certain machines, over certain lines.

The electrical details of the RS-232 standard are not important as far as we are concerned. However, to avoid some of the pitfalls facing the first-time user of CLEARWAY (or any other communications equipment for that matter) it is necessary to explain some of the concepts behind the Standard.

2.2.1 DCE and DTE

The standard "D-type" connector (so called because of its shape) which is used for almost all RS-232 interconnection has 25 numbered pins or sockets. (Connectors with pins are referred to as "male" and ones with sockets are called "female"). Male and female connectors are numbered in such a way that when connected together pin 1 will always fit into socket 1, pin 2 into socket 2 etc. (See Figure 2.1, page 5).

Now, imagine we are to connect two RS-232 devices together. Lets start with a terminal and a minicomputer, as in Figure 2.2 on page 5.

If our terminal has a male connector on the back, (A) and our minicomputer has a female connector (D), clearly our cable will need to be female at the terminal end (B) and male at the computer end (C), so that it can plug-in. Now assume that we connect all 25 lines; that is we connect a wire between socket 1 on connector B and pin 1 on connector C, socket 2 on B to pin 2 on C, etc. (This is a standard "straight" RS-232 cable). See Figure 2.2, page 5.

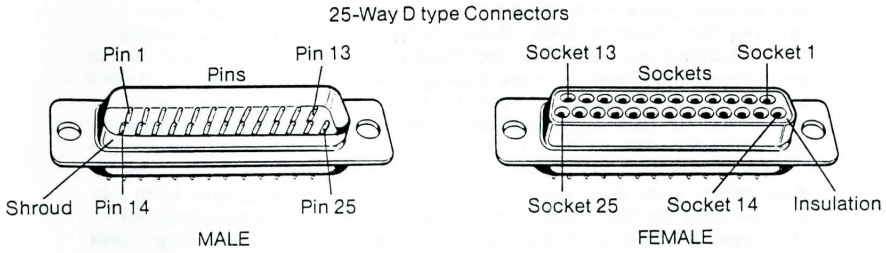

Figure 2.1 – Front view of D-type Connectors for RS-232 Devices

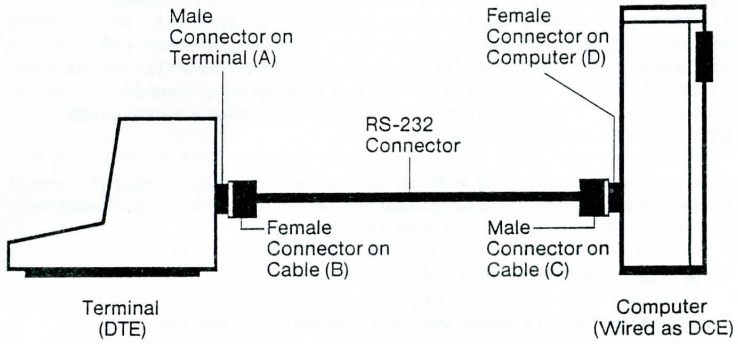

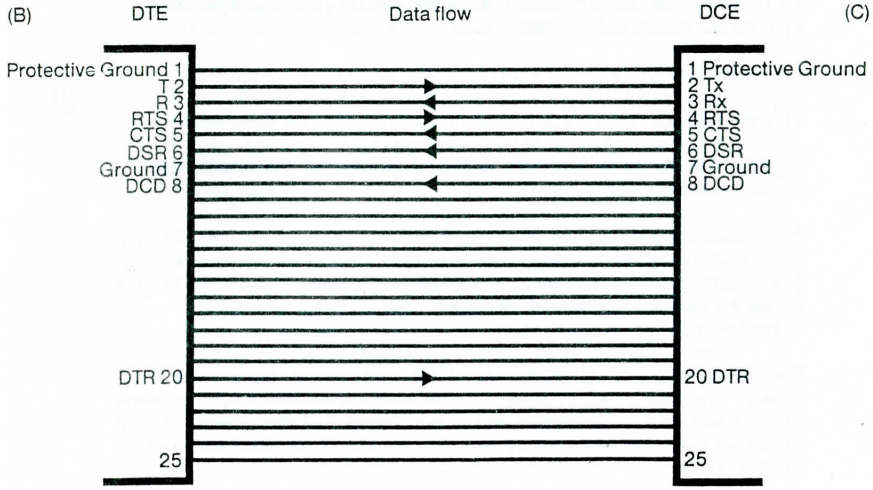

Figure 2.2 – DTE to DCE Cabling

One of the lines (pin/socket 2) is defined as the one that carries the "Transmitted" data (Tx), and another (pin/socket 3) is defined as carrying the "Received" data (Rx). Now if you connect a piece of wire between two points and start transmitting electrical signals along it, clearly what is put in at one end will appear at the other, more or less as it was sent.

That means that data leaving the terminal along line 2 will be received on the computer's socket 2, and data received by the terminal on pin 3 will have been sent by the computer from its socket 3. But that means that the computer has got its connections the wrong way around! It "Receives" its data on socket 2 and "Transmits" on socket 3.

RS-232 resolves this apparent problem by defining two types of equipment. These are called Data Terminal Equipment (commonly terminals, printers, most microcomputers, etc.) which usually have male connectors, and Data Communications Equipment (modems, some minicomputers, etc. sometimes also referred to as 'Data Sets') which usually have female connectors. These are commonly known by the abbreviations DTE and DCE respectively.

The concept of DTE and DCE is not an easy one to grasp, since the connectors are given the same names at both ends; but clearly the functions are reversed.

As a simple rule:-

In DTE the Tx line carries data Transmitted To the other end.

In DCE the Tx line carries data Transmitted From the other end (i.e. Received by this unit).

Likewise

In DTE the Rx line carries data Received From the other end

In DCE the Rx line carries data Received By the other end (i.e. Transmitted by this unit).

The "usual" connectors stated above are for guidance only. Some manufacturers ignore this simple rule, making life difficult for you and me. (One make of plotter has two female connectors, one labelled "MODEM", the other labelled "TERMINAL").

The rules are not always obeyed as far as the equipment itself is concerned. Most micros are wired as DTE, but some others are DCE. CLEARWAY sticks closely to the standard; as it is communications equipment it is wired as DCE and has a female connector.

Transmitted and Received data are only 2 of the 25 lines in RS-232. In practice only about 8 are used in most applications and these are described at greater length in Section 4 and below.

In an RS-232 cable, each wire is unidirectional, i.e. data is only ever transmitted from (or "asserted by") one end and is always received at the opposite end. Because of this, data can flow in both directions simultaneously over the cable (and often does in "full duplex" operation) because each machine transmits on one line and receives on another.

2.2.2 Flow Control

Receiving devices often operate slower than sending devices, as in the case of a printer coping with the fast stream of characters sent by a computer. The speed of output is governed by the mechanics of the printer, although the printer may well be capable of receiving characters faster than it can print them. With no way of telling the sending device to wait while it catches up, the printer is liable to lose characters, making the printout unreadable.

The process of sending back information to stop and start the transmission of data is called data flow control, or "handshaking". There are three main handshaking techniques:

i) In addition to the Rx and Tx lines a separate wire is reserved for handshaking. The receiving device changes the voltage on this wire to let the sending device know when it is time to pause. The sending device of course has to monitor this wire to detect the signal. This approach, using hardware, is called hard handshaking, or "DTR protocol" from the name given to the line often used ("Data Terminal Ready").

ii) Instead of using an additional wire the device receiving the data uses its Tx line to send back special characters that are read as "send" and "don't send" codes. This method is often referred to as "XON/XOFF" protocol, meaning "Transmit-on"/ "Transmit-off".

iii) A third possibility is that each device sends blocks of data, followed by an "ETX" (End of Transmission) character. The receiving device then acknowledges receipt by sending an "ACK" (Acknowledge) when it is ready to accept more data. This method of flow-control is referred to as ETX/ACK protocol. Note that this protocol only stops data from being lost if the blocks of data sent are smaller than the maximum number of characters each device can handle at a time.

CLEARWAY actively supports protocols i) and ii), and permits iii) because it is transparent. Note that hard-handshaking and XON/XOFF can be implemented by the hardware of a machine; ETX/ACK needs extra software in the attached devices.

2.2.3 Physical Line Numbers

The potential complexity of the RS-232 interface is simplified with CLEARWAY because only nine of the 25 lines are relevant to its operation. Another simplification is that CLEARWAY Nodes always operate as DCE. They serve their local devices, leaving it to them to define the function of the transmission lines. To a CLEARWAY unit the line it receives data on is the Tx line, because that is the line the local device chooses to transmit on.

These are the connections as CLEARWAY understands them:

Figure 2.3 Physical Line Numbers

Line	Direction	Signal Name	
1		Chassis Ground	
2	to CLEARWAY	Transmitted Data	(TxD)
3	from CLEARWAY	Received Data	(RxD)
4	to CLEARWAY	Request to Send	(RTS)
5	from CLEARWAY	Clear to Send	(CTS)
6	from CLEARWAY	Data Set Ready	(DSR)
7		Signal Ground	
8	from CLEARWAY	Data Carrier Detect	(DCD)
20	to CLEARWAY	Data Terminal Ready	(DTR)

2.2.4 Parity and Baud Rate

The smallest unit of data in a computer is a "bit", physically implemented either as a single memory cell, a miniscule section of magnetic medium or as a voltage on a communications line. The word is a compression of the phrase "binary digit" meaning that it can hold one of two values, usually thought of as 0 and 1.

2.2.4.1 Parity

Conventional character coding as used in text storage and transmission only requires 7 bits to define a character, although microcomputers pass data in sets of eight bits, called bytes (short for "by-eight"). It is common practice to treat the unused highest bit in each byte as a sort of watchdog over the others, making sure it is set to "0" or "1" depending on the parity (either odd or even) of the number of "1" bits in the transmitted character. There are two ways this checking mechanism can be organised, and these are known as Odd parity and Even parity. (See Figure 2.4, page 11).

Alternatively a device might conventionally expect this high bit always to be set or reset. This too is loosely called "parity", and for historical reasons the two versions of this approach are known as Mark Parity (top bit set to "1") and Space Parity (top bit set to "0").

If a local device is expecting to receive data that conforms to any of the above parity schemes, the CLEARWAY Node serving that device can be set up to deliver its bytes accordingly. Notice that CLEARWAY does not use parity internally. It doesn't need to - it has its own validity checks.

CLEARWAY can also respond to situations where the most significant bit is not used for parity, but is part of the value being sent. The ability to pass all eight bits of a byte unchanged is essential where that which is being transmitted is not text but program code or non-text data that makes use of all eight bits.

2.2.4.2 Baud Rate

The sort of data transmission we are discussing here is called "serial" because each bit of the byte is sent sequentially down the line. In practical terms this means that the line voltage is momentarily driven up or down to signal each bit as 0 or 1. (See Figure 2.5, page 12).

In order for meaning to be conveyed by these fluctuating voltages it is important that both ends of the line agree about the speed at which the fluctuations are to be written and read. This characteristic of data transmission, known as the "baud rate" is something else that CLEARWAY has to take into account in its communication with the Local device.

There is a range of "standard" baud rates and CLEARWAY supports all the most common ones. A list is given in Figure 4.2, page 36. Other "non-standard" baud rates can be supported on request. (See Section 6).

For further information on RS-232, we recommend you refer to "RS-232 Made Easy", by Martin D. Seyer, published by Prentice-Hall.

Figure 2.4 - Parity

7-bit number	"ones"	"zeros"	Parity of 7-bit number
0100110	3	4	Odd
0010001	2	5	Even
1101111	6	1	Even
1111111	7	0	Odd

To make the above numbers all EVEN Parity, the 8th bit must be set (1) or cleared (0) so that the sum of all the "ones" is an EVEN number. e.g.

7-bit number	"ones"	Parity of 7-bit number	8-bit number (EVEN Parity)
0100110	3	Odd	10100110
0010001	2	Even	00010001
1101111	6	Even	01101111
1111111	7	Odd	11111111

To make the 7-bit numbers into 8-bit ODD Parity codes, the 8th bit must be set or cleared so that the sum of all the "ones" is an ODD number. e.g.

7-bit number	"ones"	Parity of 7-bit number	8-bit number (ODD Parity)
0100110	3	Odd	00100110
0010001	2	Even	10010001
1101111	6	Even	11101111
1111111	7	Odd	01111111

In MARK Parity bit 8 is always a "1". In SPACE Parity bit 8 is always a "0".

To summarise:-

7-bit number	EVEN Parity	ODD Parity	MARK Parity	SPACE Parity
0100110	10100110	00100110	10100110	00100110
0010001	00010001	10010001	10010001	00010001
1101111	01101111	11101111	11101111	01101111
1111111	11111111	01111111	11111111	01111111

Note: The top bit, when used for parity, is "stripped off" by the receiving device, so it never interferes with the actual data value. However, if pure binary is being transmitted, using all 8 bits, parity should not (and indeed cannot) be used.

How Asynchronous Data is Sent

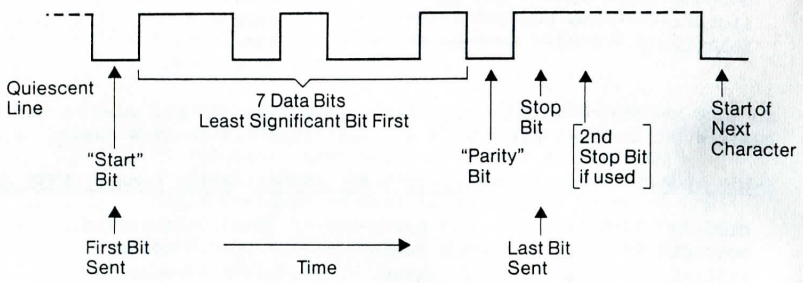

How Asynchronous Data is Read

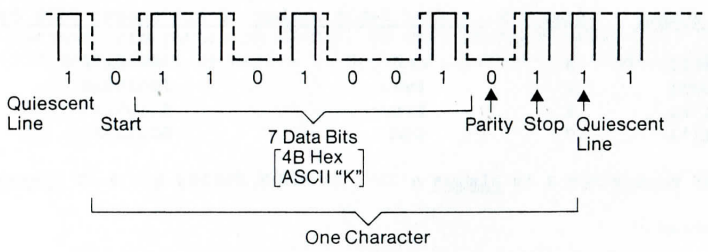

Multiple Character Sequence

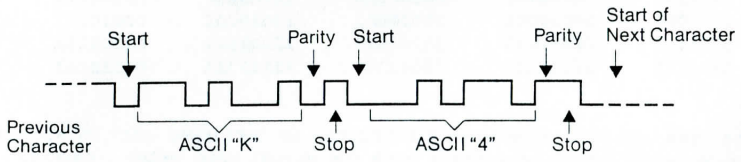

Each character is preceded by a Binary "0", the "Start" bit. (This effectively says "here is a character"). After the last data bit there is a binary "1", denoting "end of character". This is called the "Stop" bit. More than one may be used.

The receiving device looks at the line voltage at regular intervals (if set for 9600 baud it looks 9600 times per second).

(Although conventionally shown with "1" as "High" and "0" as "Low", a negative voltage usually denotes "1" and a positive voltage "0".) When no data is flowing (quiescent) the line is at a binary "1" state.

Figure 2.5 – Digital Transmission

3. SETTING UP YOUR CLEARWAY SYSTEM

This section tells you how to check your CLEARWAY Nodes after unpacking, how to connect them into a Direct Ring and how to configure the Nodes for a basic operation. Installation of an Extended Ring is covered at the end of this section and the more advanced features are discussed in Section 4.

First a few more definitions:

Direct Ring: For installation in a single room the direct version of the Ring may be enough. Using only the 3 metre lead that comes with each CLEARWAY unit you simply daisy-chain the Nodes together by inserting the jackplug of one into the socket of the next until the Ring is completed. (See Figure 3.1, page 14).

Extended Ring: In the extended version Nodes are plugged into a permanently installed Ring formed from "tadpoles" (see below). The extended Ring itself is, as the name implies, simply an extension of the direct Ring. It merely consists of wire that carries signals, all the necessary processing being carried out by the Nodes connected to it. Nodes leading directly off the extended Ring can be used to connect further Nodes, creating a spur.

Tadpoles: "Tadpoles" are the pre-wired junction box modules that you will assemble to set up the extended version of the Ring. Each "tadpole" comprises a jack socket with a length of coaxial cable attached. (See Figure 3.2, page 17).

Node State: At any time a Node may be in either of two states, selected by the user. These are called the Control State and the Communication State.

Control State: This is the condition created by sending the State Switch code (see Section 4) or pressing the red button. In this state the Node effectively disconnects from the Ring and communicates directly with the local device attached to its RS-232 port. The Control State is used to set up or alter the Node Label (see below).

Communication State: This is the normal operating condition of the Node in which it becomes transparent to its local device, connecting it directly into the Ring.

Node Label: Each Node can be allocated a label by the user that identifies it and carries additional information governing how it will function in the communication state. The Label is retained in the Node's battery-backed memory even if the Node is switched off. The elements that make up this Node Label are described in detail in Section 4.

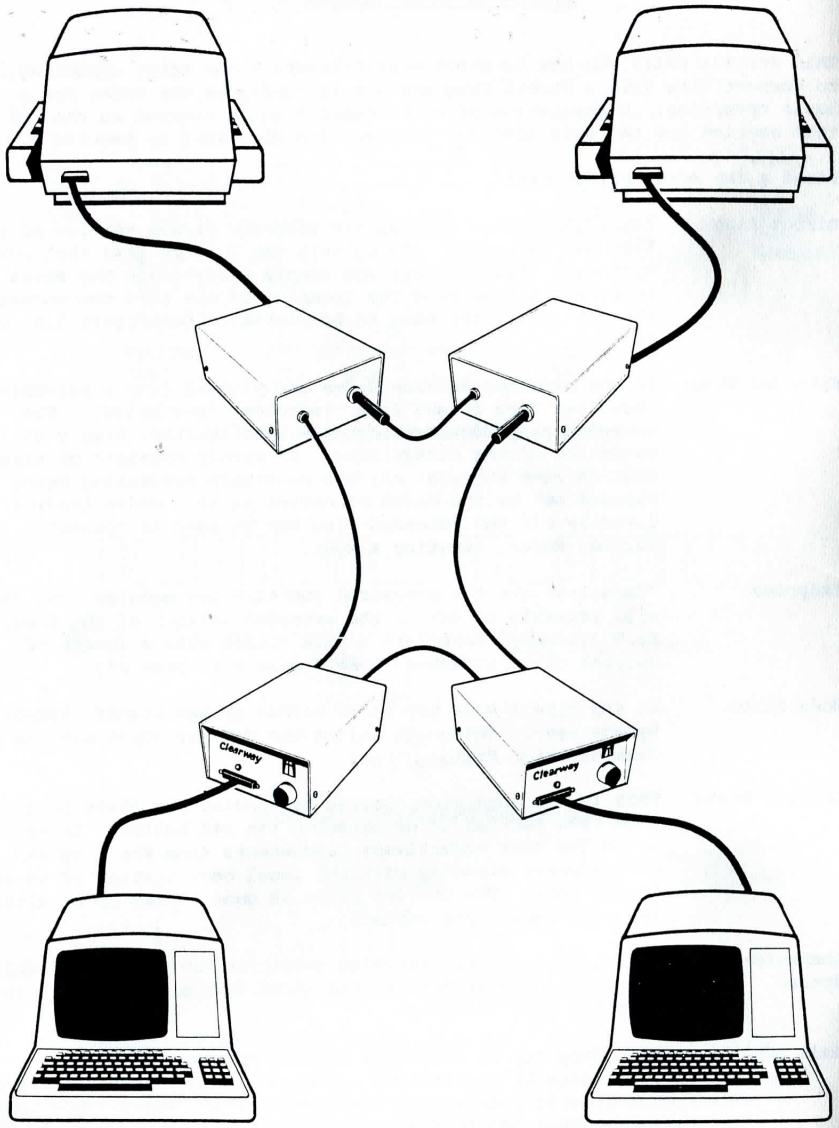

Figure 3.1 – A Direct Ring

Whichever Ring you intend to use, read the remainder of this section and then test your CLEARWAY Nodes in a direct Ring configuration. This will help you to familiarise yourself with how CLEARWAY operates before you try to install an extended Ring. If anything goes wrong during installation it will be much easier to find the fault if you know what to expect.

3.1 Testing and Installing the Nodes

Before you can use a new CLEARWAY Node you will need to set it into operation in conjunction with your terminal equipment and the Ring. In particular you will need to establish its Node Label and ensure it is working harmoniously with the local device it is to serve.

3.1.1 Self-testing the CLEARWAY Units

The first thing to do with a new Node is to power it up with no local device attached and with its jack plug inserted into its own socket. The red LED on the front panel should come on, and you should hear a slight click as an internal relay engages. About two seconds later the red light should go off, and then start flashing on and off once every 3 seconds.

If the light does not come on at all, or if it comes on and stays on without flashing, press the red button. This ought to set the Node into the control state, indicated by the red LED beginning to flash at a faster rate than can be counted. If pressing the reset button doesn't produce this condition your Node has a fault, so you should disconnect it from the mains power and contact your supplier or the manufacturer immediately.

3.2 First Connections

The types of device which your CLEARWAY Nodes will serve fall into four categories.

i) Bidirectional display terminals (VDUs) or printing terminals ("teletypes").

ii) Computer ports.

iii) Receive-only printers or similar output devices.

iv) Modems and other communications equipment.

You will find it easier to set up your CLEARWAY Node using the first class of device; i.e. a VDU or teletype. If you only have a micro with built-in VDU which cannot be used as a simple VDU, you will need to use a VDU-emulator. Several such packages exist, and are usually obtainable from the equipment manufacturer.

It is to be noted that the device you are using is wired as DTE (see Section 2) and has a male 25-way D-type connector. If so, a simple off-the-shelf male-to-female RS-232 cable with at least 3 lines connected should be suitable for connection to CLEARWAY. Such cables can be purchased from most computer shops and electronic stockists or alternatively you can make one up yourself, following the diagram in Section 4 and the summary at the end of this Guide.

If you have a device which has a female connector, try to establish whether it is wired as DCE or DTE. If this is not described in the documentation, and the details cannot be obtained from the supplier of the equipment, a simple test with a voltmeter will establish the type of equipment you have. Using a meter capable of measuring voltages in the range +25V to -25V DC, connect the Common (usually black) probe of the meter to pin/socket 7 on the equipment. Now connect the positive (usually red) probe to line 2. If a negative voltage is detected the equipment is DTE. If the equipment is DCE a negative voltage will be found on line 3 instead of line 2. Once this is established make up a cable as described in the appropriate diagram in Figure 4.5, page 39 ('Cable Sets'). A cable used for connecting between your device and a modem or other machine wired as DCE may well suffice, but first ensure that at least the connections shown in Figure 4.5 on page 39 have been made.

It is fair to say that over 90% of the problems encountered by people setting-up CLEARWAY for the first time are due to RS-232 cabling or the device connected to CLEARWAY. Consequently, if it doesn't work first time, check your cable makes the correct connections! All the common cable connections are given in Figure 4.5, page 39, under the heading "Cable Set Configurations". (See also Appendix B for specific machines and special cables).

Use the cable to link your terminal to the CLEARWAY Node and power up the Node and the local device. Press the red button and strike the "Return" or "Enter" key on your terminal. (The character that should be transmitted is 0D Hex, or 13 Decimal). If all goes well you will get a line of print-out on the display indicating that you have managed to make contact with CLEARWAY. If this is the case, you can now skip to Section 3.2.2, remembering to return here if you have any problems communicating with CLEARWAY in the future. If you don't have anything on your screen, read on.

3.2.1 Making First Contact

If the terminal you are using registers no reply from the Node at first there are three likely reasons:

i) It could well be that your terminal is monitoring one of the lines as yet unconnected, expecting to detect a voltage indicating that it is connected to a communications device. Often a local device will refuse to enter into communication until it detects this voltage.

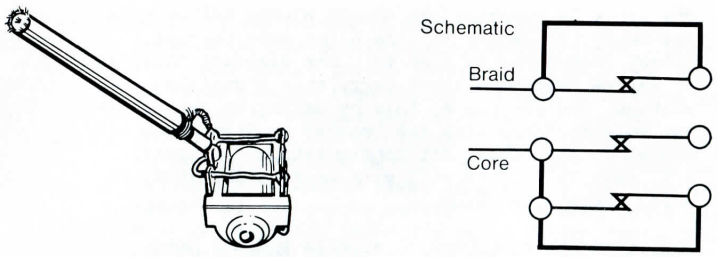

Figure 3.2 – A "Tadpole"

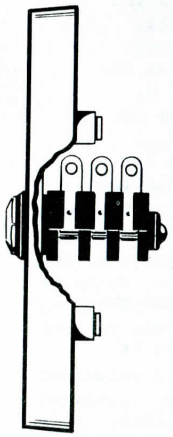

A Jack Socket
(Side View) – Unwired

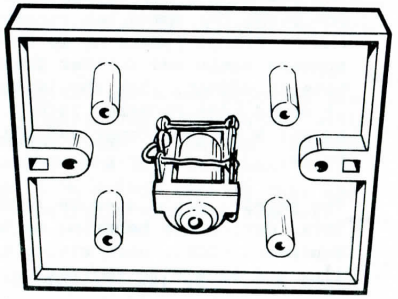

A Jack Socket
(Rear View) – with connections prior to inclusion in Ring

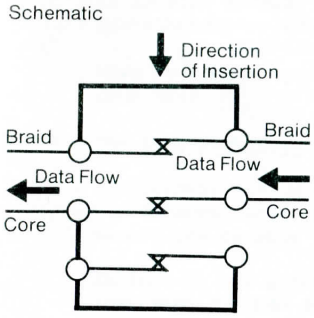

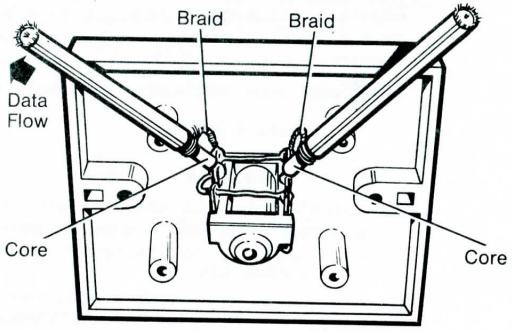

After Connection into Ring

Figure 3.3 – Wiring of Juction Boxes

The lines in question are almost always either Data Set Ready (connected to line 6) or Data Carrier Detect (connected to line 8). The simplest thing is to ensure that both lines carry this signalling voltage, and you can do this by making up your cable set in accordance with the "Modem" configuration listed in the "Cable Set Configurations" (Figure 4.5, page 39). This will work because CLEARWAY holds these lines high.

Note that the Flow Control signals are not used during configuration. If your terminal or terminal emulator cannot cope with the line of characters the Node sends to it in configuration mode it will not be able to use its flow-control method to limit the speed at which the Node is sending. Consequently the configuration message on the screen may appear garbled. If this happens, don't despair! Press the red button and hit RETURN again followed by an N. Now press the space bar repeatedly until the prompt (nn - Y/N/Q) [where nn is the version number] appears again and further presses of the space bar have no effect. You should now have the message as it would have appeared before. To change it, just answer N to the prompt and edit it as described below.

ii) The problem could also be that both CLEARWAY and the local device are behaving as Data Communications Equipment (DCE), each trying to transmit on the Rx line and expecting to receive on the Tx Line.

The simple solution is to swap the Rx and Tx lines in the cable set according to the "Modem" configuration detailed in Figure 4.5, Page 39.

iii) The interface on your terminal is configured to expect a different number of data bits or stop bits, or a different parity setting to CLEARWAY. Each character sent by CLEARWAY is in the following format:-

1 start bit

7 data bits

1 parity bit

1 stop bit

When "Binary" mode (parity setting "B") is used, the "7 data bits and 1 parity bit" are viewed as being 8 data bits.

When the red button is pressed CLEARWAY <u>always</u> reverts to Even parity during configuration. Most terminals ignore parity anyway, and those that don't normally require Even parity. Should your terminal be set up to require any other parity setting, reconfigure it and try again. If it is not possible to reconfigure your device, use another machine to set up your CLEARWAY Node; once set up the Node will always use the parity setting in the Node Label even when reconfigured using the State Switch Character. (See 4.2, page 36). It only forces Even parity when reset using the red button.

If your device requires more than 1 stop bit or a different number of data bits, these features are available as a factory-installed option (although it is quicker and easier to reconfigure the device if possible). To allow interchangeability of Nodes it is wise to specify that all Nodes should run with 2 stop bits even if this option is required on only one machine.

If after checking for and resolving the above problems you have still not succeeded in establishing a connection with CLEARWAY, you have a very unusual terminal device. Perhaps you have another terminal device of a different kind handy - in which case the best thing is to switch over to that and go through the process again, starting with the simplest sort of cable set.

Otherwise try reading the user manual that goes with your terminal. You may come across some hidden information that will clear up the problem.

Equally of course, you may not.

If you've gone this far and still cannot get CLEARWAY going it is time to call for help from your local CLEARWAY distributor, or from the manufacturer.

When you get a response from your CLEARWAY Node, continue from here.

3.2.2 <u>The Loop-Back Test</u>

A correctly set up connection between the local device and the CLEARWAY Node operates in both directions, and you should now be able to send characters to the Node.

In fact it has already received a character from you - the "carriage return" you sent in order to get it to respond. The CLEARWAY unit has analysed this character, worked out the baud rate you are using, and adapted itself accordingly.

The message now displayed on your terminal will be the configuration information set in the factory. The most likely setting will be something like:-

```
99-9DB9D99A................G00 (nn  - Y/N/Q)
[nn is the 2-digit Version Number]
```

You might have something other than a line of "full-stops", but the first part of the message should be the same.

Just in case the Node has "timed out" while you have been reading this, press the red button again followed by the "RETURN" key on the terminal. The Node Label should be displayed again.

If you have this message, and the terminal you are using is running at 9600 baud, just type "Y". This tells your Node that you accept the current configuration.

If it isn't the same message, or if you are not sure of the baud rate, type "N". The cursor on your screen should now move to a position directly below the first character of the message, inviting you to reconfigure your Node. We will go into the precise meaning of each element in the message in Section 4, but for the present type the following sequence of characters:-

```
99-=DB=D99A................
```

If you make a mistake type "TAB" to step to the prompt again immediately.

You won't see them appear on the screen like this, because the "equals" sign will be translated by your Node into a number. When you've finished, the prompt will automatically appear again. If you typed it in correctly, answer with a "Y". Otherwise type "N" and try again.

Insert the jack plug on the end of the lead into the socket in the back of the Node. This "loops-back" the Node's output into itself. Once your have done this the Status LED on the front panel should start flashing in a slow "On - Off" sequence, repeating about every 3 seconds. If you type characters on the keyboard they should now appear on the screen, since your Node is addressed back to itself and it receives anything it sends. Once you start typing the LED should go out, to show that the Node is 'Busy'.

Congratulations! You have just sent your first data through CLEARWAY.

The Node can now be assumed to be working correctly in combination with its local device, the terminal you have been using for set up. Any other Node you want to put on the Ring will behave similarly to the one you have just successfully configured, so you can use this terminal and cable-set combination to set up all of the other Nodes in your network.

3.2.3 A Simple Ring Test

If a second VDU or printing terminal is available, a further test could be applied to show two or more units working in a Ring. Press the reset button on the unit you have been using and the RETURN key on the keyboard. The configuration message should appear on the screen again. Type "N" and the cursor should move to a position directly below the first character of the string. Now type:

```
98-=DB=D99A................Y
```

(Note that the "=" symbols will be translated into numbers as you type them).

This re-addresses your Node to talk to another Node, number 98.

Connect a second CLEARWAY Node to another VDU and repeat the above process, except this time you should type:

```
99-=DB=D98B................Y
```

Now insert the jack plug of each CLEARWAY Node into the socket of the other.

Type characters on the keyboard of one VDU. They should appear on the screen of the other VDU. Repeat the process the other way round. Type on both keyboards simultaneously. Whatever you type on one keyboard should appear on the screen of the other VDU.

You have now sent messages around a CLEARWAY Ring between two devices. A full explanation of what you were doing when you changed the configuration is given in Section 4. Here, suffice it to say, you have used a Direct Ring, and we will go on now to discuss Direct and Extended Rings. We recommend that you read the rest of this Section, but don't try to install an Extended Ring until you understand the contents of Section 4 and have experimented with a Direct Ring first.

3.3 Connecting up the Ring

If your CLEARWAY network is confined to a relatively restricted area there may be no need to install an Extended Ring. Of course, the system Ring must be completed in order for the Nodes to work, but the simpler Direct Ring will achieve this perfectly well.

A useful starting point when setting up either type of Ring is to draw up a Ring diagram (see 3.3.4). With the Ring set up and working the direction of flow becomes unimportant to the users, but having the flow direction correctly marked on the diagram makes it easier to diagnose faults if and when they arise.

3.3.1 Direct and Extended Rings

The two sorts of Rings you can establish are logically identical and only differ in their physical size. A direct Ring for distributing a few Nodes around a medium sized room will need no more than the cable supplied with each unit. In this case the units can very simply be joined by inserting the plug at the end of the cable of one into the jack socket of the next, and so on, completing the Ring by inserting the last jack plug into the first jack socket. We call this sort of connection "daisy chaining" the units. (See Figure 3.1, page 14).

For the Extended installation you will need to set up a Ring of wall-mounted junction boxes, which are supplied with or without a length of coaxial cable already connected in a configuration called a "tadpole". This "passive" Ring, consisting simply of cable and junction boxes only needs elementary soldering at each junction to make good electrical connection. Once established the CLEARWAY units are plugged into the junction boxes and the Ring goes live.

3.3.2 Setting Up a Small Ring

Except with the very smallest configuration it is still useful to draw a Ring diagram (see Figure 3.4, page 25) as you make the "Daisy Chain" connection. Once the Ring is complete and you have given each Node a correct Label according to the process detailed in Section 4 of the manual you will notice the Status Indicator LEDs on the CLEARWAY front panels are flashing. The status signal code (see Section 5) should indicate that they are "Idle" or Free for Use, which means that they are not being driven by serial devices. In this status the units are continually testing the Ring by sending test communication packages around it. The regular on/off flashing of the LEDs indicates that the Ring is soundly established.

The Ring should now be ready for serial communications.

If for some reason the LEDs are indicating some status other than Idle try pressing all the red reset buttons and waiting a few seconds. If the LEDs continue to send error messages the chances are that your daisy-chaining is not making the right connection. Check that the jack plugs are correctly seated, and that there are no plugs or sockets left over. Also check the Node Labels to ensure that you don't have any duplicates (refer to Section 4).

3.3.3 Setting Up an Extended Ring

Before setting up an Extended Ring read the discussion above of the Direct Ring configuration. In fact it makes a useful test of your CLEARWAY units to set them up in a temporary daisy-chained small Ring.

To wire up an Extended Ring you will need a number of "tadpoles", obtainable from your CLEARWAY dealer, and some simple tools: a screwdriver and a drill to mount the junction boxes on the wall, and a soldering iron to make a proper permanent electrical connection between the tail of one "tadpole" and the head of the next. (A "tadpole" is shown in Figure 3.2, page 17).

"Tadpoles" are available in packs of six, each having ten metres of coaxial cable attached. Our experience shows that ten metres is approximately right for most requirements, since it allows for a four metre separation of boxes, plus about 2 metres for feed from window sill height to ground level and back again, and a further 4 metres spare.

Remember, you only need a junction box where it would be physically convenient to have one or more Nodes operating. You do not need a separate junction box for each Node, since the socket in each Node allows "spur" extensions from a single point.

You should wire the coaxial cable of an adjacent junction box into a junction box as shown in Figure 3.3, page 17. Begin by fitting junction boxes to the walls at suitable points, feeding cable to adjacent junction boxes, trimming cable as necessary and wiring them together so that the last junction box completes the Ring by wiring back to the first.

When connecting Nodes into the Ring, a useful tip is that provided you are not left with an exposed jack plug, you will have completed your Ring. This can be achieved by daisy chaining Nodes together to form a Ring, or by linking together one or more Nodes in a line and connecting the remaining plug into a junction box.

Please Note:- We do not recommend the use of a Ring in which more than 800 metres of cable can exist between active Nodes. (Any Node which is switched on and in Communication Mode is deemed to be active).

3.4 Preparing a Ring Diagram

A Ring Diagram is a useful aid to locating a fault if a Node gives the "Ring-Fail" signal via its LED. An example of such a diagram is shown in Figure 3.4, page 25.

"Tadpoles" carry the data away down their "tails", but this useful direction indicator will be obscured once the extended Ring is installed and all the heads and tails are joined. But a properly prepared Ring diagram, drawn up at the time of installation will indicate the data flow direction. We suggest that before fitting the Ring you prepare a simple plan of your office(s). As each junction box is fitted mark its position on the diagram, draw a line to the next box (not yet fitted) and mark this line with an arrow pointing away from the box just fitted.

Armed with this Ring Diagram, if you get the Ring failure condition all you have to do is locate the Node that is signalling 'Ring Failed - Not Receiving' (continuous flashes). This Node is not receiving any data from the Ring. A quick check that all the jack plugs are fully inserted will probably locate and cure the fault. If not, a diagram similar to that shown in Figure 3.4, page 25 may help.

Note that the direction of the flow around the Ring is marked, with Node 2 "downstream" of Node 1 and so forth. To complete the Ring, Node 1 is "downstream" of Node 8.

The Nodes in Figure 3.4 on page 25 are numbered in the order in which messages are passed around the Ring - thus if Node 6 is giving continuous flashes it is saying that it is not receiving packets from Node 5 (and that the Ring is probably broken between these two Nodes).

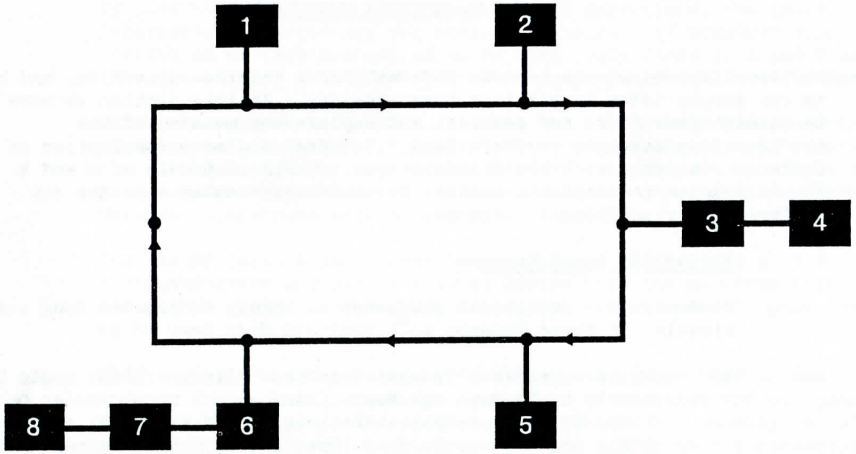

Direction of Flow is: 1-2-3-4-5-6-7-8-1

i.e., The connections look like:

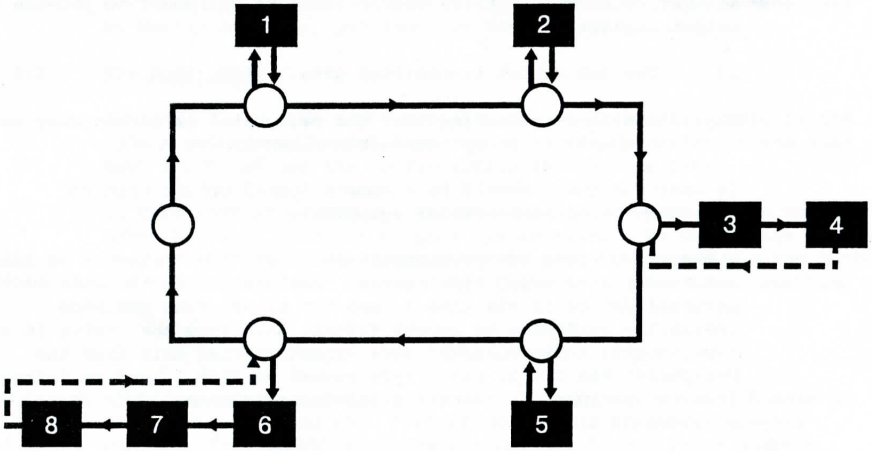

Figure 3.4 – A Ring Diagram

4. LOCAL DEVICE CONNECTION

Section 3 showed how to connect CLEARWAY Nodes together in a Ring, and how to run simple tests to get them communicating. In this section we show how to connect your Nodes and Devices, and explain the meaning of the configuration message, or "Node Label". There is also a description of the features available with the Standard Node. Users of Models B, M and R should examine the separate booklet for their particular Node for any differences or additional features.

4.1 Installing Local Devices

At most, your peripheral equipment is likely to require four input signals, of three types:

i) Up to 2 permanently asserted "true" lines. These would be likely to be Data Set Ready (DSR) and/or Data Carrier Detect (DCD) if your peripheral behaves as a Terminal (i.e. it is DTE), and Request To Send (RTS) and/or Data Terminal Ready (DTR) if your equipment behaves as a modem or dataset (i.e. it is DCE).

ii) One line for serial received data.

iii) One line indicating that the CLEARWAY Node is either busy or ready to accept transmitted data.

At most, CLEARWAY requires your peripheral equipment to provide two output signals:

i) One for serial transmitted data.

ii) One line indicating that the peripheral is either busy or is prepared to accept data from CLEARWAY.

In addition there should be a common Signal Ground (pin 7) interconnecting both sets of equipment.

CLEARWAY provides two permanently asserted "true" signals at lines 6 and 8 of its 25 way D type socket. Data sent from the Node to the attached device is via line 3, and the signal from the Node indicating readiness to accept further data from the device is on line 5 (CTS). The CLEARWAY Node expects serial data from the peripheral via its 25 way D type socket on line 2, and an indication from the peripheral indicating readiness to accept data should be provided on line 20 (DTR).

If hard handshaking is to be used in both directions, the above information is necessary for making up cables. If XON/XOFF flow control or no flow control is to be used, only lines 2, 3 and 7 are likely to figure in the connections between peripheral and CLEARWAY.

Unfortunately, no hard and fast rules can be provided for connection of equipment to CLEARWAY. Understanding or experiment will provide the solution. In our experience, we have discovered that almost all microcomputers, printers and terminals can be linked into a CLEARWAY Network. (Although some more easily than others!)

The IBM PC (with Asynchronous Communications adaptor) is a straightforward example of a local device that can be wired with a "Straight" (Type 1) cable (see Figure 4.5 - "Cable-Sets", page 39), to be used with DTR-type flow control.

DEC terminals can be wired in a similar manner, but tend to use XON/OFF flow control. A large assortment of American VDU equipment tends to use D type socket (female) connectors, but usually can be wired in the same way, simply substituting a plug as the connector on the cable set.

Note that many minicomputers, including DEC and some Hewlett-Packard equipment do not in general support DTR protocols. This means that none of the status signals is asserted.

A list of some of the more common devices and the cable set required for each is provided in Appendix B. A more comprehensive list of American and Japanese equipment can be found in "RS-232 Made Easy" by Martin D. Seyer, published by Prentice-Hall.

4.2 The Node Label

In Section 3 we saw how the configuration information held in the Node's memory can be displayed and altered. We refer to the line of text which defines the configuration as the Node Label.

In this section we examine the meaning of each part of the Node Label and give examples of possible settings. To check this against your own CLEARWAY Node, connect it to your VDU, press the red button and the VDU "RETURN" key, and the Label should now look something like this.

```
98-9DB9D99A...............G00 (nn  - Y/N/Q)
```

("nn" represents a 2-digit number, which is the Version Number of the installed firmware. "00" may also be replaced by another number. The "9DB9D" part may not contain 9s but other numbers instead. All these points are described in detail below.)

So that there's no confusion over which characters we're talking about we've labelled the individual parts of the Node Label below.

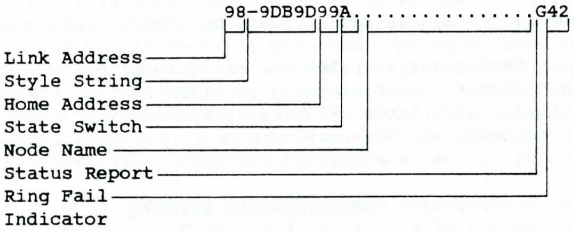

Now let us define what we mean by these names.

Home Address: Every Node on the Ring must have a unique address, established during the Control State. This is what identifies it to each of the other Nodes. (Equivalent to its own "extension number".) This "Home Address" can be any two digit number in the range 01 to 99, but it must be different from any other Node on the Ring. In our case it is set up as 99.

Link Address: At any one time each Node holds in its Label the Home Address of a second Node on the Ring. Two Nodes that hold each others addresses in this way behave as if directly connected, oblivious to other traffic on the Ring, and are said to be "cross-addressed". The connections between Nodes, and hence their local devices, are altered by changing these "Link" addresses. Cross-addressing is the general rule of Ring connection.

Any 2-digit number will be accepted but if there is no Node on the Ring with a corresponding Home Address an "Unknown Destination" (Link not on Ring) error will be signalled by the LED when you try to begin communication. The one exception to this rule is the special address 00. Entering 00 as the Link address establishes that Node as a "Public" Address, unable to initiate communication but able to be called by another Node on the Ring. This would normally be used on shared devices (e.g. printers).

A "Hunting" feature is also available. If the second digit of the Link Address is replaced by an "X", the Home Node will hunt down the first idle "Public" Node in the range indicated by the first digit. For example, by setting a Link Address of 2X, Nodes in the range 20-29 will be hunted. This is particularly useful for an installation where, for example, there are several identical printers shared by a number of users. If one is busy, CLEARWAY will hunt for one that is free. (For a full description of Hunting Mode, see Section 4.3, page 36).

Our Node is initially configured to Link to Node number 98.

Style String: This is a six-character string in the Label that defines how the Node interprets the RS-232 conventions in its communications with the local device. The Style String also includes a software switch called the Node Lock that decides whether the Node will release itself from its Link Address when communication stops. The Style String is described in detail in Section 4.2.1, page 30.

State Switch: This character indicates the control code that you may use to switch the Node from Communication State to Control State. For example, if you enter an A in this position, the Node will switch out of Communication State when it detects a Control-A in the data stream. An asterisk in this field is used to symbolise the "BREAK" condition as the State Switch. (i.e. the BREAK key is used. The effect of this is to pull the Tx data line low for a period of half a second or more).

If you need truly transparent transmission then enter an @ symbol here, in which case no code in the data stream will cause State switching, and the only way to bring this about will be to press the red button.

If the second character in the State Switch field is an "@" symbol, this implies that the State Switch code will merely reset the Node, and will not cause it to enter Control State. Any other character in this field will be treated as part of the Node Name (see below). The uses of this "Reset Only" facility (which is not available in Nodes without the new firmware, prior to serial number 5000) are discussed in Section 4.2.3, page 32.

Node Name: Optionally each Node can be given an identifying name that is written into the Node Label as a piece of plain text. Names are useful to identify the devices connected to the Node. This is free format - you may put anything you like here and it will be echoed to any remote CLEARWAY Node using the Q option to query the identity of its Link Address.

Status Report: This is a code letter corresponding to the LED indication. It is only present the first time RETURN is typed when entering Control State.

Ring Fail Indicator: This 2-digit code indicates the last Node to report Ring failure. If the Node has not previously been connected or if there has been no such failure the Node will report "00" here.

4.2.1 The Style String

The Style String breaks down as follows:

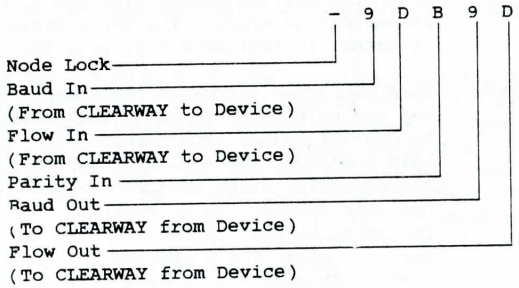

Node Lock: When a Public Node is being accessed as one end of a Link, it is essential that this Node revert to being Public when communication is complete so that the attached device can be accessed by another Node. CLEARWAY automatically "times-out" the Link when no data has passed across it for 30 seconds. If pauses in communication of longer than 30 seconds are anticipated it is possible to "Lock" the Link Node into communication with the user's Node by the use of one of the Lock characters in this field. The function of each of the different Lock modes is described in Section 4.2.3. A hyphen ("-") in this field signifies that no locking is required.

Baud In: This single character code sets the baud rate for data received into your terminal. (The Node is serving the local terminal, so the name "Baud In" indicates data transfer from the terminal's point of view). The baud rate codes are indicated in Figure 4.2, page 36.

Flow In: This single character informs the CLEARWAY Node of the flow control method its local device will use to limit the rate at which it receives data. The flow control codes are indicated in Figure 4.3, page 36.

Parity In: This single character specifies the type of parity your terminal expects to receive. Parity codes are indicated below. Notice there is no "Parity Out" parameter in the Style String because CLEARWAY has its own internal checking mechanism on the Ring and doesn't use parity internally. The valid Parity settings are shown in Figure 4.4, page 36.

Baud Out: This is the code for the baud rate at which the local device will transmit its data. Baud rate codes are indicated in Figure 4.2, page 36.

Flow Out: The last character in the Style String specifies the data flow control method to be used by CLEARWAY to limit data transmitted out of the local device towards the Ring. Again the valid settings are shown in Figure 4.3, page 36.

The Listing Mode option exists only for Flow Out. This is to prevent spurious characters from being returned by a printer or other "output-only" device.

4.2.2 Public Addressing and Cross Addressing

There are two ways in which a user's Node can establish communications with a Link Node.

i) If the Link Node has as its Link Address the Address of the user's Node

e.g. 42-7DB7D69@.USER'S.NODE.
69-9XE9X42A.LINK.NODE.

This is called Cross-Addressing, since each Node is configured to Link to the other. Under no circumstances can any other Node communicate with either of the two Nodes involved until one or both of them is re-configured to a different address.

ii) If the Link Node has 00 as its Link Address

e.g. 42-7DB7D69@.USER'S.NODE.
00-9XE9X42A.LINK.NODE.

The Link Node is said to be Public Addressed, or simply "Public". It is unable to instigate communication (since no Node can have an address of 00) but once it has been contacted by another Node, full two-way exchange of data can follow. Once such communication is established, the Public Node keeps an internal record of its current Link Node, although this cannot be accessed externally. Unless Node Locking is used (see 4.2.4, page 34) the Link will be broken 30 seconds after the last data has passed in either direction (see 4.2.3, page 33).

4.2.3 Reset and Timeout

A Node will Reset under a number of conditions:-

i) On Power-Up.

ii) When the Node is reconfigured using the Red Button or its State Switch.

iii) Following receipt of a Reset Code when in Reset Only mode or as a Remote Reset (see below).

iv) After a timeout.

4.2.3.1 Reset

Reset should not be confused with re-configuration (Control Mode), which enables the user to change the Node's operating parameters. Resetting implies that the Node returns to Idle status. For a Public Node this means that the address of its last Link Node, (held internally) is set to zero, preventing it from initiating further communications. Also, any Node that is "Locked" is "un-Locked" by a Reset; i.e. the Link is broken. One-Shot Hold ("+") is returned to No-Hold ("-") and a terminal using Login ("&") has to log-in again (i.e. send another &).

Reset using the State-Switch Code can either be Local (received from the attached device) or Remote (received over the Link). The exception to this is the use of Break, which cannot be used to reset a Node remotely. To reset a Node remotely it is merely necessary to send its State Switch code to it from its Link Node. It is essential that the two Nodes involved have different State Switch Codes, otherwise the Local Node will be reset rather than the Link Node.

Following the State Switch with an "@" in the Node Label implies Reset Only (Reset but do not enter Control Mode). All State-Switch Resets work with a 4-Second Timeout (see below).

Whenever a Node resets it "drops" its modem control lines for a period of approximately 2 seconds. This occurs regardless of the data flow control options in the Node Label. Data will be accepted if the user transmits. The signals concerned are on lines 5, 6 and 8.

4.2.3.2 Timeouts

There are three distinct Timeouts which operate within CLEARWAY, which should not be confused with one another. They are:

i) 30-Second Timeout

When no data has passed over a link for 30 seconds, communication is deemed to have ceased and the Node resets. This is mainly for use with Public Nodes. Node Locking (see 4.2.4) is used to prevent this when it is undesirable.

Note that 30 seconds is the usual value, although Nodes can be delivered with a different timeout value if required (see Section 6).

ii) 15-Second Timeout

In Control Mode the Node waits for 15 seconds for a response to its Prompt before assuming the answer to be "Y". This is to prevent a Node from remaining permanently in Control Mode (and therefore disconnected from the Ring).

iii) 4-Second Timeout

When a Node receives a State-Switch code, it waits for 4 seconds before actually resetting to allow any communication in progress to complete. The 4 seconds extend from the end of the last character to pass through the Node (which may be the State Switch code if no transmission was in progress). If the Node was transmitting or receiving a large file, for example, it could be several minutes before the timeout takes effect.

4.2.4 Node Lock Options

To prevent a Link with a Public Node from "timing-out" a number of Locking options are available. These function as follows:-

i) "*" - Permanent Hold

Once established, the Link is held indefinitely, until the Node is reset.

If "*" is used in the Node Label of a Public Node (i.e. 00*.....) this is referred to as Public Hold. The first Node to make contact will remain locked-on until the Public Node is reset (see 4.2.3) whereupon it will revert to being Public again (after a 4 second timeout) and be ready to communicate with the next Node to send it data.

ii) "+" - One-Shot Hold

The function of this Hold option is as for "*", except that once the Node has been reset it reverts to the "Unlocked" state (i.e. a hyphen in the Node Lock field). It thus provides a "One-Shot Hold" facility. To repeat the process the user must explicitly re-configure the "+" back again.

iii) "&" - Login

This is a facility designed to overcome the problem of accidentally holding a link. The Node will not accept any input until an & is keyed-in. If any other characters are keyed-in the Node simply echoes a "bell" code and ignores the input. The & enables the Node for input. The & is not transmitted to the Link Node, but any subsequent &'s will be. If data is received from the Link Node the input is enabled immediately. In either case the Link is now in "Hold" mode, and may be released by any of the reset conditions (see 4.2.3) after which another & must be keyed.

iv) "-" - No Lock

The character implies that the Lock feature is not to be used.

Note that none of these locking options takes effect until communication is established. Only one end of any Link should use a Lock character. The other end should always use a hyphen. (If a Link is locked at both ends then both Nodes will need to be reset before the Link can be broken).

4.2.5 Interacting With The Label

Every time the Label appears on your terminal it prompts for a response that should be one of the following:

Y Yes, I accept the Label as configured. Entering Y will cause the Node to leave the Control State and enter Communication State.

N No, the current Label is not what I want. An N will keep the Node in the Control State and allow you to edit the Label.

Q Query the Link Node currently addressed by this one. Responding to the prompt with Q will return the Label of the remote Node to which this Node is presently Linked.

4.2.5.1 How To Edit The Node Label

To skip to the next parameter without changing the current one simply type a space. You may also use the "=" key, in which case the code numbers corresponding to the baud rates currently being used will be inserted in the 2 baud rate positions, and the original settings will be placed in all other fields.

In many cases the only parameter you will want to change will be the Link Address. There is no need to work through the rest of the Node Label - having typed the new Address simply press the RETURN key.

The TAB key can be used to display the rest of the Node Label without the automatic acceptance implied by RETURN. Thus if you wish to change the Link Address and then confirm that you have the correct Node, a TAB following the new Link Address will complete the Label and give you the prompt, and a Q will then interrogate the Linked Node.

Baud Rate	CLEARWAY Code
50	1
75	2
110	3
300	4
600	5
1200	6
2400	7
4800	8
9600	9

Figure 4.2 - Baud Rate Settings

Parity	CLEARWAY Code	Explanation
Odd	O	
Even	E	
Mark	M	Top bit always 1
Space	S	Top bit always 0
Binary	B	Top bit unchanged

Figure 4.3 - Parity Settings

Flow	CLEARWAY Code	Explanation
Xon/Xoff	X	"Soft" flow control
None	N	No flow control used
DTR	D	"Hard" flow control: Flow In: Line 20 used Flow Out: Line 5 used
Listing Mode	L	Prevents characters from being returned by an output-only device. (Valid only in 'Flow-Out'.)

Figure 4.4 - Flow-Control Settings

4.3 Hunting Mode

Hunting Mode allows a user to specify that his CLEARWAY may connect to any one of a number of Link Addresses depending on which is free. The main use for this would be where a number of printers, each producing identical output formats, are shared between several computers. The user doesn't care which one actually prints his output so long as it comes out as quickly as possible. By specifying Hunting Mode during configuration he can let CLEARWAY select a free printer and send the printout to it.

4.3.1 How To Select Hunting Mode

When editing the Node Label of your local Node, replace the second digit of the Link Address with "X", e.g.

```
3X-9DB9D22A..MY.COMPUTER...
```

Your Node will now "Hunt" among all "Public" Nodes in the range 30-39. If all the printers to be shared are connected to Nodes whose addresses are in this range then CLEARWAY will divert any output to the first Node on the Ring connected to a printer which is not in use.

To illustrate how this works, consider the following example. Three computers are connected to Nodes configured as follows:-

```
3X-9DB9D22A..COMPUTER.A
3X-9DB9D27D..COMPUTER.B
3X-9DB9D42@..COMPUTER.C
```

Also on the Ring are two printers, whose Nodes have the following Labels:-

```
00-6DB6D35.FIRST.PRINTER
00-6DB6D33.SECOND.PRINTER
```

These five Nodes are listed in the order they appear on the Ring. If Computer B now sends some data to the printer, CLEARWAY selects the first Node on the Ring in the range 30-39 which is free (i.e. Node 35). The two Nodes are now effectively Cross-Addressed. If Computer A now sends a listing to the printer, its local Node looks for the first free printer Node on the Ring. Since Node 35 is now busy, Cross-Addressed to Computer B, this "first free Node" is number 33. Consequently Computer A Links to the Second Printer.

If Computer C now sends to its CLEARWAY Node, this data is held until one of the printers comes free. If Computer A stops outputting first then the Second Printer will be "hunted". If Computer B finishes before this then the First Printer, Node 35, will receive the output.

Please note that in order to be "Hunted" a Node must be "Public" i.e. the Link Address must be 00. If DTR-type flow-control is used, the attached device must assert DTR so that the Node can tell that this device is switched on. This is not necessary if XON/XOFF Protocol is used, but in this case the Node has no way of telling whether the device is on line.

4.4 Network Switching Under Computer Control

When CLEARWAY is used to connect several microcomputers at their printer ports it is useful for them to be able to redirect their output to different printers, or even to each other. You can do this by sending a character string from the computer as follows:

i) Send the State Switch code to initiate the set up condition.

ii) Send 64 "RETURN" characters. (The "RETURN" character is 13 decimal or 15 octal, OD hexadecimal). The purpose of sending multiple RETURNs is to allow time for the necessary switch into Control State before sending the characters that will alter the Node Label.

iii) Send an ASCII "N" character (78 decimal, 116 octal, 4E hex).

iv) Send 6 nulls or 6 exclamation marks (33 decimal, 41 octal, 21 hex).

v) Send the modified Node Label, substituting spaces to leave fields unchanged and "RETURN" to terminate the string.

In Microsoft Basic, for example, this can be achieved by the statement:

```
LPRINT CHR$(1);STRING$(64,13);"N!!!!!!23-"
```

4.5 Cable Set Configurations

A cable set is a length of cable with connectors on either end, used to form a link between two items of communications equipment. For our present purposes one of these items will always be a CLEARWAY Node, and the other the local device you want to join into the Ring. 25-way D-type connectors will usually be used. This is a convenient industry standard, although only a subset of the lines provided are relevant to CLEARWAY.

When making up cable sets you may find that a particular configuration doesn't do the job intended, and may need to add further connections for handshaking and so forth. For this reason we recommend that you always use six core cable (at least), even for the simplest cable sets. Where lines are not mentioned in a particular configuration they should be left unconnected.

Figure 4.5 - Cable Sets

Type 1 - "Straight", connects to DTE

CLEARWAY		Device
1	to	1
2	to	2
3	to	3
5	to	5
6	to	6
7	to	7
8	to	8
20	to	20

Type 2 - "Modem", connects to DCE

CLEARWAY		Device
1	to	1
2	to	3
3	to	2
4	to	6
5	to	20
6	to	4
7	to	7
20	to	5

Type 3 - "ThreeWire" (plus chassis ground), connects to DTE

CLEARWAY		Device
1	to	1
2	to	2
3	to	3
7	to	7

Type 4 - "ThreeWire-CrossWire" (plus chassis ground), connects to DCE

CLEARWAY		Device
1	to	1
2	to	3
3	to	2
7	to	7

Type 5 - "Minicomputer", as above but asserts DTR internally

CLEARWAY		Device
1	to	1
2	to	3
3	to	2
7	to	7
6 to 20		6 to 20

If your cable set is terminated by a plug at each end or a socket at each end it will look symmetrical. To avoid it ever being plugged in the wrong way round it is a good idea to make sure that the internal connections are symmetrical. (It is usually, but not always possible to make the connections symmetrical). All the cable sets we show in Figure 4.5, page 39, follow this rule.

4.6 General Example

Lets look at an example that shows how a number of CLEARWAY Nodes can be used in a company where a variety of computer and peripheral equipment is used. Figure 4.6, page 44, shows a typical Ring which might be used by an establishment developing programs or running packages on a Minicomputer and several Microcomputers, as well as having a Prestel connection, word processors and an accounts Microcomputer. Lets examine the different functions, and see how CLEARWAY helps in sharing out the available resources most efficiently.

4.6.1 Word Processing

The Word Processing function in our configuration is carried out on two machines, connected to CLEARWAY Nodes designated 84 and 85. Each of the machines operates at 9600 baud, although one (Word Proc 1) uses XON/XOFF for flow-control, whereas the other (Word Proc 2) uses DTR protocol (or Hard-Handshaking). Node number 84 can be re-configured by typing "Control B", Node 85 by using "Control A".

The two machines share a common letter-quality printer, attached to Node 12. The link between the printer and Node runs at 1200 baud and uses DTR protocol. Listing Mode ("L" in the "Flow Out" field) is used to prevent unwanted characters being returned by the printer.

The printer Node is Public Addressed, and will therefore receive its input from any device on the Ring. Word Proc 2 is configured to send its output to the printer explicitly. However, on this occasion the operator of Word Proc 1 is preparing a draft document, and doesn't mind if it appears on the letter printer or the lower-quality Accounts Printer (Node 15), as long as it can be printed as quickly as possible. Consequently the Node attached to Word Proc 1 is set to "Hunt" for the first printer on the Ring which is not in use. This would normally be the Letter Printer, but if Word Proc 2 is currently using that device, CLEARWAY will direct the output of Word Proc 1 to the Accounts printer.

The Letter Printer uses Public Hold to maintain its Link with the Word Processor using it. To cancel this Hold facility it can be reset remotely by sending it a "Control-D" character. Note that it will not enter Control Mode but merely reset and prepare to receive input from another source.

4.6.2 Accounting

Accounting is normally carried out on the machine attached to Node 61, the Accounts Micro. The machine communicates with its CLEARWAY Node at 4800 baud, using DTR protocol and Odd parity. It normally uses the Accounts Printer (Node 15) for its output, and because this can be produced at intervals with gaps of more than 30 seconds between printing sessions, the operator has "locked" this link, so that no-one else can use the Accounts Printer in these gaps. This would prevent otherwise continuous Accounts documents being interleaved with letters from Word Proc 1 in this case.

The "+" lock remains in effect until the operator resets Node 61, whereupon the Node will revert to non-locked operation.

4.6.3 Program Development - Micros

The two Microcomputers (Micro 1 and Micro 2) and the Minicomputer all share the two Data Printers, whose Nodes are designated 21 and 23. Once again, Hunting mode is used to allow these machines to share the two printers in an efficient manner.

Micro 1 is communicating with its Node (number 35) at 9600 baud using DTR protocol. Micro 2 "talks" at 4800 baud with its Node, 64, again using DTR. Neither of them use a State Switch character, and there is a good reason for this.

If files are to be transferred between the two machines, it is merely necessary to cross-address the two CLEARWAY Nodes and then send the data with an appropriate program. Thus if Micro 1's CLEARWAY Node Label is:

64-9DB9D35@.MICRO.1

and Micro 2 is:

35-8DB8D64@.MICRO.2

then files, either text or pure binary can be sent either way over the CLEARWAY Ring. If either of them had the parity checking switched on then CLEARWAY would check and strip or set bit 7 of each byte transmitted, which would prevent unformatted binary passing over the link correctly. Likewise if a reset character were used, any occurrence of a binary pattern corresponding to that character in the data stream would reset the Node. E.g. if the State Switch code for the Node attached to Micro 1 were, say, F, then the binary code 00000110, which means in ASCII "Control F" would send the Node into its reset sequence. As the full range of binary numbers from 00000000 to 11111111 could be present in

any unformatted binary transmission, all CLEARWAY Nodes either receiving or transmitting such data should avoid reset characters, parity checks and XON/XOFF protocol (which uses 00010011 and 00010001). Communication which permits the transmission of any and all binary numbers in this way is said to be "Transparent". If switching of destinations is to be carried out under program control, either the BREAK condition must be used ("*" in the State Switch position) or data must be formatted (i.e. either text or a textual binary representation, such as Intel Hex format).

Output to be printed is sent to two identical printers, attached to Nodes 21 and 23. Each Node is "Public" (i.e. its "Link" address is 00 and it will therefore receive any output directed to it from anywhere) and both machines communicate at 1200 baud using DTR protocols. No parity is used, and neither unit has a keyboard so no State Switch character is selected. Any output directed to "2X" will be printed on Data Printer 1 if it is free. If it is printing, the next data sent to "2X" will go to Data Printer 2. A third machine trying to print here will have to wait until one of them comes free. CLEARWAY, by arbitrating in this fashion, optimises use of the available facilities.

Micro 2 uses Node Locking ("*") to prevent long pauses in transmission from making the Link time out. Because no State Switch code is used it is necessary for the user of Micro 2 to reconfigure his Node and remove the asterisk when he has finished with the printer.

4.6.4 Program Development - Minicomputers

The Minicomputer in this example has 3 ports. Two are input, Public Addressed for the two VDUs and the third is an output port, addressed like the micros as a "Hunting" user of the two printers. One input port (attached to Node 71) is "fast"; in this case it operates at 4800 baud, and uses Odd parity and DTR protocol. The other port is meant primarily for connection to teletypes, and is therefore "slow". The CLEARWAY Node attached to it (72) communicates with it at 300 baud, and no line protocol is used. (At this speed none is usually necessary). The two VDUs (attached to Nodes 37 and 42) "Hunt" the two input ports. The first port on the Ring is the Fast Port, so the first VDU to log-on will find this one. The second user will log-on to the Slow Port.

Both VDUs use the "Login" facility ("&"), so that accidental use of the keyboard will not cause the computers ports to be locked. An "&" must be typed before any input is accepted by the Node. Once communication is established the Link is Locked until the VDU's Node is reset. In the case of VDU 1 this can be achieved using the "Break" key. VDU 2 uses "Control E" for this purpose. In either case the Node will reset without entering Control State (i.e. the Reset Only feature is used).

The two VDUs are using different protocols (VDU 1 uses XON/XOFF, VDU 2 uses DTR) but both use Even parity, 9600 baud transmission and no State Switch. Note that although parity from the VDUs to CLEARWAY is Even, the input ports use Odd parity (Node 71) and Space parity (Node 72). Since parity is only used between each device and its local CLEARWAY Node, and does not exist within the CLEARWAY network, this presents no problems.

4.6.5 Prestel

The Prestel terminal used here is set up to use a 1200/75 baud split-speed modem. However, in this case a different line into Prestel which uses 1200 baud in each direction is to be used. By merely setting up the Node attached to the terminal (number 63) for split-speed operation and the one connected to the modem (Node 47) for 1200 baud bi-directional communication, these two previously incompatible devices can be used together. CLEARWAY has "ironed-out" the problems. The Nodes are permanently Cross-Addressed, since they have no need to use any other devices, and no Node Locking need be used since it is impossible to break into this Link. Again they are set up for transparent communication, since characters on the Prestel Link can include binary control codes.

Note: If the Red Button is pressed and the "Return" character is sent at 75 baud, CLEARWAY automatically selects 1200 baud for its replies to the attached device.

Figure 4.6 – An example CLEARWAY installation

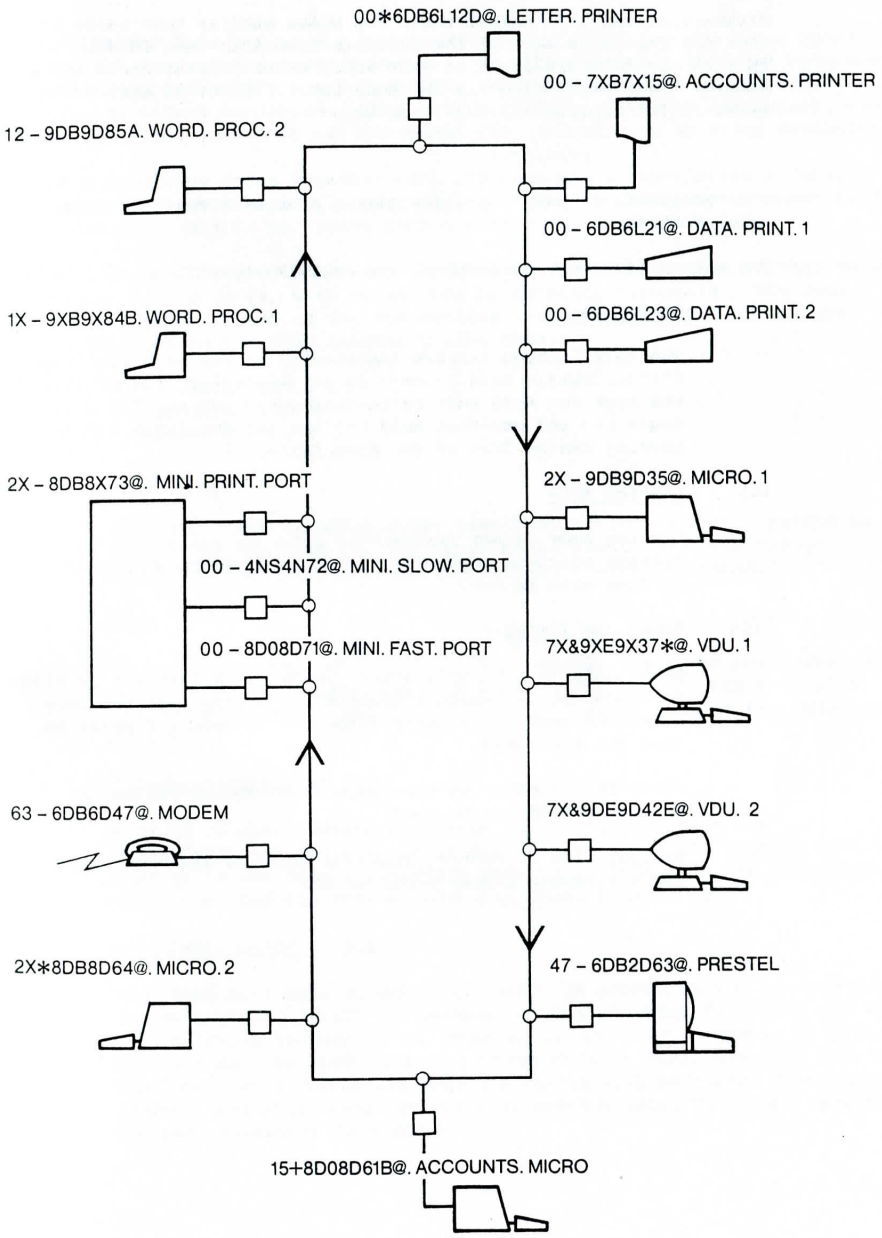

4.7 Earlier Versions of CLEARWAY

Firmware issued in CLEARWAY Table Top Nodes earlier than issue 17 does not implement many of the features listed in this Guide. To confirm the firmware issue of your Node, enter Control State and examine the prompt following the Node Label. If it is earlier than issue 17 the prompt will look like this:

(Y/N/Q/?).

The "?" offers a "Help" facility giving a brief summary of Node Label features.

The main differences in features are as follows:-

i) Node Locking

The only Locking feature implemented is the Permanent Lock ("*"). Public Hold ("00*") is not supported, and to remove the Lock the Node must be re-configured and the "*" removed. Login (&) and One-Shot Hold (+) are not available. Node Locking can be lost if the Ring fails.

ii) Listing Mode

Listing Mode is not implemented prior to issue 17. To prevent spurious characters being returned by a printer the TX line must be cut.

iii) Reset and Timeouts

Reset Only is not implemented. Nodes with firmware previous to 17 cannot be Remotely Reset although they can Remotely Reset any Nodes with later firmware. 4-Second Timeout is also not available.

State Switch codes in the range 93 to 95 and 123 to 127 decimal should not be used.

Manipulation of control lines on reset is also not supported under firmware issues prior to 17.

5. THE STATUS INDICATOR

Each CLEARWAY Node has a red Light-Emitting-Diode (LED) on the front panel to inform the user of its current status. The LED flashes in a coded sequence, repeating approximately every 3 seconds, and each sequence signifies a particular status condition. There are two types of status indication, one showing correct operation and the other giving warning of an error condition.

A table of status codes together with its name and a description of what it means is given in Figure 5.1, page 47. However, the best way to understand the status signals is to create each one in turn, as follows.

Connect three CLEARWAY Nodes together in a Direct Ring, similar to that shown in Figure 3.1, page 14, with three VDUs or printing terminals. The baud rates are obviously set as for the devices using the "=" option, but the configurations should look something like this:-

```
02-9NB9N01A..VDU.1..
00-9XB9X02@..VDU.2..
02-9DB9D03@..VDU.3..
```

5.1 Idle Status

When the three CLEARWAY Nodes have been set up, no data traffic is passing on the ring, so all three Nodes should show the "Idle" signal. ("On-off" repeated approximately every 3 seconds).

5.2 Busy

Type on the keyboard of VDU 1. Data should appear on the screen of VDU 2. As data is passing from Node 01 to Node 02 both will show the "Busy" signal. All is proceeding normally with no transmission delays.

5.3 Idle/Destination In Use

Node 03 is also addressed to Node 02. Although it is not transmitting at present, if it did nothing would get through, as Node 02 is now Busy. Therefore Node 03 is Idle, but its Destination is in use, and the status indicator shows this.

5.4 Busy/Destination In Use

Type some more data at VDU 1 and watch it appear at VDU 2. Now type on the keyboard of VDU 3. Because it has received data from the VDU and is trying to send it on, Node 03 is now Busy. However it cannot send its data to Node 02 because that Node is still Busy (it hasn't timed out yet). Therefore Node 3's status will be "Busy, Destination In Use", and will remain so until 30 seconds after VDU 2 has received the last character from VDU 1.

Figure 5.1 – Status Codes

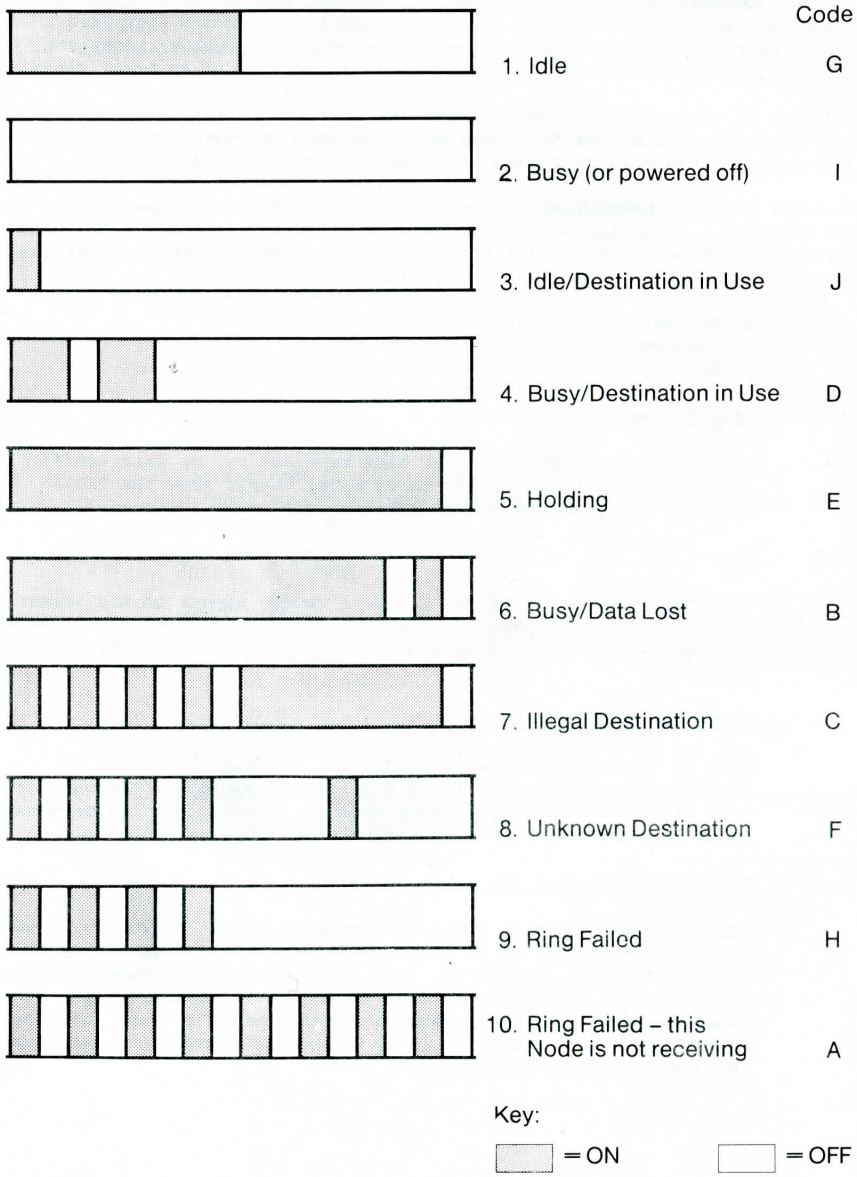

5.5 Holding

Type Control A on the keyboard of VDU 1 and reconfigure Node 01 with the Node Lock set, i.e. an asterisk (*) in the third character position.

```
02*9NB9N01A.VDU.1..........
```

When characters are typed at VDU 1 they appear on VDU 2. However over 30 seconds later the Link has not timed out, and both Nodes are showing "Holding" as their status, since the Link is locked.

Reset Node 01 and clear the Node Lock (put a hyphen in the third character position).

Now type "Control S" on the keyboard of VDU 2. This is an XOFF character, and prevents Node 02 from sending data to VDU 2. Type some more on the screen of VDU 1. Only the first character will appear on the screen of VDU 2, and the status signal of both Node 01 and Node 02 should again be "Holding", since data transmission has been blocked but Node 1 still has data to send to Node 02.

5.6 Busy, Data Lost

Continue typing at VDU 1. (Use the Repeat key if available). Eventually Node 01's buffer will fill with characters, (since it still cannot send to Node 02) but because no flow control is in use on this link it cannot tell VDU 1 to stop sending, so characters in the buffer will be overwritten and lost. Hence the signal is "Busy, Data Lost".

(Please note: it may take over a minute to fill the buffer on the CLEARWAY Node if a REPEAT key is used, or even longer if this facility is not available).

5.7 Illegal Destination

Type "Control Q" on the keyboard of VDU 2 and let Node 01 empty its buffer onto the screen of VDU 2. Wait for a further 30 seconds and the data in the buffer of Node 03 will appear on the same screen. Now reconfigure Node 02 to talk to Node 03. i.e.

```
03-9XB9X02B..VDU.2.........
```

Type some characters at VDU 1. Because the link between Node 02 and Node 03 is now fixed (they are Cross-Addressed), Node 01 cannot talk to Node 02 until Node 02 is reconfigured again. Consequently its "destination" (Link-Address) field cannot now be correct, and the status signal shows "Illegal Destination".

5.8 Unknown Destination

Reconfigure Node 01 to Link to an imaginary Node, number 04, i.e.

04-9NB9N01A..VDU.1.....

Now type some characters on the keyboard of VDU 1. Since there is no Node on the Ring to receive these characters, the Status Indicator will show "Unknown Destination".

5.9 Ring Failed

Withdraw the jack plug of Node 03 from the back of Node 01. The indicators on Nodes 01 and 02 should give the "Ring Failed" message, since the Ring has been broken.

5.10 Ring Failed - Not Receiving

Node 03 should now be showing the "Ring Failed - Not Receiving" message, since nothing is coming in through its jack lead, which is no longer connected to Node 01.

6. OPTIONS AND PACKAGES

There are a number of options available with the Standard CLEARWAY Node which can be specified at time of order. These include:-

6.1 Timeout Values

The standard value for the timeout, after which a Node reverts to Idle Status is 30 seconds. This can be changed (before delivery) to cater for special requirements. The minimum value for the timeout is 4 seconds.

6.2 2-Character Reset

Normally a single character is used to reset a Node if a non-null value is used in the State Switch field of the Node Label. This may not be suitable for some applications where the Node has to be re-configured by software, it is necessary to send data transparently and the Break condition cannot be generated by the attached machine. In this case a 2-character reset can be specified, and the Node will then reset only on this sequence of 2 characters (or when the red button is pressed).

Note that the first character of a 2-character reset sequence is usually transmitted to the Link Node. This feature can normally be supplied in table-top Nodes at the expense of another feature.

6.3 Further Options

Various other operating parameters can be changed or features added on request, although it is normally necessary to charge for this service. If you have any particular requirements please contact the manufacturer for a quotation. Examples of such options are special baud-rate values, different number of data bits, etc.

6.4 Software Packages

Because CLEARWAY is transparent to any machine connected to it, it will work with just about any communications software package. Your local dealer or Real Time Developments Limited can provide such a package; i.e. Peachtree's Telecomm.

The package will run on most CP/M and MS-DOS based systems, although it may require some user configuration. It provides VDU emulation and comprehensive file-transfer capability, For further details contact your dealer or RTD.

6.5 Fileserver

Fileserver is a product which uses the CLEARWAY network to enable multiple machines to access a shared mass-storage facility (usually a Winchester disk) on a remote machine. Access to the disk is completely transparent to the software using it; despite the fact that all disk reads and writes are actually via the machine's RS-232 port, the software merely "sees" another disk, apparently connected to the machine in the same way as all the others.

For further details on Fileserver, contact RTD.

APPENDIX A - THE CLEARWAY RANGE

In addition to the "Standard" Node there are four other models in the CLEARWAY range. They are:-

Model M - The Message Multiplexor.
Model B - The Byte Multiplexor.
Model R - 19-inch Rack-mounting version.
OEM Board - A board designed specifically for incorporating in OEM equipment

To describe the "Rack" as a Model in its own right is not strictly correct. Although it has been upgraded with modified hardware and greater software functionality, it is fundamentally a framework into which standard Model M and Model B Nodes can be incorporated, in any combination. Models M and B come in either desk-top or rack-mounting versions.

The OEM Board is essentially a Rack Node, containing any of the software types, which can be incorporated directly into users' own equipment. For further details contact your dealer or RTD.

The following pages explain in some detail how each of the Models work and how they can be used.

A.1 The Multiplexors

The CLEARWAY Multiplexors are of two basic types, the Model M or "Message Multiplexor" and the Model B or "Byte Multiplexor". Each will permit a single machine to communicate with a number of other machines, and the major differences are discussed below.

The Model B - Byte Multiplexor

The Model B is primarily designed to communicate with a number of Standard CLEARWAY Nodes, and requires "intelligence" only in the machine attached to it. Thus a typical application of a Model B would be to input from and output to a number of "dumb" terminals via a single computer port. (See Figure A1, page 54).

From the viewpoint of machines connected to Standard Nodes, there is no discernable difference between communicating with a computer port connected to a Model B and one connected to a Standard Node (except possibly that the response is slower using the Model B). However the computer port is receiving input from (and sending output to) not one Node but several simultaneously. The Model B "packets" all incoming data in such a way that the computer is informed of the source, and the computer has to packet all outgoing data similarly to inform the Model B of the intended destination. None of this packeting is visible to the Standard Nodes communicating with the Model B.

The Model M - Message Multiplexor

Any number of Model M CLEARWAY Nodes can be used to communicate with one another under program control, and therefore processing power is required at all Nodes. The Model M is primarily intended for exchanging data between a number of computers under software control. Routing of data is entirely dependent on the software in the attached computers. (See Figure A2, page 54).

The packeting of information in the Model M CLEARWAY Node is not transparent to the applications software, and the packets are not modified by the Nodes themselves except for a single byte indicating where the packet originated.

It is possible to use a mixture of all types of CLEARWAY Node on the same Ring, all communicating with one another. Therefore although the above paragraphs describe only Model Bs communicating with Standard Nodes and Model M's in communication with each other, there is no reason why several Model Bs and even both types of Multiplexor should not be used together. The limitation comes in the complexity of the driving software.

A.2 Model R - The 19"-Rack-Mounting Version

CLEARWAY Nodes come in two basic forms. The first is the familiar "white-box" or desk-top Node; the second is the Rack-mounting variant. This latter version also includes the new OEM board, and the format is independent of firmware issue (i.e. any Node, be it desk-top, Rack-mounting or OEM board can be issued with any version of the firmware - Standard, Byte-Multiplexor or Message-Multiplexor).

There are several different constituent parts to a complete CLEARWAY Rack:

i) The Rack Housing and Backplane
ii) The Power Supply
iii) The Power Monitor
iv) The Node Board
v) The Ring Terminator
vi) Dummy Nodes

Each Rack system must have elements i, ii, and iii. (One of each). The functions of the Housing and the Power-Supply are obvious, but the Power Monitor carries-out three distinct tasks. Firstly, as its name implies, it monitors the Power Supply to detect Power-Up and Power-Down conditions, and provides the appropriate reset signals to the Nodes. Secondly it provides the extra voltage rail which permits the EEPROM to be written-to. (The EEPROM replaces the battery-backed CMOS RAM used to hold the configuration in the desk-top Node). The third function is to provide 'Local' Mode operation.

Figure A1 – Typical Model B Application

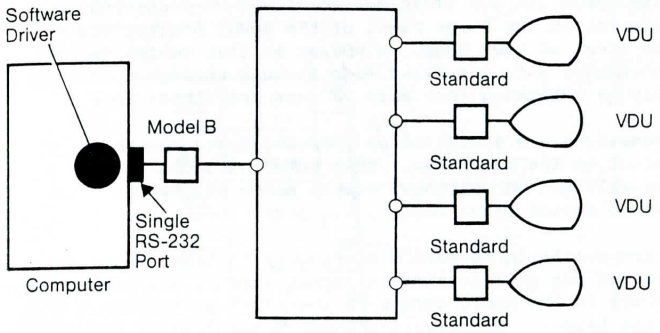

Multiple "Dumb" VDU's sharing a single port on a Computer

Figure A2 – Typical Model M Application

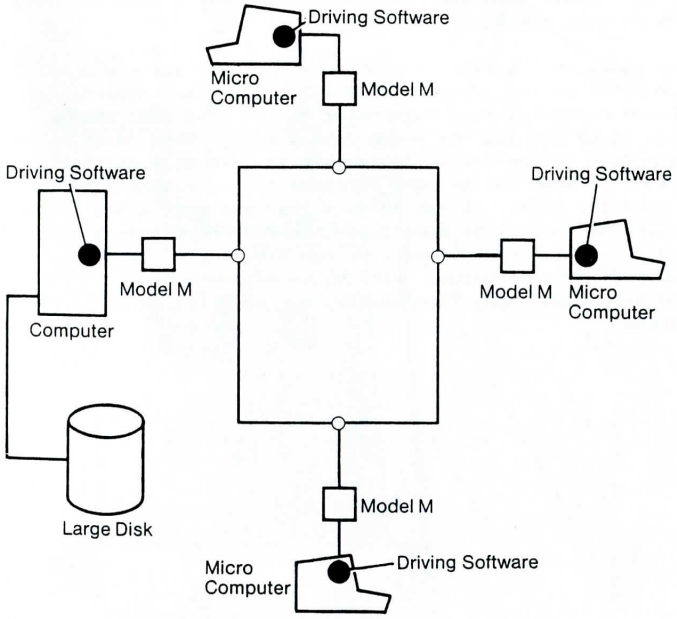

Multiple Micro Computers exchanging files with a central storage facility.

'Local' mode is generally used to configure an installed rack. Since the RS232 connector for each Node is on the backplane, for convenience of installation, it is difficult to disconnect a Node from its appointed device for configuration. In Local mode a Node is disconnected from its own RS232 connector and re-connected to a separate connector on the front panel of the Power Monitor via a Switch on the front of each Node. A VDU or similar device can then be used to configure each installed Node in turn through this single socket, merely by switching each Node in turn into Local mode.

The Nodes themselves are installed on extended Eurocards and plug into a connector on the backplane. They have the usual Status Indicator, as well as two switches, one in place of the "red button" and the other to select Local mode.

Dummy Nodes are available to ensure continuity in Racks where Nodes have been removed for modification or repair. It is not possible to have empty slots in the Rack, except to the right of the final Ring Terminator (see below). Consequently Dummy Nodes prevent the need to move all the other Nodes if one is removed.

The Ring Terminator must be fitted to every Rack since it carries the Ring signals. Without this card the Ring could not be completed. It must be fitted in the position following the last Rack Node. There must also be no vacant slots to the left of the Ring Terminator. More than one Ring Terminator may be used in Racks containing more than one Ring (see below).

There are 11 slots in the Rack, excluding the places for the Power Supply and Monitor units. These may be filled with any combination of Nodes, Dummy Nodes and Ring Terminator cards. The most common configuration is to put all the Nodes onto a single Ring, with up to ten Nodes supplied by the Rack. However it is just as feasible to divide the Rack between two or more separate Rings, with a Ring Terminator card for each. It can be seen that the more Rings which share the Rack, the fewer the number of CLEARWAY Nodes that are available in it. (If all Nodes were on one Ring, up to ten slots could be occupied by Node cards. With three separate Rings it is necessary to have three Ring Terminators, and so there is only space for eight Nodes).

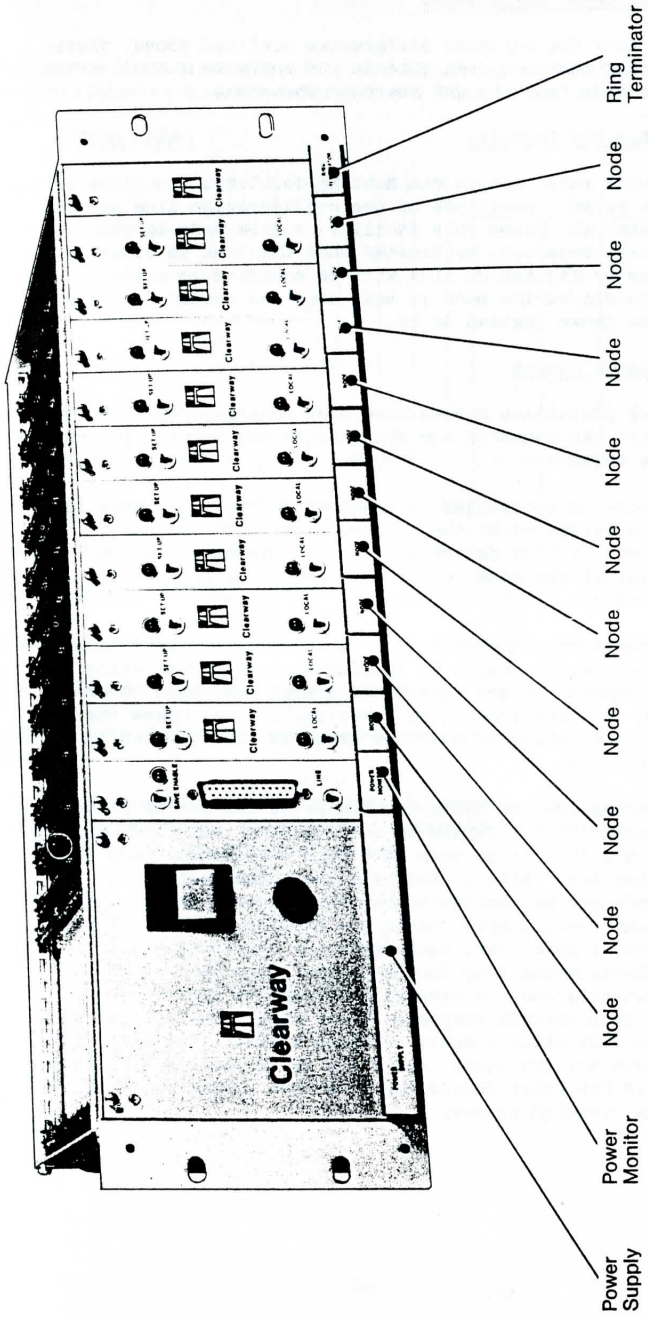

Clearway Model R

A.2.1 Rack Software Differences

Apart from the hardware differences outlined above, there are extra features available in the software fitted to the Rack boards (and the OEM Board). These are:

Hunt And Set Facility

This is a variation on the Hunting facility. In place of rX in the first 2 positions of the configuration line you may now enter rH, Using this facility, a free Node in the relevant range will be located when the link is first used and the configuration line will be modified to reflect this. When configuration mode is next used the actual link address will be shown instead of rX.

Confidence Checks

Various confidence checks have been incorporated to help identify the cause of any fault which may occur. The tests are as follows:-

The relay is controlled by a watchdog timer, and this in turn is triggered by the Z80 processor. Should the processor fail or detect an internal system error the relay will switch the Node out of the Ring, thus not upsetting other users.

Detectable system errors include a PROM checksum failure at power on, error status in various control bytes during normal operation and failure of a Ring loop-back check during configuration or at power on. In all cases the most likely indication of a system error is that the LED is on continuously.

To distinguish the failure modes press the set-up button. This will force a bypass of the checksum test, and the Node will only fail to go into auto baud rate detect mode (LED flashing very fast) if the Ring loop back test fails. If the Node can be configured but fails during normal operation then the control byte checks are failing, indicating RAM failure or some other hardware fault causing RAM corruption. The checksum and Ring loop-back tests are repeated indefinitely and the Node will attempt to operate should there be a correct response at any time. The control byte checks will cause a delay of about 1 minute and then reset the Node and try again; the delay is to prevent excessive wear of the relay should the Node have a hard fault which causes repeated errors.

APPENDIX B - SUMMARY

Reproduced below are several of the tables given earlier in this guide, provided here as a quick-reference for your convenience.

B.1 Node Label

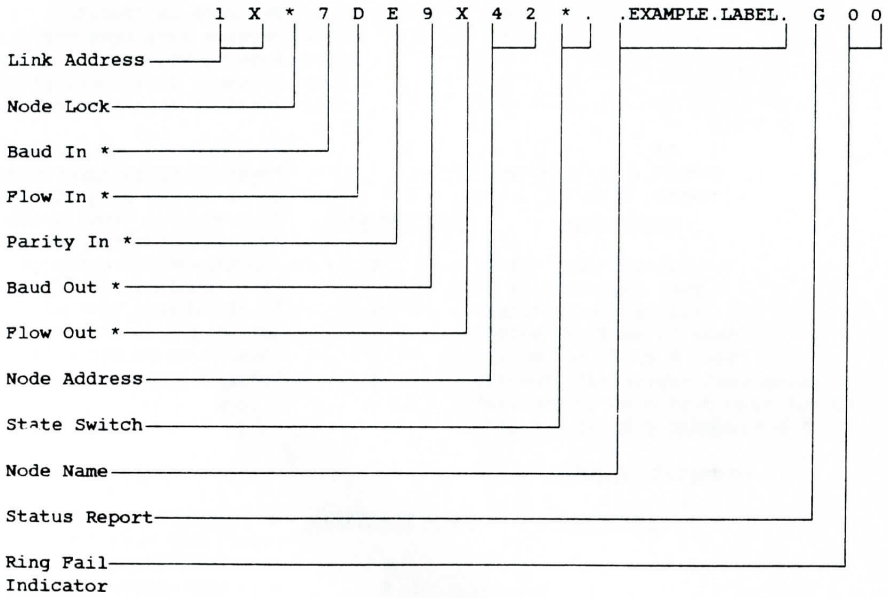

* The expressions "In" and "Out" are as seen by the connected device, not the CLEARWAY Node. Thus Baud In means the rate at which the Node sends data to the attached Serial device.

B.1.1 Link Address

Permitted Value	Meaning
Decimal Number (01 to 99)	A direct connection to the Node whose numbers is explicitly stated.
00	The Node is "Public". It will receive data from the first Node to send to it, but cannot transmit data until it first receives data from the Ring.
nX (where n is a decimal number, 0 to 9)	This Node is required to "Hunt" for the first Node found on the Ring (in the direction of flow) which is Public Addressed (see above) and is not currently engaged in communication. (The "Hunted" Node must also be attached to a device that is capable of receiving data; see B.4 (page 64)).

B.1.2 Node Lock

Permitted Value	Meaning
*	This maintains communication capability with the Linked Node indefinitely. The Link will not timeout until Node is reset.
+	The Link is held until the Node is reset. The + then reverts to a -.
&	No characters accepted until an & is typed. Then as for *. When reset it requires an & again, etc.
-	The Link is temporary. 30 seconds after the last data has been received by the Link Node the Link will timeout, and either Node will be capable of receiving data from another source.

B.1.3 Baud In/Baud Out

Baud Rate	CLEARWAY Code
50	1
75	2
110	3
300	4
600	5
1200	6
2400	7
4800	8
9600	9

B.1.4 Flow In/Flow Out

Flow	CLEARWAY Code	Explanation
Xon/Xoff	X	"Soft" flow control
None	N	No flow control used
DTR	D	"Hard" flow control: Flow In: Line 20 used Flow Out: Line 5 used
Listing Mode	L	Prevents characters from being returned by an output-only device. (Valid only in 'Flow-Out'.)

B.1.5 Parity

Parity	CLEARWAY Code	Explanation
Odd	O	
Even	E	
Mark	M	Top bit always 1
Space	S	Top bit always 0
Binary	B	Top bit unchanged

B.1.6 Node Address

Permitted Value	Meaning
Any decimal number in the range 01-99	The address of this Node.

B.1.7 State Switch

Permitted Value	Meaning
@	Transparent Mode - the Node can only be reset by pressing the red button followed by a RETURN character from the attached device. Used for communication of unformatted binary data or data streams containing control characters.
*	The Node will reset if it detects the BREAK condition (the TX data line held "low" for a period of 500ms or longer). Can be used to provide reset under computer control in Transparent Mode.
Any other character	The control code associated with this character will cause the Node to reset if received from the serial device (e.g. Control A if the letter A is used, etc).
Any character followed by @ e.g. A@	"Reset Only". The Node will not enter Control State on receipt of this character but will merely reset.

Note: It is recommended that the letters Q and S should be avoided for the State Switch code if XON-XOFF protocol is used. (Since Control Q and Control S are XON and XOFF). Likewise the letters I, J, L and M are not recommended since their control code equivalents are "Horizontal Tab", "Line Feed", "Form-Feed" and "Return" respectively, and may be found embedded in text files.

B.1.8 Node Name

Any combination of "printing" characters may be used here, since this is a comment field used to identify the Node when the "Query" facility is used.

B.1.9 Status Report

This single letter code is reported by the CLEARWAY Node, and corresponds to the Status Signal on the front of the Node. (See B.2, page 63).

B.1.10 Ring Fail Indicator

This 2-digit number is the address of the last Node to report Ring Failure. If no Ring Failure has occurred since the Node was first configured this will be "00".

B.1.11 Prompt

Every time the label appears on your terminal it prompts for a response that should be one of the following:

Y Yes, I accept the label as configured. Entering Y will cause the Node to leave the control state and enter communication state.

N No, the current label is not what I want. An N will keep the Node in the control state and allow you to edit the label.

Q Query the Node currently cross addressed by this one. Responding to the prompt with Q will return the label of the remote Node to which this Node is presently connected (unless Hunting Mode is selected).

The prompt is preceded by a 2-digit code which is the version number of the firmware fitted.

Figure B.2 – Status Codes

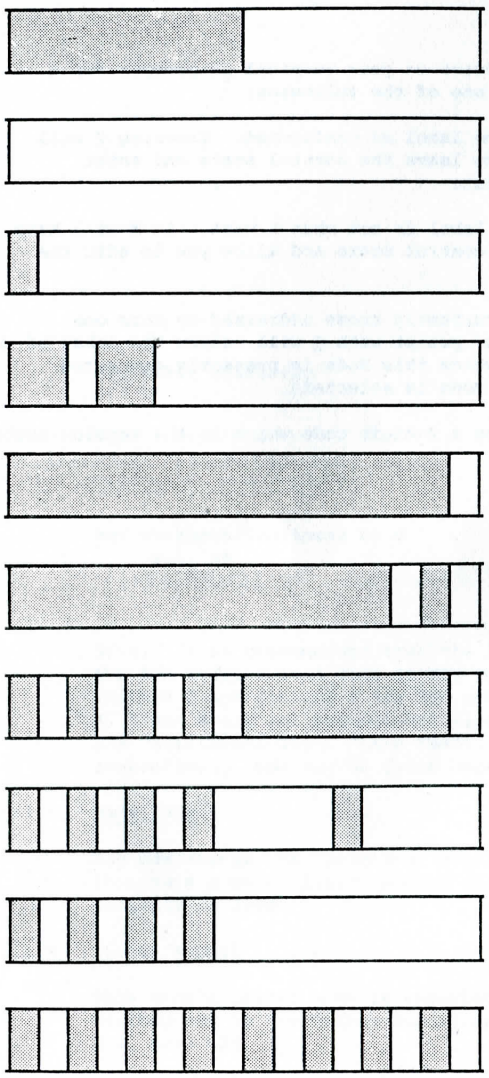

	Code
1. Idle	G
2. Busy (or powered off)	I
3. Idle/Destination in Use	J
4. Busy/Destination in Use	D
5. Holding	E
6. Busy/Data Lost	B
7. Illegal Destination	C
8. Unknown Destination	F
9. Ring Failed	H
10. Ring Failed – this Node is not receiving	A

Key:

= ON = OFF

B.3 Pin Connections

Pin	Direction	Signal Name	
1		Chassis Ground	
2	to CLEARWAY	Transmitted Data	(TxD)
3	from CLEARWAY	Received Data	(RxD)
4	to CLEARWAY	Request to Send	(RTS)
5	from CLEARWAY	Clear to Send	(CTS)
6	from CLEARWAY	Data Set Ready	(DSR)
7		Signal Ground	
8	from CLEARWAY	Data Carrier Detect	(DCD)
20	to CLEARWAY	Data Terminal Ready	(DTR)

B.4 Points Worth Noting

The following is a short list of points worth noting concerning the way CLEARWAY works. It is possible that problems may arise when using CLEARWAY which may be resolved by reading this list.

B.4.1 Configuration

Whenever a CLEARWAY Node enters Configuration Mode from a press of the red button the following happens:

i) all Flow Control is disabled;

ii) the Node reverts to Even Parity for communication with the attached serial device;

iii) the Node is disconnected from the Ring.

Point ii) is not true when reset is by control code (i.e. using the State Switch).

B.4.2 Communication Mode

CLEARWAY always handles bytes/characters on the RS-232 link in the following format:

1 start bit
either 7 data bits + 1 parity bit (with parity E,O,M or S)
or 8 data bits (with parity B)
1 stop bit.

B.4.3 Node Lock

Node Lock is effected by frequent "polling" of the Link Node by the Node holding the Lock. The Lock may be lost if:

i) the Ring fails for more than 30 seconds;

ii) either of the Nodes involved is disconnected from the Ring for more than 30 seconds.

Note that point ii) also applies if one of the Nodes is held in Configuration Mode for a period exceeding 30 seconds.

Communication (and the Lock) will be restored if no-one else has established a dialogue with the Link Node in the period during which the Link was lost.

B.4.4 Hunting Mode

A Node can only be Hunted if it is Public Addresssed (i.e. its Link Address is 00). Also the DTR Line from the attached device must be asserted at the time the Node is Hunted, if DTR Flow-Control is selected, to ensure that the attached device is on line. In firmware issues prior to H17 (i.e. without a version number in the prompt) this is true even if XON/XOFF protocol is used.

B.4.5 XON/XOFF and DTR Protocols

Some printers use both XON/XOFF and DTR Protocols simultaneously for their flow control. If the attached CLEARWAY Node is configured to use DTR Protocols, the XON and XOFF characters will be passed back through the system to the transmitting device, which under exceptional circumstances may be locked up by receiving too many XOFF characters. "Listing Mode" ("L" in the "Flow Out" Field) should be used to overcome this.

B.4.6 BREAK Condition

The BREAK condition can be used with CLEARWAY, both as a means of resetting a Node and as a transmitted condition. CLEARWAY is completely transparent to BREAK, unless it is used as a State Switch condition (see page 29). Note however that BREAK cannot be used for Remote Reset.

B.5 Suggested Cable Sets

The following is a list of some of the more commonly-found equipment with a suggested cable-set for connecting each one to CLEARWAY. No information is provided as to the gender of the D-type connector at the device end; the user must ascertain this for himself. The connector required at the CLEARWAY end will always be male. Type numbers refer to the cable sets described in Figure 4.5, page 39. "Special" cables are described at the end of the table.

Although every effort is made to ensure accuracy, much of the information shown here has been provided either by the equipment's manufacturer or another third party, and Real Time Developments Limited can accept no responsibility for any damage resulting directly or indirectly from the use of a cable described below, nor for the failure of any such cable to work as described.

Manufacturer	Device(s)	Cable Set Type
ACT	Apricot	1
ACT	Sirius	1
Addmaster	170/180	1
ADDS	Multivision (Serial)	1
ADDS	Multivision (Console)	2
Altos	ACS 8000	1
Apple	Super Serial Card (Terminal)	2
Apple	Super Serial Card (Modem)	1
Apple	Apple III	2
Beehive	DM 5/5A/5B/10/20/30,Topper (Main)	1
Beehive	Topper (Auxiliary)	2
Burroughs	B21/B22	1
Canon	CX-1/BX-3	2
Casio	FX 9000P	1
Centronics	150/350 Series, 704-9 (Serial interface)	1
Cifer	26/28 Series, Series 1	1
Commodore	Super PET (9000 Series), VIC-20	1
Convergent	1000	1
Corvus	Concept	1
Cromemco	Quadart	1
Data General	Dasher D100/D200/G300/TP1/TP2,MPT/100	1
Diablo	1610/1620, KSR 1640/1650	1
Diablo	RO630	1
DEC	LA Series Printers	1
DEC	Rainbow PC-100 (Communication)	1
DEC	Rainbow PC-100 (Printer)	4
DEC	VT100	3
Epson	MX-70/80/100	1
Epson	HX20	Special
Facit	4500 Series	1 or 3 with XON/XOFF
Fujitsu	SP830	1

Manufacturer	Device(s)	Cable Set Type
Hazeltine	1400/1500, Espirit I/II	1
Hazeltine	Executive Series	1
Hewlett Packard	HP125	1
Hewlett Packard	Series 80 (Option 001 Cable)	1
Hewlett Packard	Series 80 (Standard Cable)	2
IBM	3101 Comms interface	1
IBM	PC	1
C.Itoh	Prowriter 1/11, F10	1 or 3 with XON/XOFF
Lear Siegler	310 (Serial)	1
Lear Siegler	ADM-3A and ADM-5 (Modem)	1
Lear Siegler	ADM-31, 32, 42 (Modem)	1
Mannesman Tally	MT-180, MT-160	Type A
Mannesman Tally	MT-1705, MT-1805	Type A
Mannesman Tally	MT-1612	Type A
Mannesman Tally	Tally 2000	Type A
Mannesman Tally	Tally 2000	Type A
Mitsubishi	Multi-16	1
NEC	3500R	1
NEC	3500 & 7700 series	1
NEC	APC	1
NEC	PC8001A	Special
North Star	Advantage	1
North Star	Horizon	1
Okidata	Microline 82/83 84A/83A	1
Olivetti	OPE TH 240	1
Osborne	Osborne 1	2
OSM	Zeus	1 or 3
Perkin-Elmer	550 & 1251	1
Qume	Sprint 5	1
Qume	Sprint 5 9/45 & 9/55	1
Santec	Variflex	1
Siemans	2712 & PT80 12	1
Smith Corona		1
Silver-Reed	Silver-Reed	1
Tektronix	4050 Series, 4643	1
Teletype	Data Speed 40/2 (Comm), 40	1
Teletype	Model 43	1
Televideo	910/925/950	1
Televideo	TS800A/TS802/TS80H (DTE)	1
Televideo	TS800A/TS802/TS80H (Serial Printer)	2
Televideo	TS806(Port P2)/TS816(Port P9)	1
Televideo	TS806(Port P3)/TS816(Port P2,P9)	2
Texas	System 200	1
Texas	810	1
Texas	Insight Series 10	1
Texas	Silent 745	1
Texas	Silent 781/783/785/787	Type A
Toshiba	T100/200/250 Computers, P1350 Printer	1

Manufacturer	Device(s)	Cable Set Type
Victor	9000	1
Xerox	820/820-2 (Comms. Port J4)	1
Xerox	820/820-2 (Printer Port J3 with option)	1
Xerox	1700/1730/1740/1750 Printer	1
Zilog	System 8000 Models 10/11/21/31	2

The "Type A" cable mentioned above uses Pin 11 on the specified device for hardware flow-control. The cable looks like this:

CLEARWAY		Device
1	to	1
2	to	2
3	to	3
5	to	5
6	to	6
7	to	7
8	to	8
20	to	11

The "Special" cables require a special connector (i.e. not the standard 25-way D-Type) at the device end. These are normally available from the manufacturer of the equipment in question.