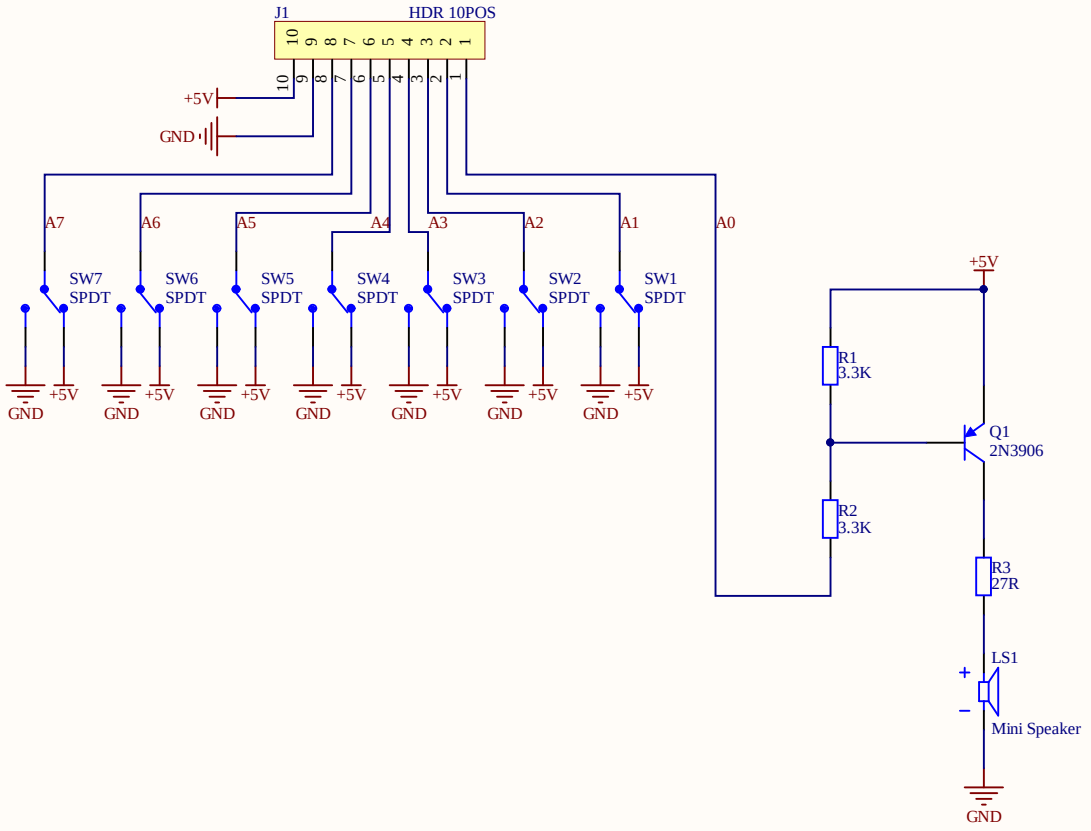

Title		
Size A	Number	Revision
Date: 12/16/2020		Sheet of
File:		