REPAIR MANUAL 2014

WWW.KTM.COM

# 690 SMC R EU
# 690 SMC R AU/GB

Art. no. 3206193en

# INTRODUCTION



Read this repair manual carefully and thoroughly before beginning work.

The vehicle will only be able to meet the demands placed on it if the specified service work is performed regularly and properly.

This repair manual was written to correspond to the latest state of this series. We reserve the right to make changes in the interest of technical advancement without at the same time updating this repair manual.
We shall not provide a description of general workshop methods. Likewise, safety rules that apply in a workshop are not specified here. It is assumed that the repair work will be performed by a fully trained mechanic.

All specifications are non-binding. KTM Sportmotorcycle AG specifically reserves the right to modify or delete technical specifications, prices, colors, forms, materials, services, designs, equipment, etc., without prior notice and without specifying reasons, to adapt these to local conditions, as well as to stop production of a particular model without prior notice. KTM accepts no liability for delivery options, deviations from illustrations and descriptions, as well as misprints and other errors. The models portrayed partly contain special equipment that does not belong to the regular scope of delivery.

© 2014 KTM-Sportmotorcycle AG, Mattighofen Austria
All rights reserved
Reproduction, even in part, as well as copying of all kinds, is permitted only with the express written permission of the copyright owner.

ISO 9001(12 100 6061)
According to the international quality management standard ISO 9001, KTM uses quality assurance processes that lead to the maximum possible quality of the products.
Issued by: TÜV Management Service

KTM-Sportmotorcycle AG
5230 Mattighofen, Austria

# TABLE OF CONTENTS




1 MEANS OF REPRESENTATION ... 5
1.1 Symbols used ... 5
1.2 Formats used ... 5
2 SAFETY ADVICE ... 6
2.1 Repair Manual ... 6
2.2 Safety advice ... 6
2.3 Degrees of risk and symbols ... 6
2.4 Work rules ... 6
3 IMPORTANT INFORMATION ... 7
3.1 Guarantee, warranty ... 7
3.2 Operating and auxiliary substances ... 7
3.3 Spare parts, accessories ... 7
3.4 Figures ... 7
4 SERIAL NUMBERS ... 8
4.1 Chassis number ... 8
4.2 Type label ... 8
4.3 Engine number ... 8
4.4 Key number ... 8
4.5 Fork part number ... 8
4.6 Shock absorber part number ... 9
5 MOTORCYCLE ... 10
5.1 Raising the motorcycle with the rear wheel stand ... 10
5.2 Taking the motorcycle off of the rear wheel stand ... 10
5.3 Raising the motorcycle with the front wheel stand ... 10
5.4 Taking the motorcycle off of the front wheel stand ... 11
5.5 Raising the motorcycle with a lift stand ... 11
5.6 Removing the motorcycle from the lift stand ... 11
5.7 Raising the motorcycle with the work stand ... 11
5.8 Removing the motorcycle from the work stand ... 12
5.9 Starting ... 12
5.10 Starting the motorcycle to make checks ... 13
6 FORK, TRIPLE CLAMP ... 14
6.1 Adjusting the compression damping of the fork ... 14
6.2 Adjusting the rebound damping of the fork ... 14
6.3 Bleeding the fork legs ... 15
6.4 Cleaning the dust boots of the fork legs ... 15
6.5 Removing the fork protector ... 15
6.6 Installing the fork protector ... 16
6.7 Removing fork legs ... 16
6.8 Installing the fork legs ... 17
6.9 Disassembling the fork legs ... 18
6.10 Checking the fork legs ... 21
6.11 Assembling the fork legs ... 22
6.12 Checking the steering head bearing play ... 26
6.13 Adjusting the steering head bearing play ... 26
7 HANDLEBAR, CONTROLS ... 28
7.1 Handlebar position ... 28
7.2 Adjusting the handlebar position ... 28
7.3 Changing the throttle grip ... 28
8 SHOCK ABSORBER, SWINGARM ... 33
8.1 Adjusting the high-speed compression damping of the shock absorber ... 33
8.2 Adjusting the low-speed compression damping of the shock absorber ... 33
8.3 Adjusting the rebound damping of the shock absorber ... 34
8.4 Measuring the unloaded rear wheel sag ... 34
8.5 Checking the static sag of the shock absorber ... 34
8.6 Checking the riding sag of the shock absorber ... 35
8.7 Adjusting the spring preload of the shock absorber ... 35
8.8 Adjusting the riding sag ... 36
8.9 Removing the shock absorber ... 36
8.10 Installing the shock absorber ... 37
8.11 Servicing the shock absorber ... 39
8.12 Removing the spring ... 39
8.13 Dismantling the damper ... 40
8.14 Disassembling the piston rod ... 41
8.15 Checking the damper ... 42
8.16 Removing the heim joint ... 43
8.17 Installing the heim joint ... 44
8.18 Assembling the piston rod ... 45
8.19 Assembling the damper ... 46
8.20 Bleeding and filling the damper ... 48
8.21 Filling the damper with nitrogen ... 50
8.22 Installing the spring ... 51
9 EXHAUST ... 53
9.1 Removing the manifold ... 53
9.2 Installing the manifold ... 54
9.3 Removing the main silencer ... 55
9.4 Installing the main silencer ... 56
10 AIR FILTER ... 57
10.1 Removing the air filter ... 57
10.2 Installing the air filter ... 57
10.3 Removing the air filter box ... 57
10.4 Installing the air filter box ... 59
11 FUEL TANK, SEAT, TRIM ... 61
11.1 Opening the filler cap ... 61
11.2 Closing filler cap ... 61
11.3 Removing the seat ... 61
11.4 Mounting the seat ... 62
11.5 Taking off the side cover ... 62
11.6 Mounting the side cover ... 62
11.7 Checking the fuel pressure ... 62
11.8 Changing the fuel filter ... 64
11.9 Changing the fuel pump ... 67
12 WHEELS ... 70
12.1 Checking the tire air pressure ... 70
12.2 Checking the tire condition ... 70
12.3 Checking the brake discs ... 71
12.4 Checking the spoke tension ... 71
12.5 Checking the rim run-out ... 72
12.6 Front wheel ... 72
12.6.1 Removing front wheel ... 72
12.6.2 Installing the front wheel ... 73
12.6.3 Removing the brake disc of the front brake ... 74
12.6.4 Installing the brake disc of the front brake ... 74
12.7 Rear wheel ... 74
12.7.1 Removing rear wheel ... 74
12.7.2 Installing the rear wheel ... 75
12.7.3 Removing the brake disc of the rear brake ... 76
12.7.4 Installing the brake disc of the rear brake ... 76
12.7.5 Checking the chain tension ... 77
12.7.6 Adjusting the chain tension ... 77
12.7.7 Adjusting chain guide ... 78
12.7.8 Checking the chain, rear sprocket, engine sprocket, and chain guide ... 78
12.7.9 Cleaning the chain ... 80
12.7.10 Checking the rear hub rubber dampers ... 80

13 WIRING HARNESS, BATTERY ... 82
13.1 Removing the battery ... 82
13.2 Installing the battery ... 82
13.3 Disconnecting the battery ... 83
13.4 Connecting the battery ... 83
13.5 Recharging the battery ... 83
13.6 Checking the charging voltage ... 84
13.7 Checking the quiescent current ... 85
13.8 Changing the main fuse ... 85
13.9 Changing fuses of individual power consumers ... 86
13.10 Adjusting the engine characteristic ... 87
14 BRAKE SYSTEM ... 89
14.1 Checking the front brake linings ... 89
14.2 Changing the brake linings of the front brake ... 89
14.3 Adjusting the basic position of the hand brake lever ... 90
14.4 Checking brake fluid level of front brake ... 90
14.5 Adding front brake fluid ... 91
14.6 Changing the front brake fluid ... 92
14.7 Checking the rear brake linings ... 93
14.8 Changing the rear brake linings ... 93
14.9 Checking the free travel of foot brake lever ... 95
14.10 Adjusting the basic position of the foot brake lever ... 95
14.11 Checking rear brake fluid level ... 95
14.12 Adding rear brake fluid ... 96
14.13 Changing the rear brake fluid ... 97
15 LIGHTING SYSTEM, INSTRUMENTS ... 99
15.1 Combination instrument ... 99
15.1.1 Setting kilometers or miles ... 99
15.1.2 Setting the clock ... 99
15.1.3 Setting/resetting display TRIP 1 ... 99
15.1.4 Setting/resetting display TRIP 2 ... 99
15.1.5 Setting the wheel circumference ... 100
15.2 Checking the headlight setting ... 101
15.3 Adjusting the headlight range ... 101
15.4 Removing the headlight mask with the headlight ... 101
15.5 Installing the headlight mask with the headlight ... 102
15.6 Changing the parking light bulb ... 102
15.7 Changing the headlight bulb ... 103
15.8 Changing the turn signal bulb ... 104
16 ENGINE ... 105
16.1 Removing the engine ... 105
16.2 Installing the engine ... 107
16.3 Disassembling the engine ... 111
16.3.1 Clamping the engine into the engine assembly stand ... 111
16.3.2 Draining the engine oil ... 111
16.3.3 Removing the starter motor ... 112
16.3.4 Removing the valve cover ... 112
16.3.5 Removing the alternator cover ... 112
16.3.6 Removing the spacer ... 112
16.3.7 Removing the gear position sensor ... 113
16.3.8 Removing the oil filter ... 113
16.3.9 Removing the thermostat ... 113
16.3.10 Setting engine to ignition top dead center ... 113
16.3.11 Removing the spark plugs ... 114
16.3.12 Removing the timing chain tensioner ... 114
16.3.13 Removing the camshafts ... 114
16.3.14 Removing the cylinder head ... 115
16.3.15 Removing the piston ... 115
16.3.16 Removing the water pump impeller ... 116
16.3.17 Removing the rotor ... 116
16.3.18 Removing the timing chain rails ... 117
16.3.19 Removing the timing chain and timing chain sprocket ... 117
16.3.20 Removing the ignition pulse generator ... 118
16.3.21 Removing the clutch cover ... 118
16.3.22 Removing the spacer and spring ... 118
16.3.23 Removing the clutch basket ... 119
16.3.24 Removing the primary gear ... 120
16.3.25 Removing the starter drive ... 120
16.3.26 Removing shift shaft ... 121
16.3.27 Removing shift drum locating ... 121
16.3.28 Removing locking lever ... 122
16.3.29 Removing the oil pumps ... 122
16.3.30 Removing the left engine case ... 123
16.3.31 Removing the crankshaft and balancer shaft ... 124
16.3.32 Removing the transmission shafts ... 124
16.4 Work on individual parts ... 125
16.4.1 Work on the right section of the engine case ... 125
16.4.2 Work on the left section of the engine case ... 126
16.4.3 Work on the clutch cover ... 128
16.4.4 Removing crankshaft bearing inner ring ... 128
16.4.5 Removing balancer shaft drive wheel ... 128
16.4.6 Changing the connecting rod, conrod bearing, and crank pin ... 128
16.4.7 Checking crankshaft run-out at bearing pin ... 130
16.4.8 Installing balancer shaft drive wheel ... 130
16.4.9 Installing crankshaft bearing inner ring ... 131
16.4.10 Measuring axial clearance of crankshaft and balancer shaft ... 131
16.4.11 Cylinder - Nikasil® coating ... 132
16.4.12 Checking/measuring the cylinder ... 132
16.4.13 Checking/measuring the piston ... 133
16.4.14 Checking piston ring end gap ... 134
16.4.15 Determining the piston/cylinder mounting clearance ... 134
16.4.16 Checking the oil pumps for wear ... 134
16.4.17 Replacing autodecompressor ... 135
16.4.18 Preparing timing chain tensioner for installation ... 136
16.4.19 Checking the timing assembly ... 137
16.4.20 Removing the rocker arm ... 138
16.4.21 Changing the camshaft bearing ... 138
16.4.22 Removing the valves ... 139
16.4.23 Checking the valves ... 140
16.4.24 Checking valve springs ... 140
16.4.25 Checking valve spring retainer ... 140
16.4.26 Checking the cylinder head ... 140
16.4.27 Installing the valves ... 141
16.4.28 Installing the rocker arm ... 142
16.4.29 Disassembling the antihopping clutch ... 142
16.4.30 Checking the clutch ... 143
16.4.31 Preassembling the antihopping clutch ... 144
16.4.32 Checking the shift mechanism ... 145
16.4.33 Preassembling the shift shaft ... 146
16.4.34 Disassembling the main shaft ... 147

16.4.35 Disassembling the countershaft ... 148
16.4.36 Checking the transmission ... 148
16.4.37 Assembling the main shaft ... 150
16.4.38 Assembling the countershaft ... 151
16.4.39 Checking the starter drive ... 152
16.4.40 Checking freewheel ... 153
16.4.41 Removing freewheel ... 153
16.4.42 Installing freewheel ... 153
16.5 Assembling the engine ... 154
16.5.1 Installing the transmission shafts ... 154
16.5.2 Installing crankshaft and balancer shaft ... 155
16.5.3 Installing the left engine case ... 156
16.5.4 Installing the oil pumps ... 157
16.5.5 Installing locking lever ... 158
16.5.6 Installing shift drum locating ... 158
16.5.7 Installing shift shaft ... 158
16.5.8 Installing the starter drive ... 158
16.5.9 Installing the primary gear ... 159
16.5.10 Installing the clutch basket ... 159
16.5.11 Installing the spacer and spring ... 161
16.5.12 Installing the clutch cover ... 161
16.5.13 Installing the ignition pulse generator ... 162
16.5.14 Installing timing chain and timing chain sprocket ... 162
16.5.15 Installing the timing chain rails ... 162
16.5.16 Installing the rotor ... 163
16.5.17 Adjusting crankshaft position sensor distance ... 163
16.5.18 Setting engine to top dead center ... 164
16.5.19 Mounting the water pump cover ... 164
16.5.20 Installing piston ... 164
16.5.21 Installing the cylinder head ... 166
16.5.22 Installing the camshafts ... 167
16.5.23 Installing timing chain tensioner ... 167
16.5.24 Checking valve clearance ... 168
16.5.25 Adjusting the valve clearance ... 169
16.5.26 Installing the spark plugs ... 170
16.5.27 Installing the thermostat ... 170
16.5.28 Installing the oil filter ... 170
16.5.29 Installing the gear position sensor ... 171
16.5.30 Installing the spacer ... 171
16.5.31 Installing the alternator cover ... 171
16.5.32 Installing oil screens ... 172
16.5.33 Installing the starter motor ... 172
16.5.34 Installing the valve cover ... 173
16.5.35 Removing the engine from the engine assembly stand ... 173
17 CLUTCH ... 174
17.1 Checking/rectifying the fluid level of the hydraulic clutch ... 174
17.2 Changing the hydraulic clutch fluid ... 174
18 SHIFT MECHANISM ... 175
18.1 Changing the gear position sensor ... 175
18.2 Programming the gear position sensor ... 177
19 WATER PUMP, COOLING SYSTEM ... 178
19.1 Draining the coolant ... 178
19.2 Filling/bleeding the cooling system ... 178
19.3 Checking the antifreeze and coolant level ... 179
19.4 Checking the coolant level ... 180
20 LUBRICATION SYSTEM ... 181
20.1 Oil circuit ... 181
20.2 Checking the engine oil level ... 181
20.3 Checking the engine oil pressure ... 182
20.4 Changing the engine oil and filter, cleaning the oil screens ... 183
20.5 Draining the engine oil ... 183
20.6 Removing the oil filter ... 184
20.7 Installing the oil filter ... 184
20.8 Cleaning the oil screens ... 185
20.9 Filling up with engine oil ... 186
20.10 Adding engine oil ... 186
21 IGNITION ... 187
21.1 Alternator - checking the stator winding ... 187
21.2 Checking the spark plug connector ... 187
21.3 Ignition coil – checking the secondary winding ... 188
22 THROTTLE VALVE BODY ... 189
22.1 Performing the initialization run ... 189
23 TECHNICAL DATA ... 190
23.1 Engine ... 190
23.2 Engine tolerance, wear limits ... 190
23.3 Engine tightening torques ... 192
23.4 Capacities ... 193
23.4.1 Engine oil ... 193
23.4.2 Coolant ... 193
23.4.3 Fuel ... 193
23.5 Chassis ... 194
23.6 Electrical system ... 194
23.7 Tires ... 195
23.8 Fork ... 195
23.9 Shock absorber ... 195
23.10 Chassis tightening torques ... 196
24 CLEANING/PROTECTIVE TREATMENT ... 198
24.1 Cleaning the motorcycle ... 198
24.2 Checks and maintenance steps for winter operation ... 199
25 STORAGE ... 200
25.1 Storage ... 200
25.2 Preparing for use after storage ... 200
26 SERVICE SCHEDULE ... 201
26.1 Service schedule ... 201
27 WIRING DIAGRAM ... 202
27.1 Page 01 of 11 ... 202
27.2 Page 02 of 11 ... 204
27.3 Page 03 of 11 ... 206
27.4 Page 04 of 11 ... 208
27.5 Page 05 of 11 ... 210
27.6 Page 06 of 11 ... 212
27.7 Page 07 of 11 ... 214
27.8 Page 08 of 11 ... 216
27.9 Page 09 of 11 ... 218
27.10 Page 10 of 11 ... 220
27.11 Page 11 of 11 ... 222
28 SUBSTANCES ... 224
29 AUXILIARY SUBSTANCES ... 226
30 SPECIAL TOOLS ... 228
31 STANDARDS ... 241
INDEX ... 242

# 1 MEANS OF REPRESENTATION



## 1.1 Symbols used

The meaning of specific symbols is described below.

| | |
|---|---|
| ✓ | Indicates an expected reaction (e.g. of a work step or a function). |
| ✗ | Indicates an unexpected reaction (e.g. of a work step or a function). |
| ☛ | Indicates a page reference (more information is provided on the specified page). |
| i | Indicates information with more details or tips. |
| » | Indicates the result of a testing step. |
| V | Denotes a voltage measurement. |
| A | Denotes a current measurement. |
| Ω | Denotes a resistance measurement. |

## 1.2 Formats used

The typographical formats used in this document are explained below.

| | |
|---|---|
| **Proprietary name** | Identifies a proprietary name. |
| **Name®** | Identifies a protected name. |
| **Brand™** | Identifies a trademark. |

# 2 SAFETY ADVICE

## 2.1 Repair Manual

Read this Repair Manual carefully and thoroughly before beginning work. It contains useful information and tips that will help you repair and maintain your vehicle.
This manual assumes that the necessary special KTM tools and KTM workplace and workshop equipment are available.

## 2.2 Safety advice

A number of safety instructions need to be followed to operate the vehicle safely. Therefore, read this manual carefully. The safety instructions are highlighted in the text and are referred to at the relevant passages.

**Info**
The vehicle has various information and warning labels at prominent locations. Do not remove information/warning labels. If they are missing, you or others may not recognize dangers and may therefore be injured.

## 2.3 Degrees of risk and symbols

**Danger**
Identifies a danger that will immediately and invariably lead to fatal or serious permanent injury if the appropriate measures are not taken.

**Warning**
Identifies a danger that is likely to lead to fatal or serious injury if the appropriate measures are not taken.

**Caution**
Identifies a danger that may lead to minor injuries if the appropriate measures are not taken.

**Note**
Identifies a danger that will lead to considerable machine and material damage if the appropriate measures are not taken.

**Warning**
Identifies a danger that will lead to environmental damage if the appropriate measures are not taken.

## 2.4 Work rules

Special tools are necessary for certain tasks. The tools are not contained in the vehicle but can be ordered under the number in parentheses. E.g.: bearing puller (15112017000)
During assembly, non-reusable parts (e.g. self-locking screws and nuts, seals and seal rings, O-rings, pins, lock washers) must be replaced by new parts.
In some instances, a thread locker (e.g. **Loctite®**) is required. The manufacturer instructions for use must be followed.
After disassembly, clean the parts that are to be reused and check them for damage and wear. Change damaged or worn parts.
After you complete the repair or service work, check the operating safety of the vehicle.

# 3 IMPORTANT INFORMATION



## 3.1 Guarantee, warranty

The work prescribed in the service schedule must be carried out by an authorized KTM workshop only and confirmed in the customer's Service & Warranty Booklet and in the **KTM dealer.net**; otherwise, all warranty claims will be void. No warranty claims can be considered for damage resulting from manipulations and/or alterations to the vehicle.
Additional information on the guarantee or warranty and the procedures involved can be found in the Service & Warranty Booklet.

## 3.2 Operating and auxiliary substances

**Warning**

**Environmental hazard** Improper handling of fuel is a danger to the environment.

– Do not allow fuel to get into the ground water, the ground, or the sewage system.

Use the operating and auxiliary substances (such as fuel and lubricants) as specified in the manual.

## 3.3 Spare parts, accessories

Only use spare parts and accessories approved and/or recommended by KTM. KTM accepts no liability for other products and any resulting damage or loss.

The current **KTM PowerParts** for your vehicle can be found on the KTM website.
International KTM Website: http://www.ktm.com

## 3.4 Figures

The figures contained in the manual may depict special equipment.
In the interest of clarity, some components may be shown disassembled or may not be shown at all. It is not always necessary to disassemble the component to perform the activity in question. Please follow the instructions in the text.

# 4 SERIAL NUMBERS

## 4.1 Chassis number

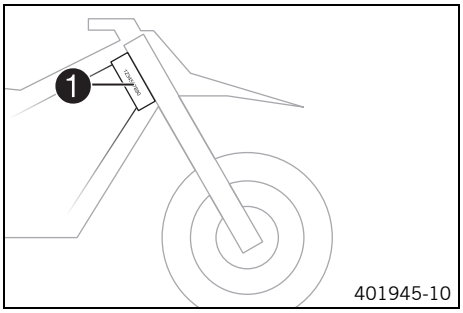


The chassis number ❶ is stamped on the steering head on the right.

## 4.2 Type label

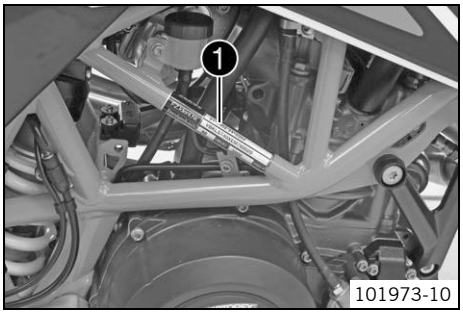


The type label ❶ is located on the right side of the frame.

## 4.3 Engine number

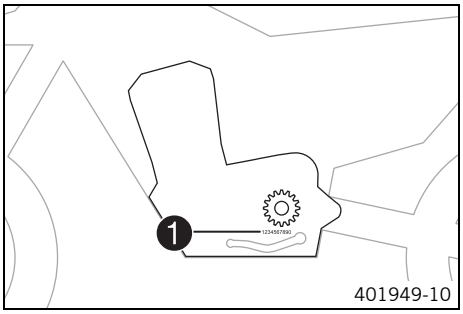


The engine number ❶ is stamped on the left side of the engine under the engine sprocket.

## 4.4 Key number

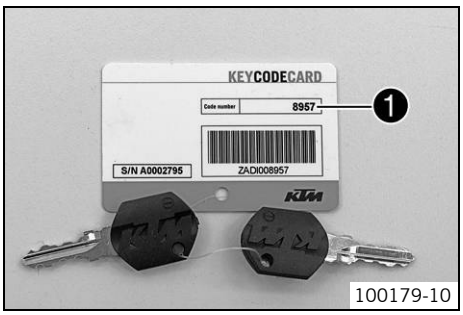


The key number ❶ can be found on the **KEYCODECARD**.

**Info**
You need the key number to order a spare key. Keep the **KEYCODECARD** in a safe place.

## 4.5 Fork part number

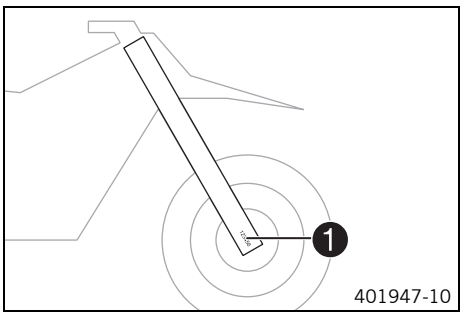


The fork part number ❶ is stamped on the inner side of the fork stub.

## 4.6 Shock absorber part number

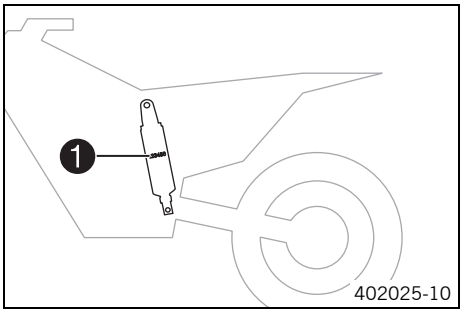


The shock absorber part number ❶ is on the left of the shock absorber.

## 5.1 Raising the motorcycle with the rear wheel stand

**Note**

**Danger of damage** The parked vehicle may roll away or fall over.

– Always place the vehicle on a firm and even surface.

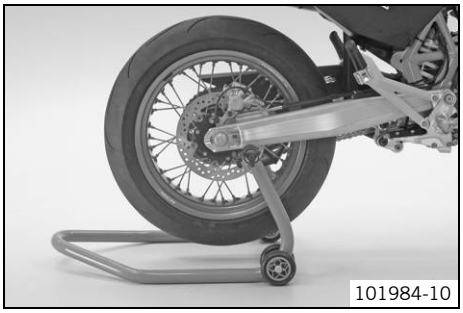
101984-10

– Insert the adapter into the rear wheel stand and screw into the swingarm on both sides.

| |
|---|
| Adapter (61029055110) (☛ p. 231) |
| Rear wheel stand (61029055400) (☛ p. 231) |

– Position the motorcycle upright, align the stand and raise the motorcycle.

## 5.2 Taking the motorcycle off of the rear wheel stand

**Note**

**Danger of damage** The parked vehicle may roll away or fall over.

– Always place the vehicle on a firm and even surface.

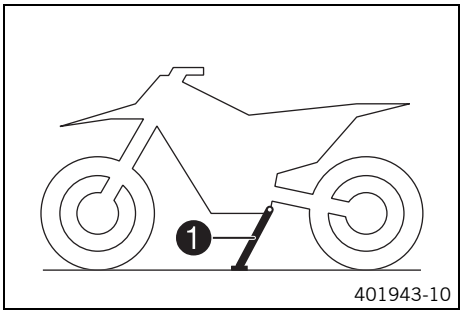

401943-10

– Secure the motorcycle against falling over.
– Remove the rear wheel stand and lean the vehicle on the side stand.

## 5.3 Raising the motorcycle with the front wheel stand

**Note**

**Danger of damage** The parked vehicle may roll away or fall over.

– Always place the vehicle on a firm and even surface.

**Preparatory work**

– Raise the motorcycle with the rear wheel stand. (☛ p. 10)

**Main work**

– Move the handlebar to the straight-ahead position. Align the front wheel stand with the fork legs using the adapters.

| |
|---|
| Front wheel stand (61029055300) (☛ p. 231) |

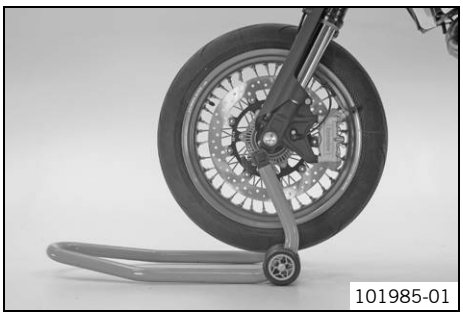
101985-01

**Info**
Always raise the rear of the motorcycle first.

– Raise the front of the motorcycle.

## 5.4 Taking the motorcycle off of the front wheel stand

**Note**

**Danger of damage** The parked vehicle may roll away or fall over.

– Always place the vehicle on a firm and even surface.

– Secure the motorcycle against falling over.
– Remove the front wheel stand.

## 5.5 Raising the motorcycle with a lift stand

**Note**

**Danger of damage** The parked vehicle may roll away or fall over.

– Always place the vehicle on a firm and even surface.

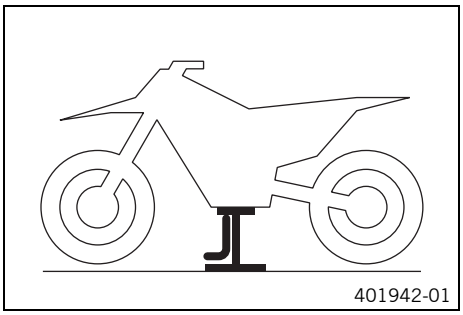


– Stand the motorcycle upright on a level surface.
– Raise the motorcycle in the area of the footrest bracket.
– Secure the motorcycle against falling over.

## 5.6 Removing the motorcycle from the lift stand

**Note**

**Danger of damage** The parked vehicle may roll away or fall over.

– Always place the vehicle on a firm and even surface.

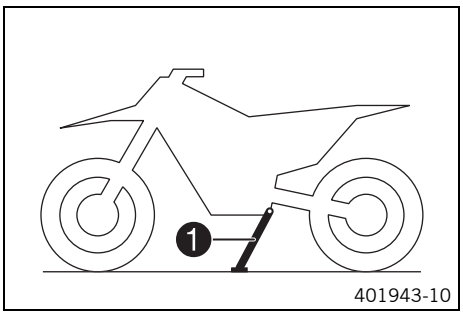


– Remove the motorcycle from the lift stand and rest it on its side stand.
– Remove the lift stand.

## 5.7 Raising the motorcycle with the work stand

**Note**

**Danger of damage** The parked vehicle may roll away or fall over.

– Always place the vehicle on a firm and even surface.

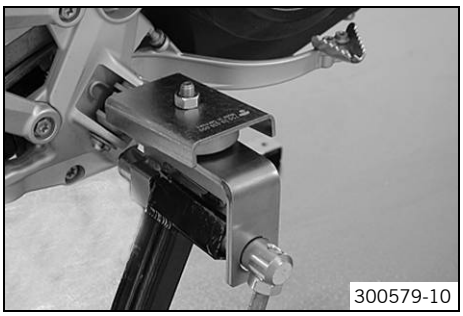


– Mount the special tool on the footrest.

| |
|---|
| Work stand adapter (75029036000) (☛ p. 234) |

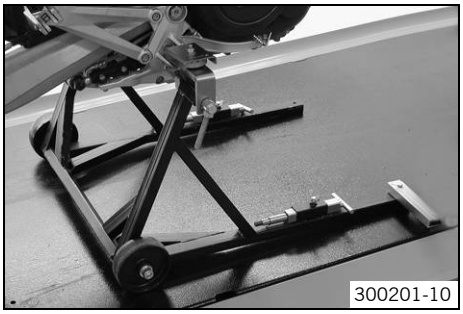


– Position the motorcycle upright, align the special tool and raise the motorcycle.

Work stand (62529055000) (☛ p. 232)

## 5.8 Removing the motorcycle from the work stand

**Note**

**Danger of damage** The parked vehicle may roll away or fall over.

– Always place the vehicle on a firm and even surface.

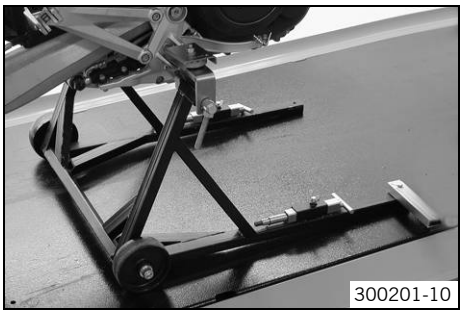


– Secure the motorcycle against falling over.
– Remove the work stand and lean the vehicle on the side stand.

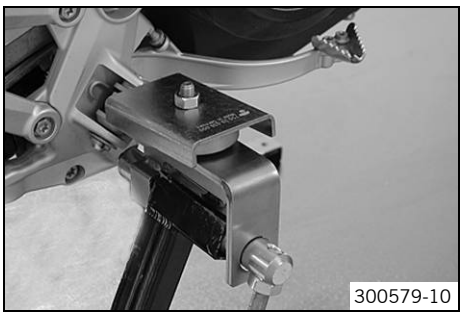


– Remove the special tool.

## 5.9 Starting

**Danger**

**Danger of poisoning** Exhaust gases are toxic and inhaling them may result in unconsciousness and/or death.

– When running the engine, always make sure there is sufficient ventilation, and do not start or run the engine in an enclosed space without an effective exhaust extraction system.

**Caution**

**Danger of accidents** If the vehicle is operated with a discharged battery or without a battery, electronic components and safety equipment may be damaged.

– Never operate the vehicle with a discharged battery or without a battery.

**Note**

**Engine failure** High engine speeds in cold engines have a negative effect on the service life of the engine.

– Always warm up the engine at low engine speeds.

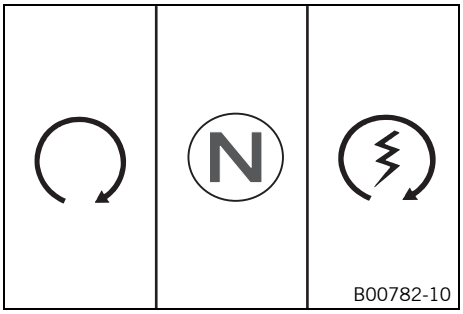


– Turn the emergency OFF switch to the position ○.
– Switch on the ignition by turning the ignition key to position **ON** ○.
  ✔ After you switch on the ignition, you can hear the fuel pump working for about two seconds. The function check of the combination instrument is run at the same time.
  ✔ The ABS warning lamp lights up and goes back out after starting off.
– Shift gear to neutral.
  ✔ The green idling speed indicator lamp **N** lights up.
– Press the electric starter button ⓢ.

**Info**
Do not press the electric starter button until the combination instrument function check is finished.
When starting, **DO NOT** open the throttle. If you open the throttle during the starting procedure, fuel is not injected by the engine management system and the engine cannot start.
Press the starter for a maximum of 5 seconds. Wait for at least 5 seconds before trying again.
This motorcycle is equipped with a safety starting system. You can only start the engine if the transmission is in neutral or if the clutch lever is pulled when a gear is engaged. If the side stand is folded out and you shift into gear and release the clutch lever, the engine stops.

– Take the weight off the side stand and swing it back up with your foot as far as it will go.

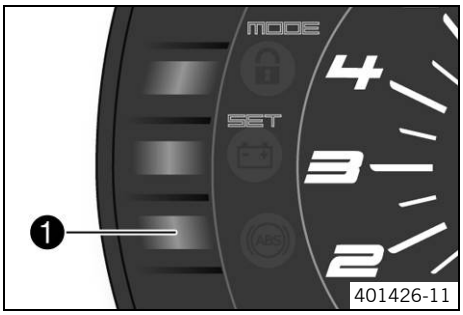


**Switching off ABS**
KTM recommends riding with ABS at all times. However, situations may arise in which ABS is not advantageous.

**Condition**
Vehicle stationary, engine running.
– Press the ❶ button for 3 - 5 seconds.
  ✔ The ABS warning lamp starts flashing; ABS is deactivated.

## 5.10 Starting the motorcycle to make checks

**Danger**
**Danger of poisoning** Exhaust gases are toxic and inhaling them may result in unconsciousness and/or death.
– When running the engine, always make sure there is sufficient ventilation, and do not start or run the engine in an enclosed space without an effective exhaust extraction system.

**Info**
Press the starter for a maximum of 5 seconds. Wait for a least 5 seconds before trying again.

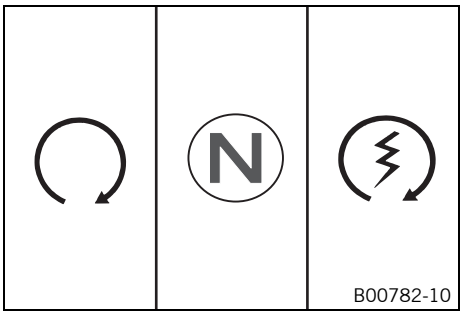


– Turn the emergency OFF switch to the position ○.
– Shift gear to neutral.
– Switch on the ignition.
– Press the electric starter button ⓢ.

**Info**
Do not open the throttle.

## 6.1 Adjusting the compression damping of the fork

**Info**
The hydraulic compression damping determines the fork suspension behavior.

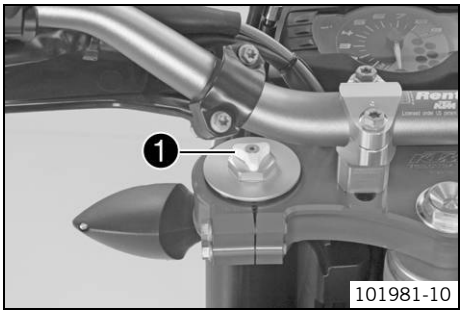


– Turn the white adjusting screw ❶ all the way clockwise.

**Info**
Adjusting screw ❶ is located at the upper end of the left fork leg.
The compression damping is located in the left fork leg **COMP** (white adjusting screw). The rebound damping is located in the right fork leg **REB** (red adjusting screw).

– Turn back counterclockwise by the number of clicks corresponding to the fork type.

Guideline

| Compression damping | |
|---|---|
| Comfort | 20 clicks |
| Standard | 15 clicks |
| Sport | 10 clicks |
| Full payload | 10 clicks |

**Info**
Turn clockwise to increase damping; turn counterclockwise to reduce damping.

## 6.2 Adjusting the rebound damping of the fork

**Info**
The hydraulic rebound damping determines the fork rebound behavior.

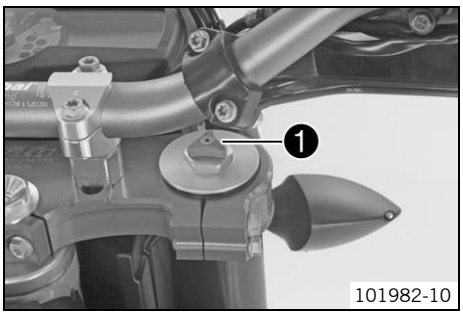


– Turn the red adjusting screw ❶ all the way clockwise.

**Info**
Adjusting screw ❶ is located at the upper end of the right fork leg.
The rebound damping is located in the right fork leg **REB** (red adjusting screw). The compression damping is located in the left fork leg **COMP** (white adjusting screw).

– Turn back counterclockwise by the number of clicks corresponding to the fork type.

Guideline

| Rebound damping | |
|---|---|
| Comfort | 20 clicks |
| Standard | 15 clicks |
| Sport | 10 clicks |
| Full payload | 10 clicks |

**Info**
Turn clockwise to increase damping; turn counterclockwise to reduce damping.

## 6.3 Bleeding the fork legs

**Preparatory work**

– Lean the motorcycle on the side stand.

**Main work**

– Loosen bleeder screw ❶.

✔ Any excess pressure escapes from the interior of the fork.

– Mount and tighten bleeder screws.

**Info**

Carry out this action on both fork legs.

## 6.4 Cleaning the dust boots of the fork legs

**Preparatory work**

– Raise the motorcycle with a lift stand. (☛ p. 11)

– Remove the fork protector. (☛ p. 15)

**Main work**

– Push dust boots ❶ on both fork legs downward.

**Info**

The dust boots remove dust and coarse dirt particles from the inside fork tubes. Over time, dirt can penetrate behind the dust boots. If this dirt is not removed, the oil seals behind the dust boots can start to leak.

**Warning**

**Danger of accidents** Reduced braking efficiency due to oil or grease on the brake discs.

– Always keep the brake discs free of oil and grease, and clean them with brake cleaner when necessary.

– Clean and oil the dust boots and inside fork tube of both fork legs.

| Universal oil spray (☛ p. 227) |
|---|

– Push the dust boots back into their normal position.

– Remove excess oil.

**Finishing work**

– Install the fork protector. (☛ p. 16)

– Remove the motorcycle from the lift stand. (☛ p. 11)

## 6.5 Removing the fork protector

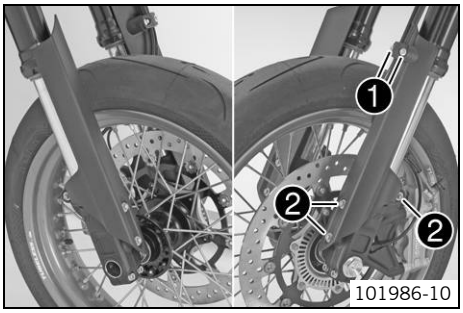


– Remove screws ❶ and take off clamp.

– Remove screws ❷ on left fork leg. Remove the fork protector.

– Remove the screws on the right fork leg. Remove the fork protector.

## 6.6 Installing the fork protector

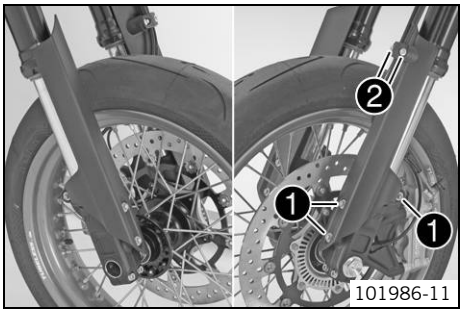


– Position the fork protection on the left fork leg. Mount and tighten screws ❶.

Guideline

| | | |
|---|---|---|
| Remaining screws, chassis | M6 | 10 Nm (7.4 lbf ft) |

– Position the brake line and cable harness. Put the clamp on, mount and tighten screws ❷.
– Position the fork protection on the right fork leg. Mount and tighten the screws.

Guideline

| | | |
|---|---|---|
| Remaining screws, chassis | M6 | 10 Nm (7.4 lbf ft) |

## 6.7 Removing fork legs

**Preparatory work**

– Raise the motorcycle with the work stand. (☛ p. 11)
– Tie the rear of the vehicle down.

**Main work**

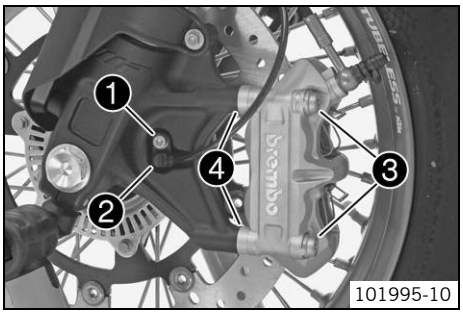


– Remove screw ❶ and pull wheel speed sensor ❷ out of the hole.
– Remove screws ❸ and spacers ❹.
– Press back the brake linings with a light lateral tilting of the brake caliper on the brake disc. Pull the brake caliper carefully back from the brake disc and hang it to one side.

**Info**
Do not pull the handbrake lever when the brake caliper is removed.

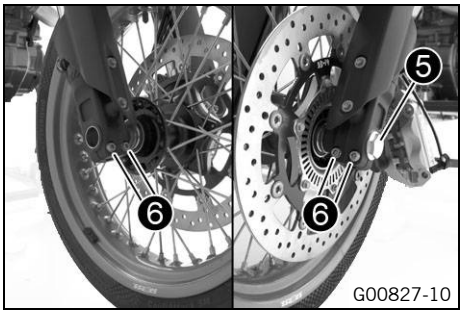


– Loosen screw ❺ and screws ❻.
– Unscrew screw ❺ about 6 turns and press your hand on the screw to push the wheel spindle out of the axle clamp. Remove screw ❺.

**Warning**
**Danger of accidents** Reduced braking effect caused by damaged brake discs.
– Always lay the wheel down in such a way that the brake discs are not damaged.

– Holding the front wheel, withdraw the wheel spindle. Take the front wheel out of the fork.

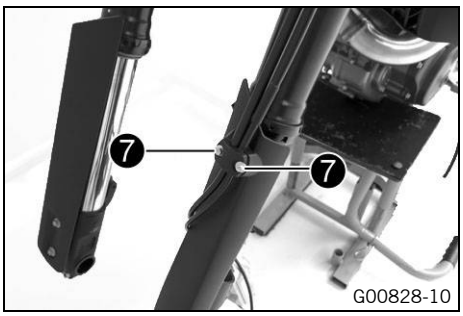


– Remove screws ❼ and the clamp. Take the brake line and wiring harness out of the holder.

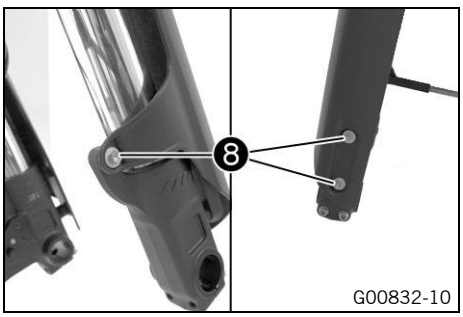


– Remove screws ❽. Take off the fork protector.

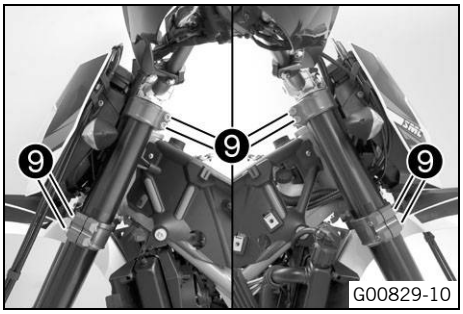


– Loosen the screws ❾ of the triple clamp. Remove the fork legs from the bottom.

## 6.8 Installing the fork legs

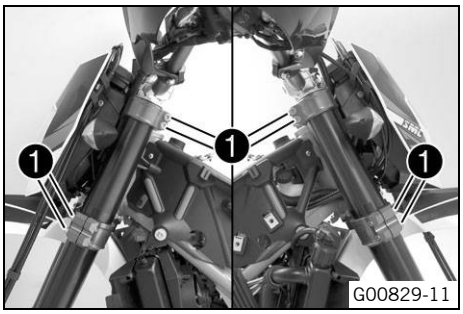


– Slide the fork legs into the triple clamps on both sides.

**Info**
The bleeder screws must face forwards.
The topmost milled groove in the fork leg must be flush with the top edge of the upper triple clamp.
The upper fork projection must be the same on both sides.

– Tighten screws ❶ on both sides.

Guideline

| | | |
|---|---|---|
| Screw, top triple clamp | M8 | 17 Nm (12.5 lbf ft) |
| Screw, bottom triple clamp | M8 | 12 Nm (8.9 lbf ft) |

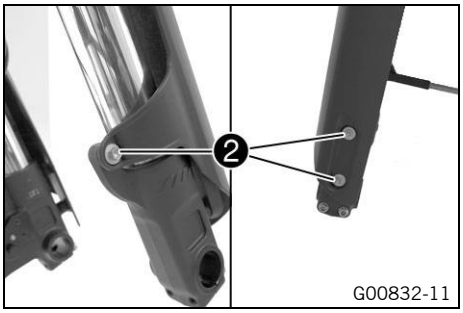


– Position the fork protection. Mount and tighten screws ❷.

Guideline

| | | |
|---|---|---|
| Remaining screws, chassis | M6 | 10 Nm (7.4 lbf ft) |

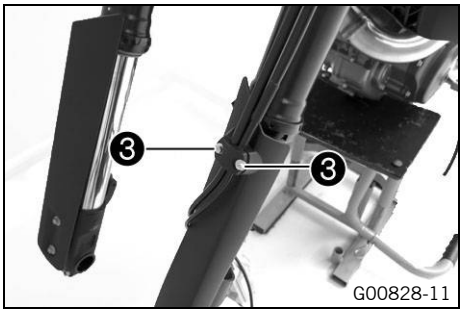


– Position the brake line, wiring harness and clamp.
– Mount and tighten screws ❸.

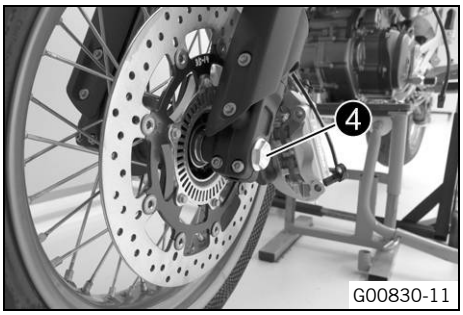


**Warning**
**Danger of accidents** Reduced braking efficiency due to oil or grease on the brake discs.
– Always keep the brake discs free of oil and grease, and clean them with brake cleaner when necessary.

– Clean screw ❹ and the wheel spindle.
– Position the front wheel and insert the wheel spindle.
✔ The brake linings are correctly positioned.
– Mount and tighten screw ❹.

Guideline

| | | |
|---|---|---|
| Screw, front wheel spindle | M24x1.5 | 45 Nm (33.2 lbf ft) |

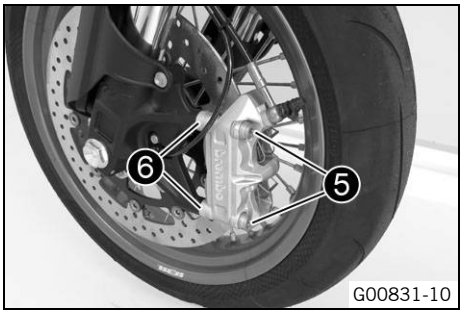


- Position the brake caliper and check that the brake linings are seated correctly.
- Mount screws ❺ with spacers ❻ but do not tighten.
- Operate the hand brake lever repeatedly until the brake linings lie on the brake disc and there is a pressure point. Fix the hand brake lever in the activated position.
  ✔ The brake caliper straightens.
- Tighten screws ❺.

  Guideline

| | | | |
|---|---|---|---|
| Screw, front brake caliper | M10x1.25 | 45 Nm (33.2 lbf ft) | **Loctite® 243™** |

- Remove the fixation of the hand brake lever.
- Unload the rear of the vehicle.
- Remove the motorcycle from the work stand. (☛ p. 12)

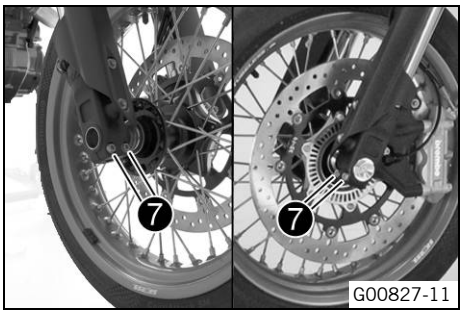


- Pull the front brake and compress the fork powerfully a few times.
  ✔ The fork legs straighten.
- Tighten screws ❼.

  Guideline

| | | |
|---|---|---|
| Screw, fork stub | M8 | 15 Nm (11.1 lbf ft) |

## 6.9 Disassembling the fork legs

**Info**
These operations are the same on both fork legs.

**Condition**
The fork legs have been removed.

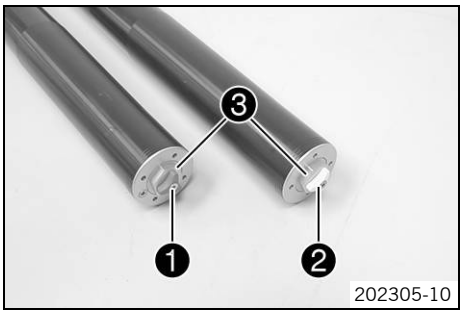


- Note down the current state of the rebound ❶ and compression damping ❷.
- Note down the current spring preload ❸.
- Completely open the adjusters of the rebound damping, compression damping, and spring preload.

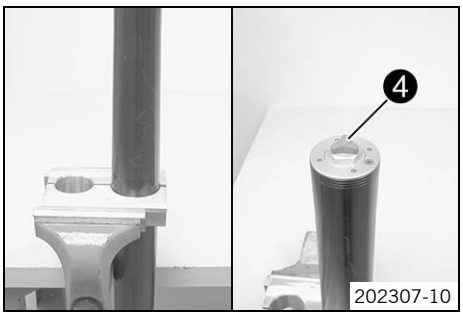


- Clamp the fork leg in the area of the lower triple clamp.

| |
|---|
| Clamping stand (T1403S) (☛ p. 240) |

- Remove adjuster ❹.

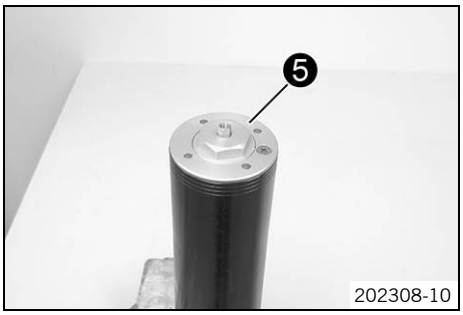


- Release **Preload Adjuster** ❺.

| |
|---|
| Pin wrench (T103) (☛ p. 237) |

**Info**
The **Preload Adjuster** cannot be removed yet.

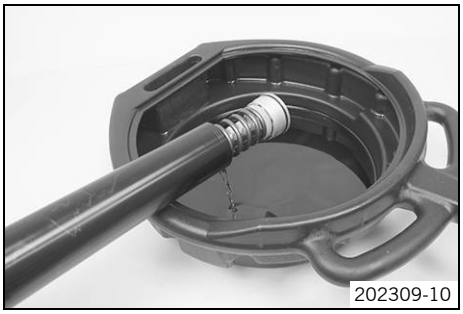
202309-10

– Drain the fork oil.

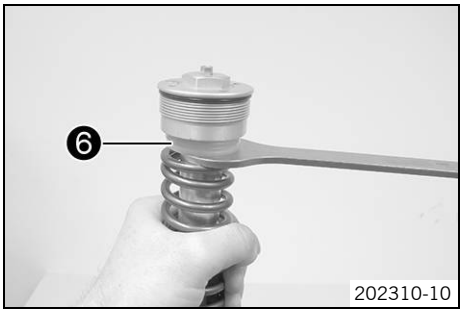

202310-10

– Clamp the fork leg with the axle clamp.

**Info**
Use soft jaws.

– Slide the outer tube down.
– Pull the spring downwards. Mount the special tool on the hexagonal part.

Open-end wrench (T14032) (☛ p. 239)

**Info**
Preload spacers ❻ should be above the special tool.

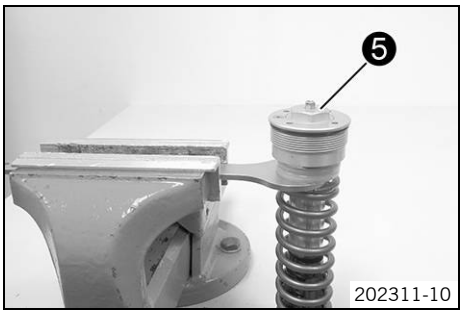

202311-10

– Clamp the special tool in the vise. Release **Preload Adjuster** ❺.

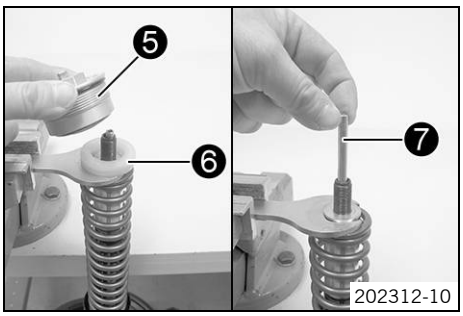

202312-10

– Remove **Preload Adjuster** ❺ with preload spacers ❻.
– Remove adjusting tube ❼.

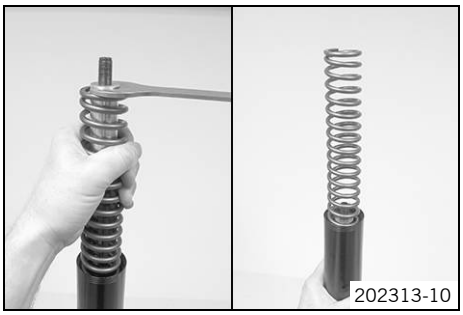
202313-10

– Pull the spring downwards. Remove the special tool.
– Remove the spring.

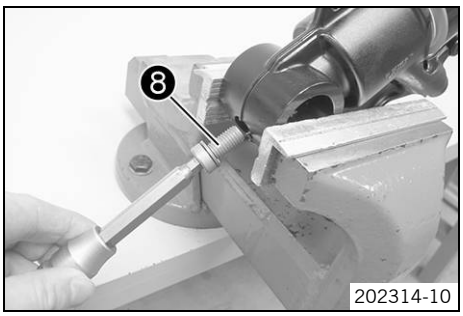

202314-10

– Clamp the fork leg with the axle clamp.
Guideline

Use soft jaws.

– Remove screw ❽ of the cartridge.

**Info**
Place a container underneath to catch any oil that may run out.

202315-10

– Remove the cartridge.

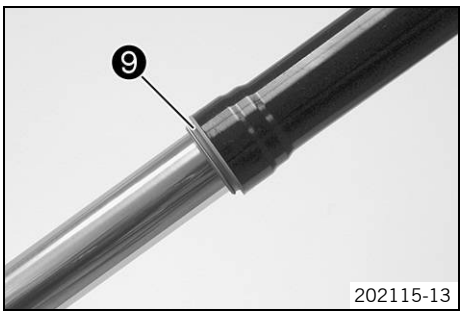

202115-13

– Remove dust boot ❾.

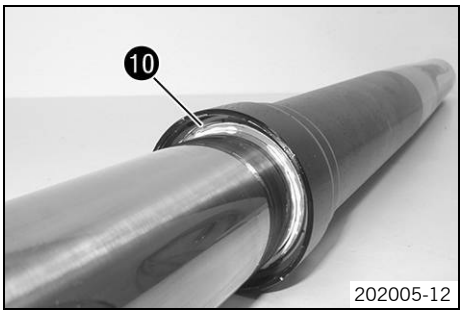

202005-12

– Remove lock ring ❿.

> **Info**
> The lock ring has a beveled end where a screwdriver can be applied.

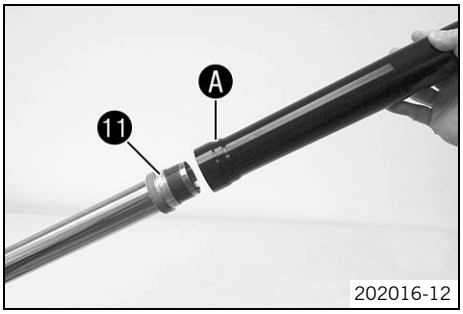

202016-12

– Heat up the outer tube in area Ⓐ of the lower sliding bushing.
Guideline

| |
|---|
| 50 °C (122 °F) |

– Pull the outer tube from the inner tube with a jerk.

> **Info**
> The lower sliding bushing ⓫ must be pulled from its bearing seat.

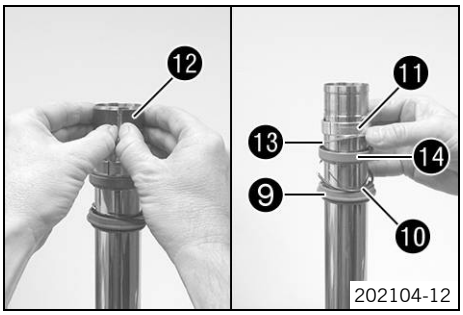

202104-12

– Remove the upper sliding bushing ⓬.

> **Info**
> Without using a tool, carefully pull the stack apart by hand.

– Take off the lower sliding bushing ⓫.
– Take off support ring ⓭.
– Take off seal ring ⓮.
– Take off lock ring ❿.
– Take off dust boot ❾.
– Unclamp the fork leg.

## 6.10 Checking the fork legs

**Condition**
Fork disassembled.

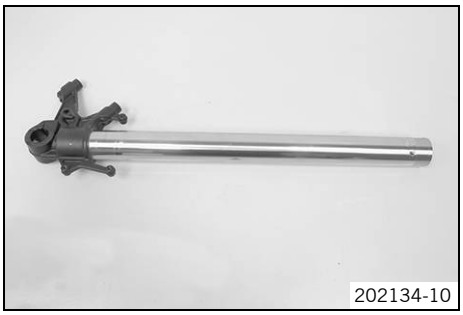
202134-10

– Check the inner tube and axle clamp for damage.
  » If there is damage:
    – Change the inner tube.

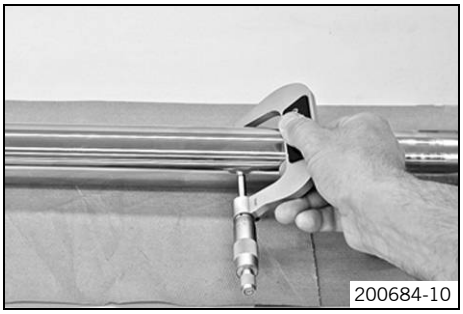
200684-10

– Measure the outside diameter at several locations on the inner tube.

| | |
|---|---|
| Outside diameter of inner tube | 47.975… 48.005 mm (1.88878… 1.88996 in) |

  » If the measured value is less than the specified value:
    – Change the inner tube.

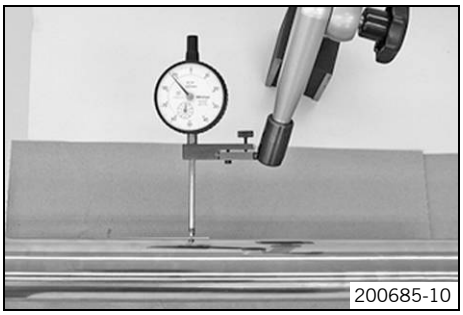
200685-10

– Measure the run-out of the inner tube.

| | |
|---|---|
| Run-out of inner tube | ≤ 0.20 mm (≤ 0.0079 in) |

  » If the measured value is greater than the specified value:
    – Change the inner tube.

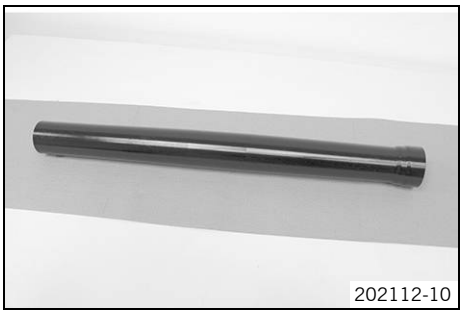
202112-10

– Check the outer tube for damage.
  » If there is damage:
    – Change the outer tube.

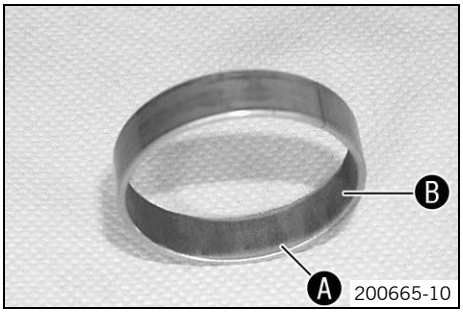

200665-10

– Check the surface of the sliding bushings.
  » If the bronze-colored layer Ⓐ under the sliding layer Ⓑ is visible:
    – Replace the sliding bushings.

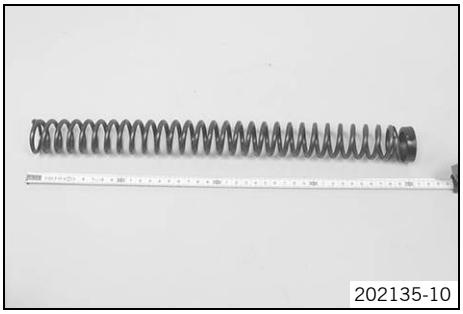
202135-10

– Check the spring length.

Guideline

| | |
|---|---|
| Spring length with preload spacer(s) | 463 mm (18.23 in) |

» If the measured value is greater than the specified value:
  – Reduce the thickness of the preload spacers.
» If the measured value is less than the specified value:
  – Increase the thickness of the preload spacers.

## 6.11 Assembling the fork legs

**Info**
These operations are the same on both fork legs.

**Preparatory work**
– Check the fork legs. (☛ p. 21)

**Main work**
– Clamp the inner tube with the axle clamp.
– Install the special tool.

| |
|---|
| Protecting sleeve (T1401) (☛ p. 239) |

– Grease and push on dust boot ❶.

| |
|---|
| Lubricant (T511) (☛ p. 226) |

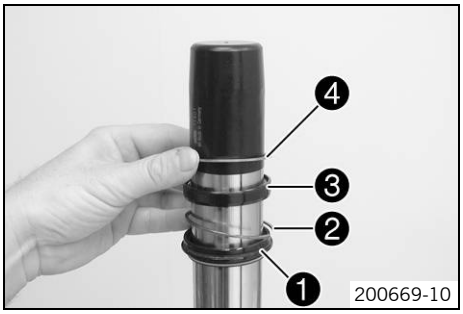

200669-10

**Info**
Always replace the dust boot, lock ring, seal ring, and support ring.
Install the dust boot with the sealing lip and spring expander facing downward.

– Push on lock ring ❷.
– Grease and push on seal ring ❸.

| |
|---|
| Lubricant (T511) (☛ p. 226) |

**Info**
Sealing lip downward, open side upward.

– Push on support ring ❹.
– Remove the special tool.
– Sand the edges of the sliding bushings with 600-grain sandpaper, then clean and grease them.

| |
|---|
| Fork oil (SAE 4) (48601166S1) (☛ p. 225) |

200670-10

– Push on the lower sliding bushing ❺.
– Mount the upper sliding bushing ❻.

**Info**
Without using a tool, carefully pull the stack apart by hand.

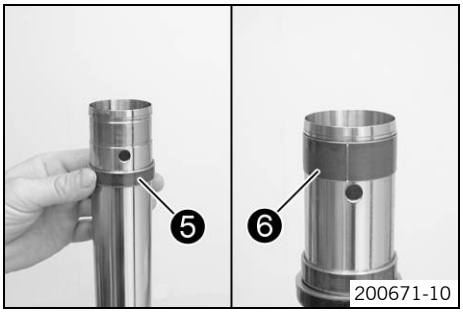

200671-10

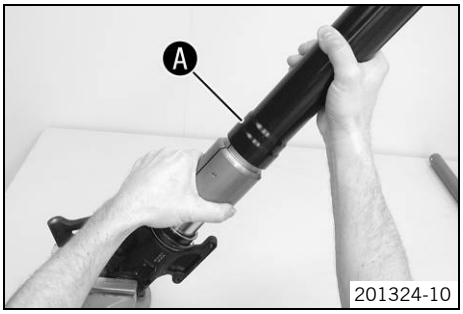


– Heat up the outer tube in area Ⓐ of the lower sliding bushing.

Guideline

| |
|---|
| 50 °C (122 °F) |

– Slide the outer tube onto the inner tube.
– Hold the lower sliding bushing with the longer side of the special tool.

| |
|---|
| Mounting tool (T14040S) (☛ p. 240) |

– Push the sliding bushing all the way into the outer tube.

– Position the support ring.
– Hold the seal ring with the shorter side of the special tool.

| |
|---|
| Mounting tool (T14040S) (☛ p. 240) |

– Push the seal ring and support ring all the way into the outer tube.

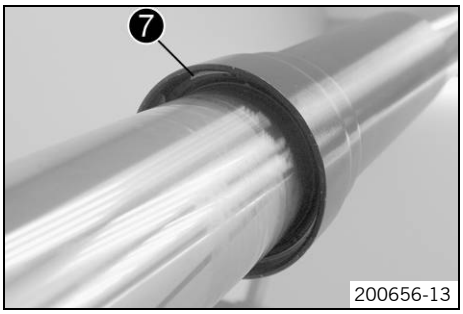


– Mount lock ring ❼.

**Info**
The lock ring must engage audibly.

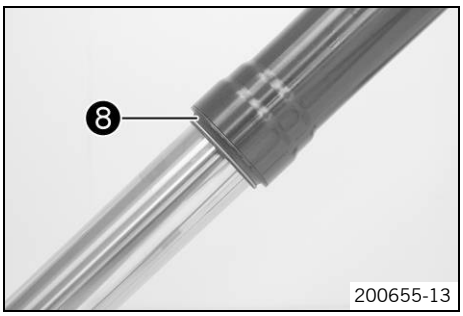


– Install dust boot ❽.

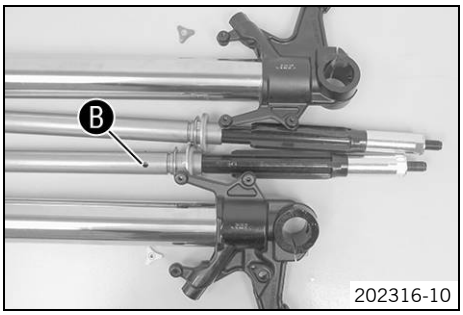


– Assemble related individual components accordingly.

**Info**
Compression damping side: cartridge with additional oil holes Ⓑ, white adjuster, axle clamp marked **L**.
Rebound damping side: cartridge without additional oil holes, red adjuster, axle clamp marked **R**.

– Mount cartridge.

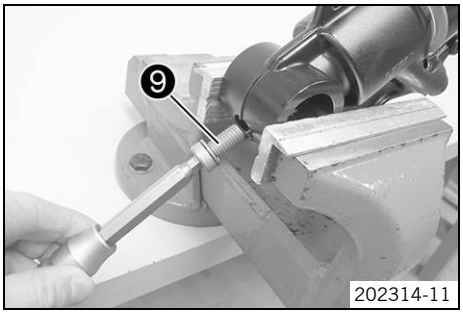


– Mount and tighten screw 9 of the cartridge.

Guideline

| | | |
|---|---|---|
| Screw, cartridge | M12x1 | 25 Nm<br>(18.4 lbf ft) |

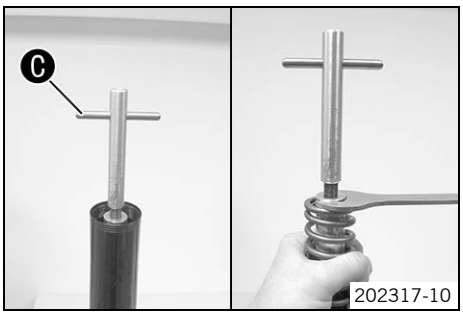


– Mount special tool on the cartridge; remove pin C of the special tool.

| |
|---|
| Gripping tool (T14026S1) (☛ p. 239) |

– Pull out the piston rod. Mount the spring. Mount the pin again.
– Pull up cartridge with special tool. Pull the spring downward and slide the special tool onto the hexagonal piece.

| |
|---|
| Open-end wrench (T14032) (☛ p. 239) |

– Remove the special tool.

| |
|---|
| Gripping tool (T14026S1) (☛ p. 239) |

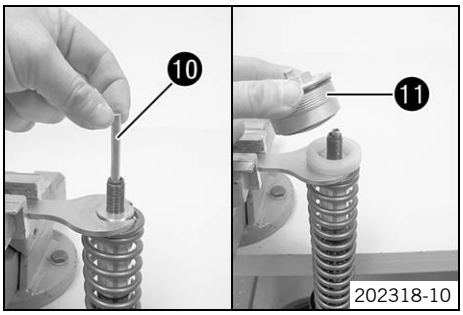


– Clamp the special tool in the vise.
– Mount adjusting tube 10.
  ✓ The adjusting tube protrudes 5 mm (0.197 in) from the cartridge and can be pressed in against the resistance of the spring.
  ✗ The adjusting tube protrudes more than 7 mm (0.275 in) from the cartridge and cannot be pressed in against the resistance of the spring.
– Lubricate the thread of the piston rod.

| |
|---|
| Lubricant (T159) (☛ p. 226) |

– Lubricate the upper edge of the piston rod.

| |
|---|
| Lubricant (T158) (☛ p. 226) |

– Screw the **Preload Adjuster** 11 with the preload spacers onto the piston rod.

**Info**
The **Preload Adjuster** must reach the stop before the piston rod begins turning as well. If the piston rod thread is stiff, the rod must be held to prevent it from turning. If the **Preload Adjuster** is not screwed in all the way, the rebound adjustment will not function properly.

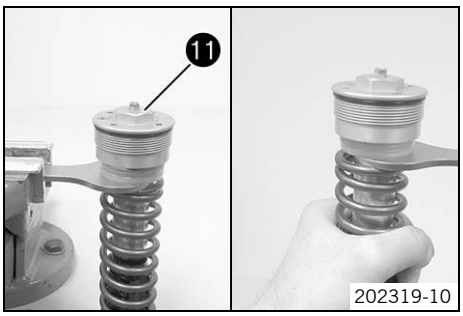


– Tighten **Preload Adjuster** 11.

Guideline

| | | |
|---|---|---|
| Nut, piston rod on screw cover | M12x1 | 25 Nm<br>(18.4 lbf ft) |

– Release the special tool. Pull the spring downwards. Remove the special tool.

– Clamp the fork vertically.
– Add fork oil.

| | | |
|---|---|---|
| Fork oil per fork leg | 625 ml<br>(21.13 fl. oz.) | Fork oil (SAE 4) (48601166S1)<br>(☛ p. 225) |

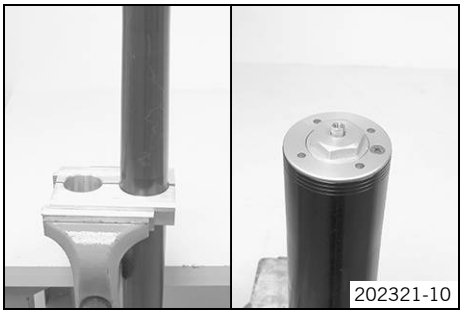
202321-10

– Push the outer tube upward.
– Clamp the fork in the area of the lower triple clamp.

| |
|---|
| Clamping stand (T1403S) (☛ p. 240) |

– Lubricate the O-ring of the **Preload Adjuster**.

| |
|---|
| Lubricant (T511) (☛ p. 226) |

– Screw on the **Preload Adjuster** and tighten.

Guideline

| | | |
|---|---|---|
| Screw cover on outer tube | M47x1.5 | 40 Nm<br>(29.5 lbf ft) |

| |
|---|
| Pin wrench (T103) (☛ p. 237) |

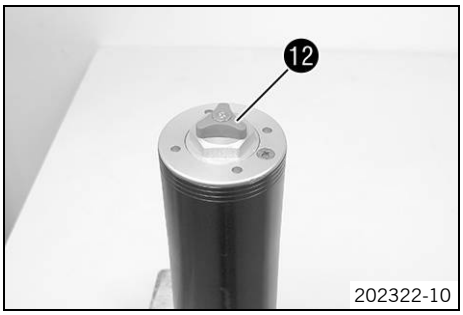

202322-10

– Mount adjuster ⓬; mount and tighten the screw.

Guideline

| | | |
|---|---|---|
| Adapter | M4x0.5 | 1.5 Nm<br>(1.11 lbf ft) |

**Info**
Compression damping side: white adjuster, axle clamp marked **L**.
Rebound damping side: red adjuster, axle clamp marked **R**.

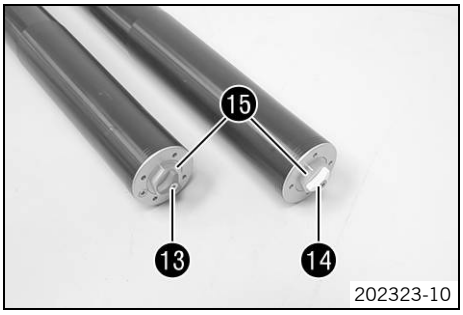

202323-10

**Alternative 1**

– Turn the adjusting screw of rebound damping ⓭ and the adjusting screw of compression damping ⓮ clockwise as far as possible.
– Turn back counterclockwise by the number of clicks corresponding to the fork leg type.

Guideline

| | |
|---|---|
| Rebound damping | |
| Comfort | 20 clicks |
| Standard | 15 clicks |
| Sport | 10 clicks |
| Full payload | 10 clicks |
| Compression damping | |
| Comfort | 20 clicks |
| Standard | 15 clicks |
| Sport | 10 clicks |
| Full payload | 10 clicks |

– Turn spring preload ⓯ clockwise all the way.
– Turn back counterclockwise by the number of turns corresponding to the fork leg type.

Guideline

| | |
|---|---|
| Spring preload - **Preload Adjuster** | |
| Comfort | 2 turns |
| Standard | 5 turns |
| Sport | 5 turns |
| Full payload | 8 turns |

**Alternative 2**

**Warning**

**Danger of accidents** Modifications to the suspension settings can seriously alter the vehicle's ride behavior.

- Extreme modifications to the adjustment of the suspension components can cause a serious deterioration in the handling characteristics and overload some components.
- Only make adjustments within the recommended range.
- After making adjustments, ride slowly at first to get the feel of the new ride behavior.

- Return the adjusting screws to the position determined when the unit was disassembled.

## 6.12 Checking the steering head bearing play

**Warning**

**Danger of accidents** Unstable vehicle handling from incorrect steering head bearing play.

- Adjust the steering head bearing play without delay.

**Info**

If the bike is ridden with play in the steering head bearing, the bearing and the bearing seats in the frame can become damaged over time.

**Preparatory work**

- Raise the motorcycle with the work stand. (☛ p. 11)
- Push down the rear of vehicle, tighten it down in this position, and secure the motorcycle against falling over.
  - ✔ The front wheel is no longer in contact with the ground and the fork legs are no longer under tension.

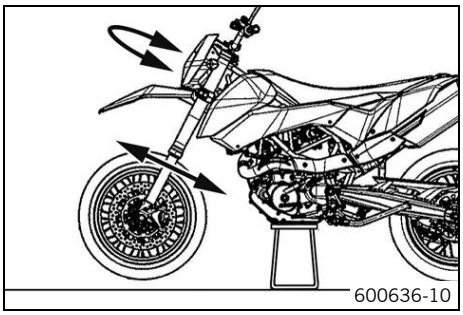
600636-10

**Main work**

- Move the handlebar to the straight-ahead position. Move the fork legs to and fro in the direction of travel.

  No play should be noticeable in the steering head bearing.

  » If there is noticeable play present:
    - Adjust the play of the steering head bearing. (☛ p. 26)
- Move the handlebar to and fro over the entire steering range.

  The handlebar must be able to move easily over the entire steering range. No resting locations should be noticeable.

  » If click positions are noticeable:
    - Adjust the play of the steering head bearing. (☛ p. 26)
    - Check the steering head bearing and change if necessary.

**Finishing work**

- Release the rear of the vehicle.
- Remove the motorcycle from the work stand. (☛ p. 12)

## 6.13 Adjusting the steering head bearing play

**Preparatory work**

- Raise the motorcycle with the work stand. (☛ p. 11)
- Push down the rear of vehicle, tighten it down in this position, and secure the motorcycle against falling over.
  - ✔ The front wheel is no longer in contact with the ground and the fork legs are no longer under tension.

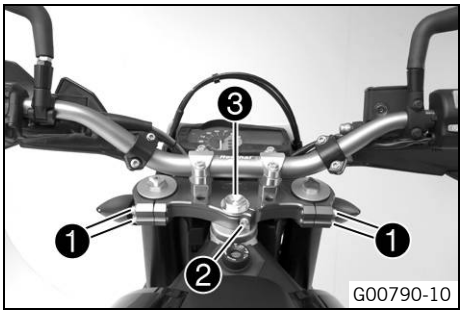


**Main work**

– Loosen screws ❶. Remove screw ❷.
– Loosen and retighten screw ❸.

Guideline

| | | |
|---|---|---|
| Screw, top steering head | M20x1.5 | 12 Nm (8.9 lbf ft) |

– Using a plastic hammer, tap lightly on the upper triple clamp to avoid strains.
– Fully tighten screw ❶.

Guideline

| | | |
|---|---|---|
| Screw, top triple clamp | M8 | 17 Nm (12.5 lbf ft) |

– Mount and tighten screw ❷.

Guideline

| | | |
|---|---|---|
| Screw, steering stem | M8 | 20 Nm (14.8 lbf ft) |

**Finishing work**

– Check the steering head bearing play. (☛ p. 26)
– Release the rear of the vehicle.
– Remove the motorcycle from the work stand. (☛ p. 12)

## 7.1 Handlebar position

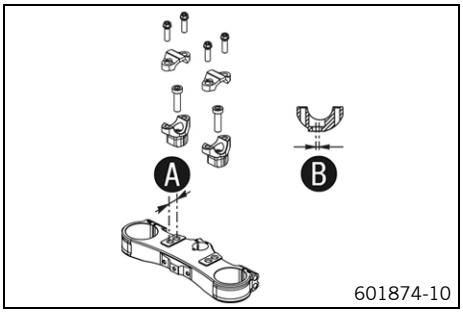


In the upper triple clamp, there are 2 drill holes separated by a distance of Ⓐ.

| | |
|---|---|
| Hole distance Ⓐ | 15 mm (0.59 in) |

The drill holes on the handlebar holder are centered and separated by a distance of Ⓑ.

| | |
|---|---|
| Hole distance Ⓑ | 3.5 mm (0.138 in) |

The handlebar can be mounted in 4 different positions. In this way, the handlebar can be mounted in the position that is most comfortable for the rider.

## 7.2 Adjusting the handlebar position

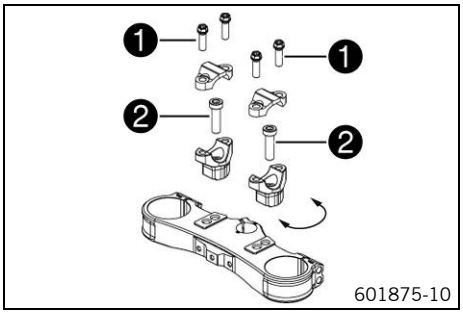


– Remove the four screws ❶. Remove the handlebar clamps. Take off the handlebar and set it aside.

**Info**
Cover the motorcycle and attachments to protect them from damage.
Do not kink the cables and lines.

– Remove the two screws ❷. Take off the handlebar holder.
– Move the handlebar holder to the desired position. Mount and tighten the two screws ❷.

Guideline

| | | | |
|---|---|---|---|
| Screw, handlebar support | M10 | 40 Nm (29.5 lbf ft) | **Loctite® 243™** |

**Info**
Position the handlebar holders evenly on the left and right.

– Position the handlebar.

**Info**
Ensure that the cables and lines are routed correctly.

– Position the handlebar clamps. Mount and evenly tighten the four screws ❶.

Guideline

| | | |
|---|---|---|
| Screw, handlebar clamp | M8 | 20 Nm (14.8 lbf ft) |

## 7.3 Changing the throttle grip

**Preparatory work**
– Switch off all power consumers and switch off the engine.
– Remove the headlight mask with the headlight. (☛ p. 101)
– Remove the seat. (☛ p. 61)

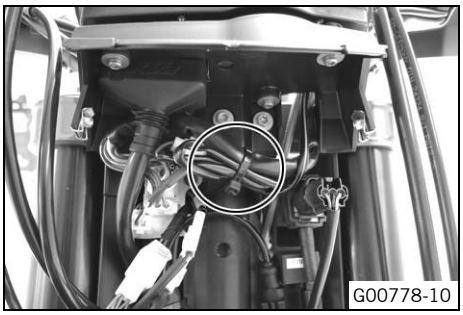


**Main work**
– Remove the cable binder.

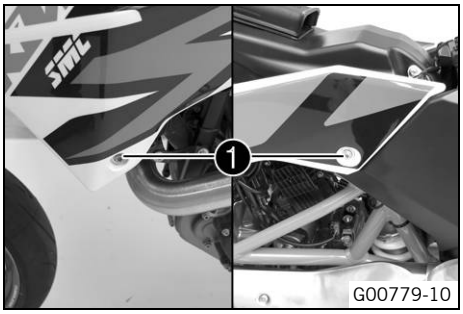


– Remove screws ❶. Take off the side cover.

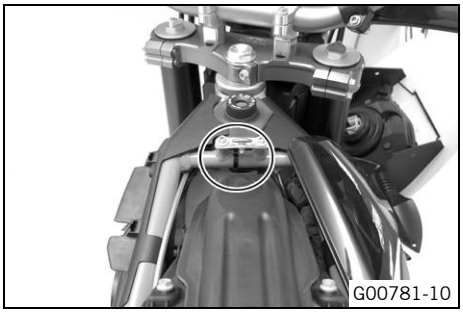


– Remove the cable binder.

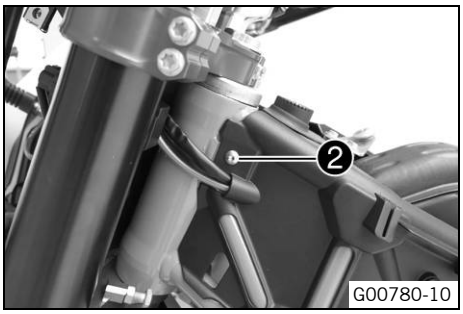


– Remove screw ❷.
– Push the trim aside.

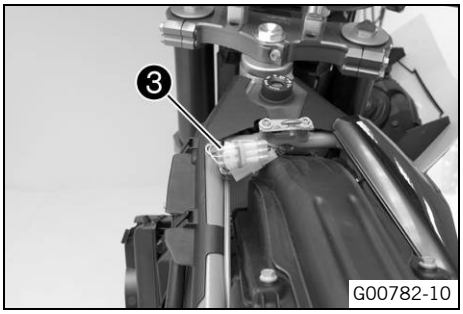


– Disconnect plug-in connector ❸.
– Expose the cable of the accelerator position sensor.

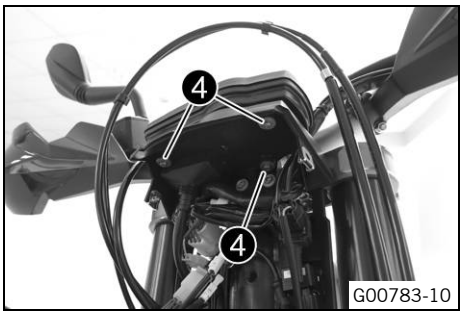


– Remove screws ❹.
– Take the combination instrument up out of the holder and hang to the side.

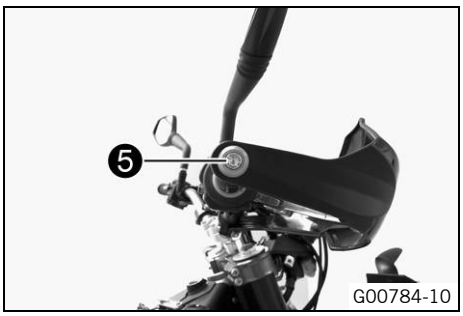


– Loosen screw ❺.

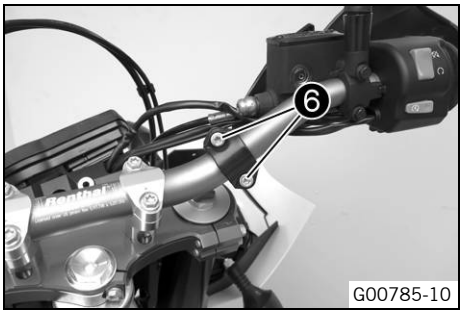


– Remove screws ❻.
– Take off the handlebar guard.

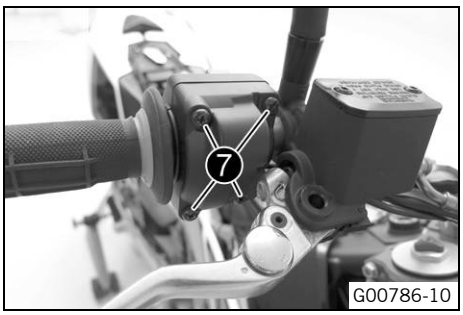


– Remove screws ❼.

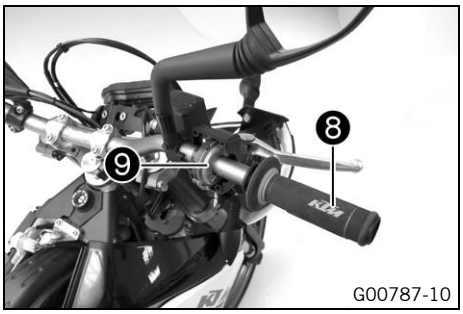


– Pull throttle grip ❽ and accelerator position sensor ❾ from the handlebar.

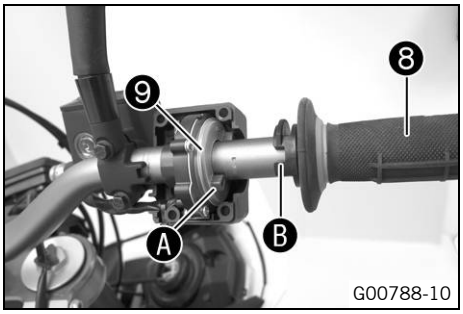


– Position throttle grip ❽ and accelerator position sensor ❾ on the handlebar.
✔ Catch Ⓐ engages in driver Ⓑ.

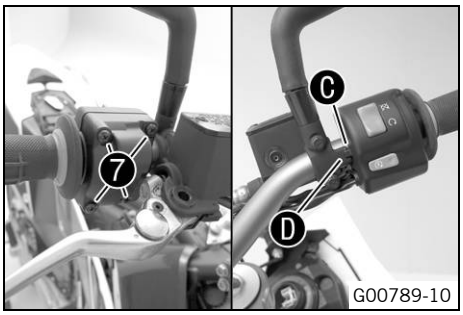


– Mount and tighten screws ❼.
Guideline

| | | |
|---|---|---|
| Screw, throttle grip | M5 | 3.5 Nm (2.58 lbf ft) |

✔ Catch Ⓒ engages in recess Ⓓ.

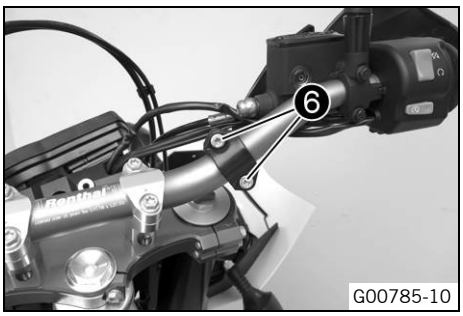


– Position the handlebar guard.
– Mount and tighten screws ❻.
Guideline

| | | |
|---|---|---|
| Remaining screws, chassis | M6 | 10 Nm (7.4 lbf ft) |

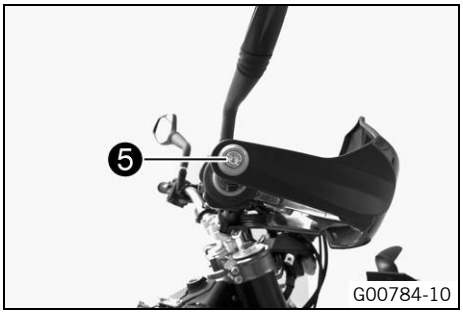


– Tighten screw ❺.

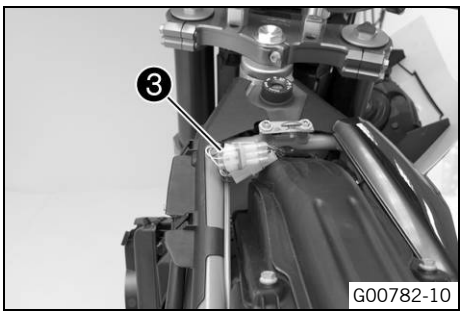


– Connect plug-in connector ❸.
– Route the wiring harness of the accelerator position sensor without tension.

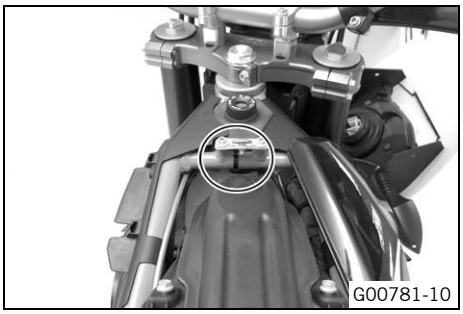


– Secure the cable with the cable binders.

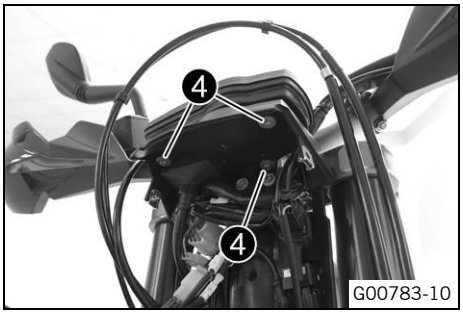


– Position the combination instrument in the holder.
– Mount and tighten screws ❹.

Guideline

| | | |
|---|---|---|
| Remaining screws, chassis | M4 | 4 Nm (3 lbf ft) |

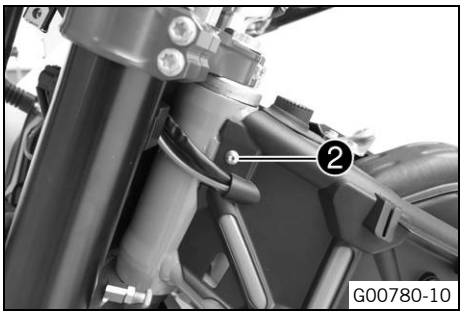


– Mount and tighten screw ❷.

Guideline

| | | |
|---|---|---|
| Remaining screws, chassis | M4 | 4 Nm (3 lbf ft) |

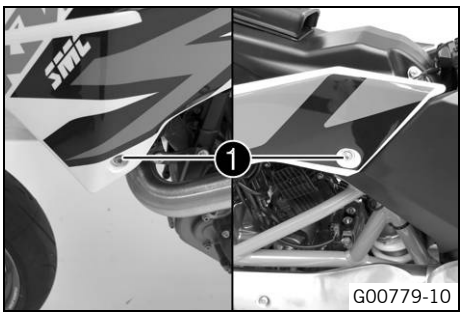


– Position the side cover.
– Mount and tighten screws ❶.

Guideline

| | | |
|---|---|---|
| Remaining screws, chassis | M6 | 10 Nm (7.4 lbf ft) |

– Secure the cable with the cable binder.

**Finishing work**

– Install the headlight mask with the headlight. (☛ p. 102)
– Check the headlight setting. (☛ p. 101)
– Reset the control unit engine electronics KHRS.
– Program the gear position sensor. (☛ p. 177)
– Mount the seat. (☛ p. 62)

## 8.1 Adjusting the high-speed compression damping of the shock absorber

**Caution**

**Danger of accidents** Disassembly of pressurized parts can lead to injury.

– The shock absorber is filled with high density nitrogen. Adhere to the description provided.

**Info**

The high-speed setting takes effect during the fast compression of the shock absorber.

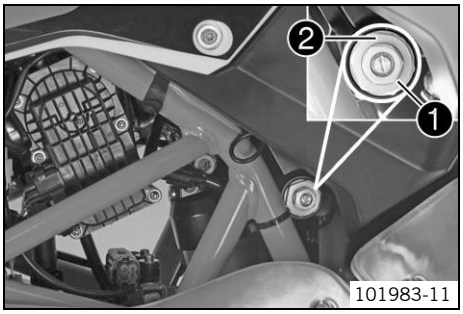


– Turn adjusting screw ❶ clockwise all the way using a socket wrench.

**Info**

Do not loosen fitting ❷!

– Turn back counterclockwise by the number of turns corresponding to the shock absorber type.

Guideline

| Compression damping, high-speed | |
|---|---|
| Comfort | 2 turns |
| Standard | 1.5 turns |
| Sport | 1 turn |
| Full payload | 1 turn |

**Info**

Turn clockwise to increase damping; turn counterclockwise to reduce damping.

## 8.2 Adjusting the low-speed compression damping of the shock absorber

**Caution**

**Danger of accidents** Disassembly of pressurized parts can lead to injury.

– The shock absorber is filled with high density nitrogen. Adhere to the description provided.

**Info**

The low-speed setting takes effect during the slow to normal compression of the shock absorber.

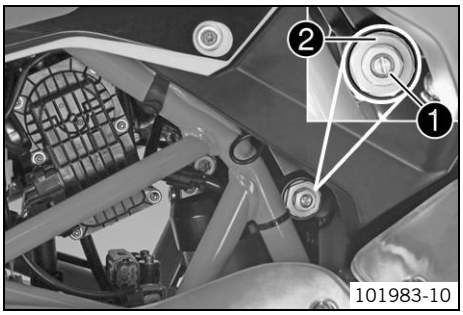


– Turn adjusting screw ❶ clockwise with a screwdriver up to the last perceptible click.

**Info**

Do not loosen fitting ❷!

– Turn back counterclockwise by the number of clicks corresponding to the shock absorber type.

Guideline

| Compression damping, low-speed | |
|---|---|
| Comfort | 25 clicks |
| Standard | 20 clicks |
| Sport | 15 clicks |
| Full load capacity | 15 clicks |

**Info**

Turn clockwise to increase damping; turn counterclockwise to reduce damping.

## 8.3 Adjusting the rebound damping of the shock absorber

**Caution**

**Danger of accidents** Disassembly of pressurized parts can lead to injury.

– The shock absorber is filled with high density nitrogen. Adhere to the description provided.

– Turn adjusting screw ❶ clockwise up to the last perceptible click.
– Turn back counterclockwise by the number of clicks corresponding to the shock absorber type.

Guideline

| Rebound damping | |
|---|---|
| Comfort | 20 clicks |
| Standard | 15 clicks |
| Sport | 10 clicks |
| Full payload | 10 clicks |

**Info**

Turn clockwise to increase damping; turn counterclockwise to reduce damping.

## 8.4 Measuring the unloaded rear wheel sag

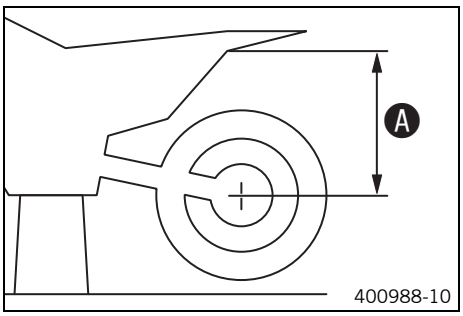


**Preparatory work**

– Raise the motorcycle with a lift stand. (☛ p. 11)

**Main work**

– Measure the distance – as vertical as possible – between the rear axle and a fixed point, for example, a mark on the side cover.
– Note down the value as dimension Ⓐ.

**Finishing work**

– Remove the motorcycle from the lift stand. (☛ p. 11)

## 8.5 Checking the static sag of the shock absorber

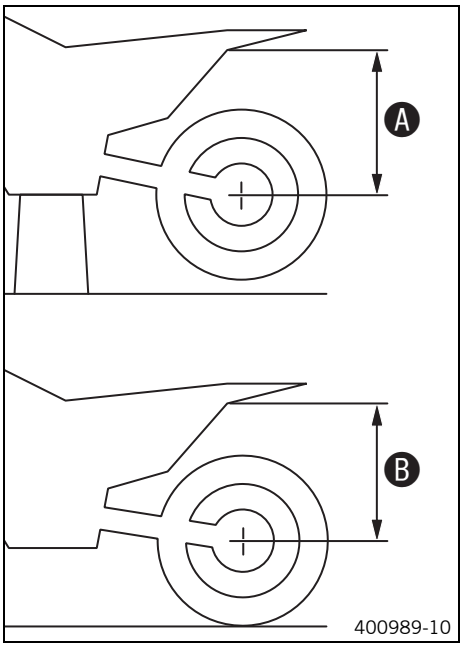


– Measure distance Ⓐ of rear wheel unloaded. (☛ p. 34)
– Hold the motorcycle upright with the aid of an assistant.
– Measure the distance between the rear axle and the fixed point again.
– Note down the value as dimension Ⓑ.

**Info**

The static sag is the difference between measurements Ⓐ and Ⓑ.

– Check the static sag.

| Static sag | 20… 25 mm (0.79… 0.98 in) |
|---|---|

» If the static sag is less or more than the specified value:
  – Adjust the spring preload of the shock absorber. (☛ p. 35)

## 8.6 Checking the riding sag of the shock absorber

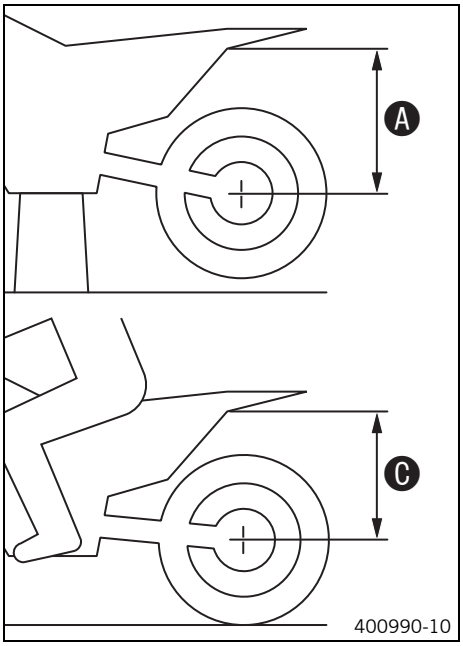


- Measure distance A of rear wheel unloaded. (☛ p. 34)
- With another person holding the motorcycle, the rider, wearing full protective clothing, sits on the seat in a normal sitting position (feet on footrests) and bounces up and down a few times.
  ✔ The rear wheel suspension levels out.
- Another person now measures the distance between the rear axle and a fixed point.
- Note down the value as dimension C.

**Info**
The riding sag is the difference between measurements A and C.

- Check the riding sag.

| | |
|---|---|
| Riding sag | 70… 80 mm (2.76… 3.15 in) |

» If the riding sag differs from the specified measurement:
  - Adjust the riding sag. (☛ p. 36)

## 8.7 Adjusting the spring preload of the shock absorber

**Caution**
**Danger of accidents** Disassembly of pressurized parts can lead to injury.
- The shock absorber is filled with high density nitrogen. Adhere to the description provided.

**Info**
Before changing the spring preload, make a note of the present setting, e.g., by measuring the length of the spring.

**Preparatory work**
- Raise the motorcycle with the work stand. (☛ p. 11)
- Remove the seat. (☛ p. 61)
- Take off the side cover. (☛ p. 62)
- Remove the shock absorber. (☛ p. 36)
- After removing the shock absorber, clean it thoroughly.

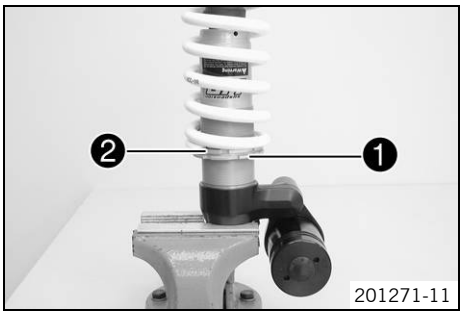


**Main work**
- Loosen retaining ring 1.
- Turn adjusting ring 2 until the spring is no longer under tension.

| |
|---|
| Hook wrench (T106S) (☛ p. 238) |

- Measure the overall spring length without a load.
- Tension the spring by turning adjusting ring 2 to the prescribed value.
  Guideline

| | |
|---|---|
| Spring preload | 20 mm (0.79 in) |

**Info**
Depending on the static sag and/or the riding sag, it may be necessary to increase or decrease the spring preload.

- Tighten retaining ring 1.

**Finishing work**
- Install the shock absorber. (☛ p. 37)
- Mount the side cover. (☛ p. 62)
- Mount the seat. (☛ p. 62)
- Remove the motorcycle from the work stand. (☛ p. 12)

## 8.8 Adjusting the riding sag

**Preparatory work**

- Raise the motorcycle with the work stand. (☛ p. 11)
- Remove the seat. (☛ p. 61)
- Take off the side cover. (☛ p. 62)
- Remove the shock absorber. (☛ p. 36)
- After removing the shock absorber, clean it thoroughly.

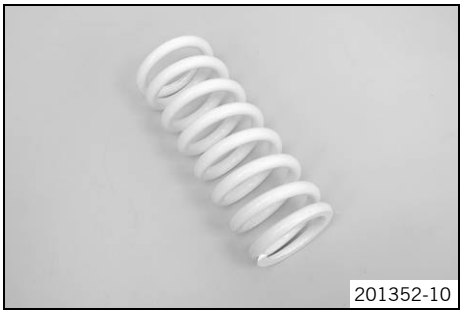
201352-10

**Main work**

- Choose and mount a suitable spring.

  Guideline

| Spring rate | |
|---|---|
| Medium (standard) | 80 N/mm (457 lb/in) |
| Hard | 85 N/mm (485 lb/in) |

**Info**
The spring rate is shown on the outside of the spring.

**Finishing work**

- Install the shock absorber. (☛ p. 37)
- Mount the side cover. (☛ p. 62)
- Mount the seat. (☛ p. 62)
- Remove the motorcycle from the work stand. (☛ p. 12)
- Check the static sag of the shock absorber. (☛ p. 34)
- Adjust the rebound damping of the shock absorber. (☛ p. 34)

## 8.9 Removing the shock absorber

**Preparatory work**

- Raise the motorcycle with the work stand. (☛ p. 11)
- Remove the seat. (☛ p. 61)
- Take off the side cover. (☛ p. 62)

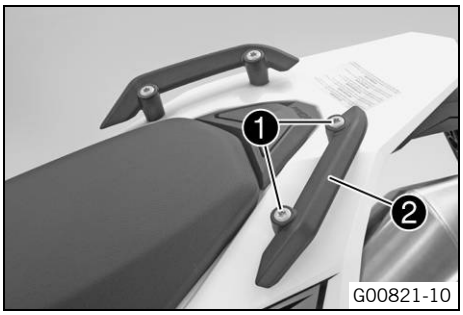

G00821-10

**Main work**

- Remove screws ❶.
- Take off grab handle ❷.

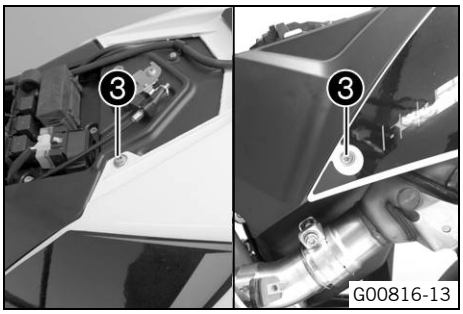

G00816-13

- Remove screws ❸.

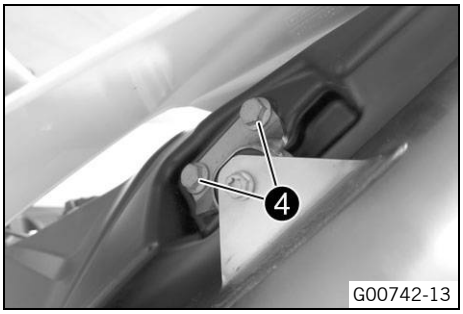


- Lift the rear fairing.
- Remove screws ❹.

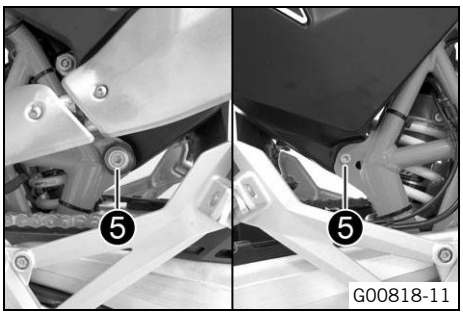


- Remove screws ❺.

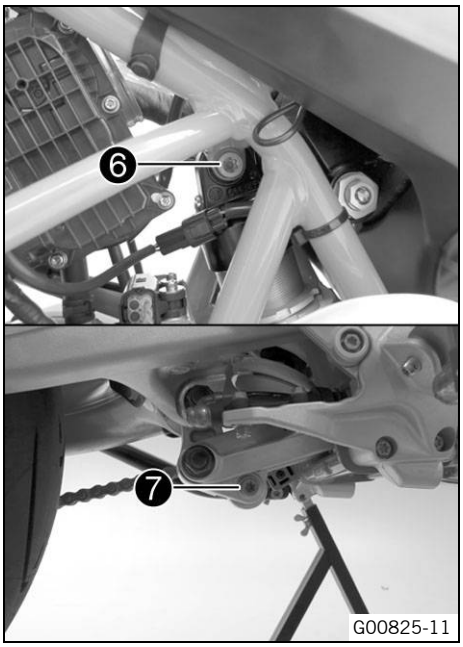


- Loosen screw ❻.
- Remove screw ❼.
- Remove screw ❻.

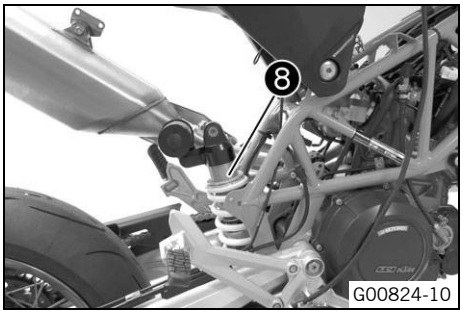


- Fold the rear upward.
- Take out shock absorber ❽ toward the top.

## 8.10 Installing the shock absorber

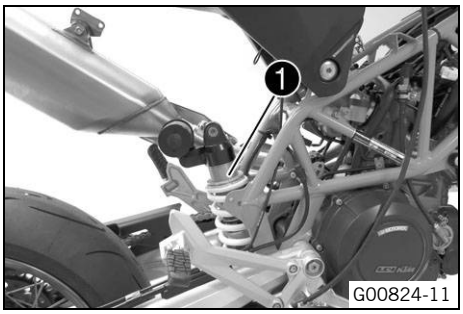


**Main work**

- Fold the rear upward and maneuver in shock absorber ❶ from above.
- Fold the rear down and position the shock absorber.

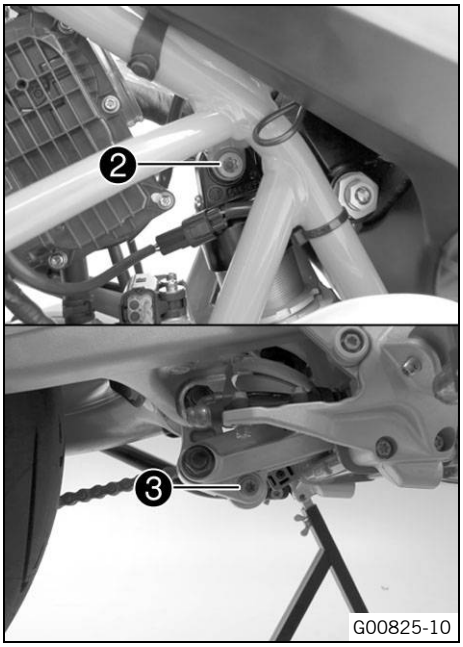


– Mount screw ❷ but do not tighten yet.
– Mount and tighten screw ❸.

Guideline

| | | | |
|---|---|---|---|
| Screw, bottom shock absorber | M10 | 45 Nm (33.2 lbf ft) | **Loctite® 243™** |

– Tighten screw ❷.

Guideline

| | | | |
|---|---|---|---|
| Screw, top shock absorber | M10 | 45 Nm (33.2 lbf ft) | **Loctite® 243™** |

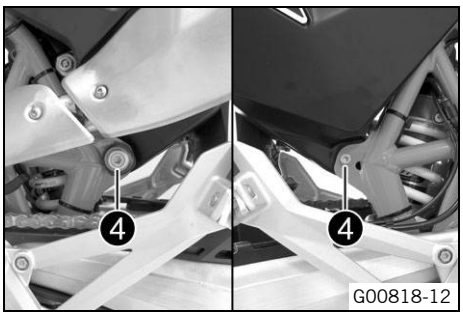


– Mount and tighten screws ❹.

Guideline

| | | | |
|---|---|---|---|
| Screw, fuel tank, bottom | M8 | 25 Nm (18.4 lbf ft) | **Loctite® 243™** |

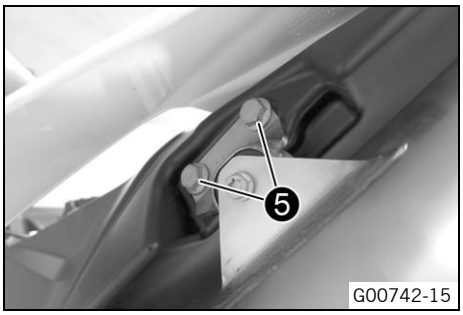


– Lift the rear fairing.
– Mount and tighten screws ❺.

Guideline

| | | |
|---|---|---|
| Screw, main silencer holder on fuel tank | M8 | 25 Nm (18.4 lbf ft) |

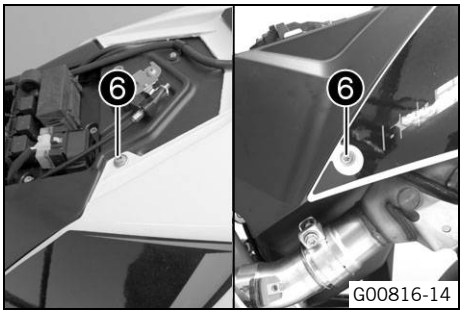


– Mount and tighten screws ❻.

Guideline

| | | |
|---|---|---|
| Screw, side cover | M6 | 5 Nm (3.7 lbf ft) |

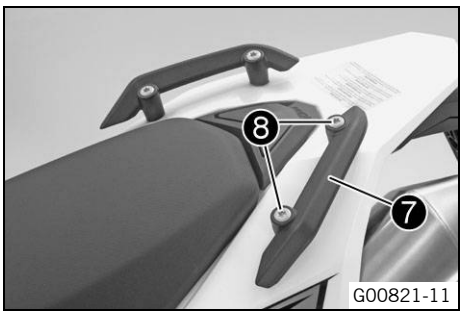


– Position grab handle ❼.
– Mount and tighten screws ❽.

Guideline

| | | |
|---|---|---|
| Screw, handrail | M8 | 20 Nm (14.8 lbf ft) |

**Finishing work**

– Mount the side cover. (☛ p. 62)

– Mount the seat. (☛ p. 62)
– Remove the motorcycle from the work stand. (☛ p. 12)

## 8.11 Servicing the shock absorber

**Caution**
**Danger of accidents** Disassembly of pressurized parts can lead to injury.
– The shock absorber is filled with high density nitrogen. Adhere to the description provided.

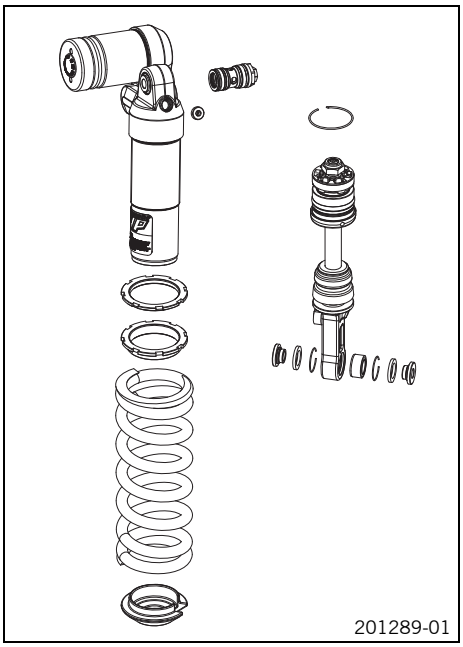
201289-01

**Condition**
The shock absorber has been removed.
– Remove the spring. (☛ p. 39)
– Dismantle the damper. (☛ p. 40)
– Disassemble the piston rod. (☛ p. 41)
– Check the damper. (☛ p. 42)
– Remove the heim joint. (☛ p. 43)
– Install the heim joint. (☛ p. 44)
– Assemble the piston rod. (☛ p. 45)
– Assemble the damper. (☛ p. 46)
– Install the spring. (☛ p. 51)

## 8.12 Removing the spring

**Condition**
The shock absorber has been removed.

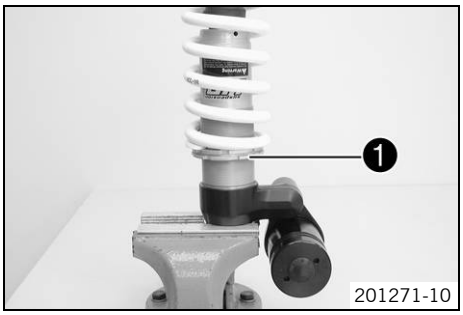

201271-10

– Clamp the shock absorber in the vise using soft jaws for protection.
– Measure and note spring length in preloaded state.
– Loosen retaining ring ❶ and the adjusting ring with the special tool.

| Hook wrench (T106S) (☛ p. 238) |
|---|

– Turn the retaining ring and adjusting ring until the spring is fully relieved of tension.

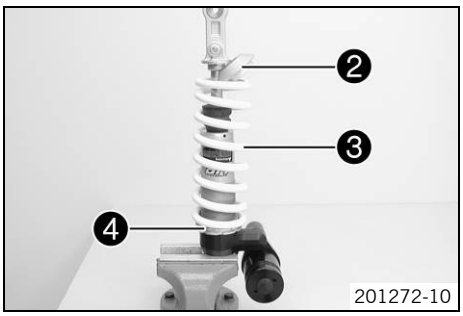

201272-10

– Remove spring retainer ❷.
– Take off spring ❸ with the retaining ring and adjusting ring ❹.

## 8.13 Dismantling the damper

**Preparatory work**

– Remove the spring. (☛ p. 39)

**Main work**

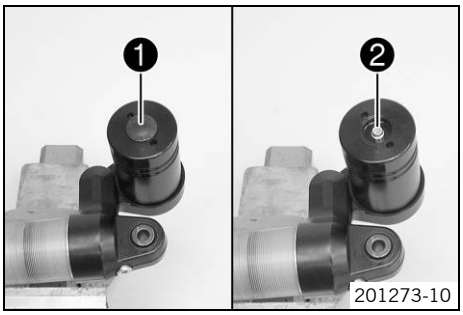


– Establish and note the current state of the rebound damping and compression damping.
– Completely open the adjusters of the rebound and compression damping.
– Remove rubber cap ❶ of the reservoir.
– Open screw ❷ slowly.
  ✔ The pressurized nitrogen escapes.

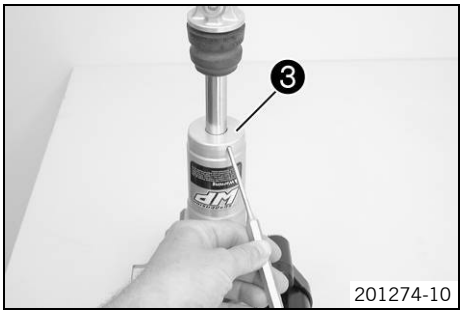


– Clamp the damper in the vise using soft jaws.
– Remove locking cap ❸.

– Press in seal ring retainer ❹. Remove lock ring ❺.

> **Info**
> Do not scratch the inner surface.

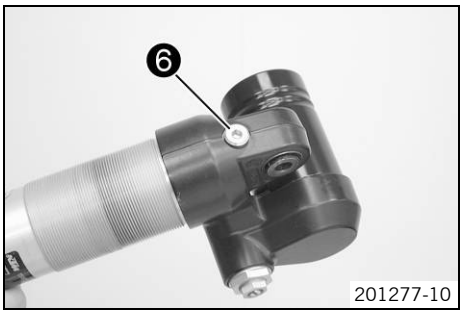


– Remove screw ❻. Drain the oil.

– Remove the piston rod. Drain the remaining oil.

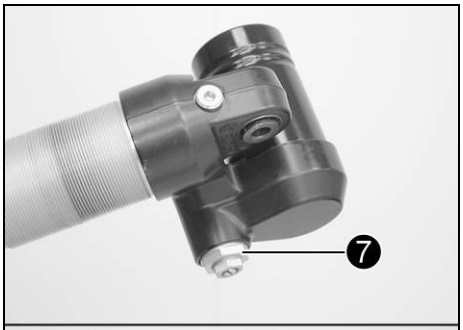

– Remove compression adjuster ❼. Remove the spring, sleeve, and piston.

## 8.14 Disassembling the piston rod

**Preparatory work**

– Remove the spring. (☛ p. 39)
– Dismantle the damper. (☛ p. 40)

**Main work**

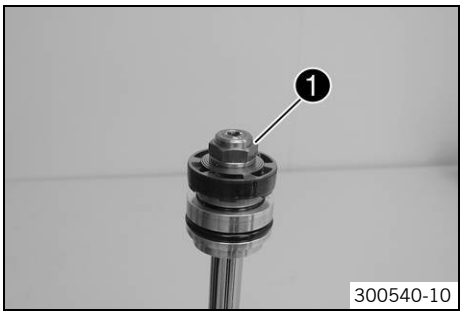


– Clamp the piston rod with the heim joint in a vise.
– Remove nut ❶.

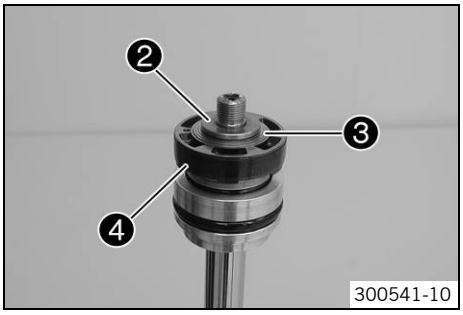


– Remove supporting plate ❷ and rebound shim stack ❸ together with piston ❹.

**Info**
Thread the rebound shim set on a screwdriver and set the parts down together.

– Remove compression shim stack ❻ with supporting plate ❺.

**Info**
Thread the compression shim stack on a screwdriver and set the parts down together.

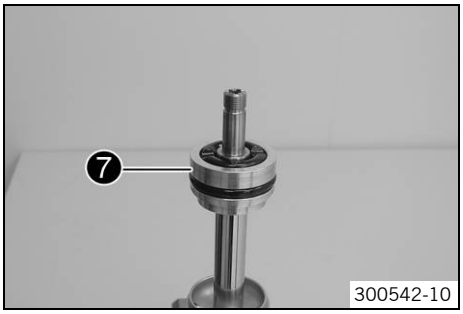


– Remove seal ring retainer ❼.

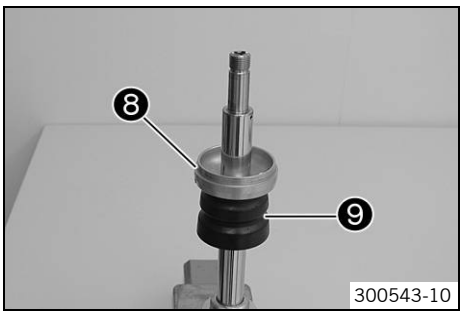


– Remove locking cap ❽ and rubber buffer ❾.

## 8.15 Checking the damper

**Condition**
The damper has been disassembled.

– Measure the inside diameter at both ends and in the center of the damper cartridge.

| Damper cartridge | |
|---|---|
| Minimum diameter | 46.10 mm (1.815 in) |

» If the measured value is greater than the specified value:
  – Change the damper cartridge.

– Check the damper cartridge for damage and wear.
  » If there is damage or wear:
    – Change the damper cartridge.

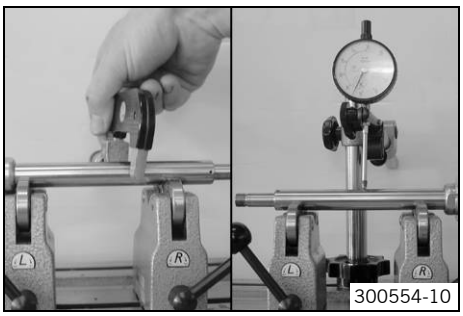


– Measure the diameter of the piston rod.

| Piston rod | |
|---|---|
| Diameter | ≥ 17.95 mm (≥ 0.7067 in) |

» If the specification is not reached:
  – Change the piston rod.

– Measure the run-out of the piston rod.

| Piston rod | |
|---|---|
| Run-out | ≤ 0.03 mm (≤ 0.0012 in) |

» If the measured value is greater than the specified value:
  – Change the piston rod.

– Check the piston rod for damage and wear.
  » If there is damage or wear:
    – Change the piston rod.

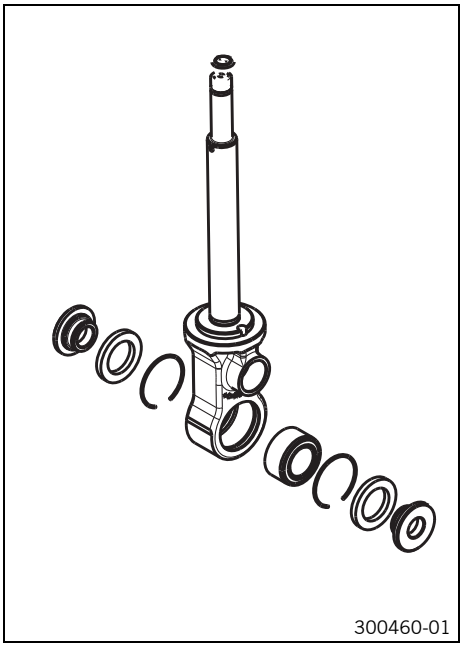
300460-01

– Check the heim joint for damage and wear.
  » If there is damage or wear:
    – Change the heim joint.

## 8.16 Removing the heim joint

**Condition**
The shock absorber has been removed.

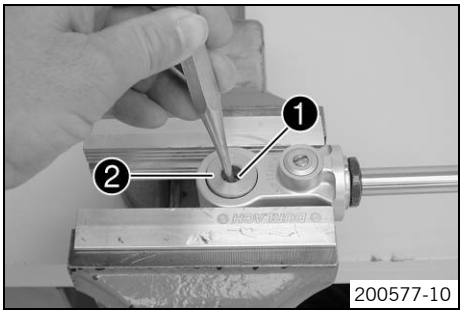

200577-10

– Clamp the shock absorber in the vise using soft jaws for protection.
– Remove collar bushing ❶ of the heim joint.

| |
|---|
| Pin (T120) (☛ p. 238) |

– Turn over the shock absorber and remove collar bushing ❷ of the heim joint.

| |
|---|
| Pin (T120) (☛ p. 238) |

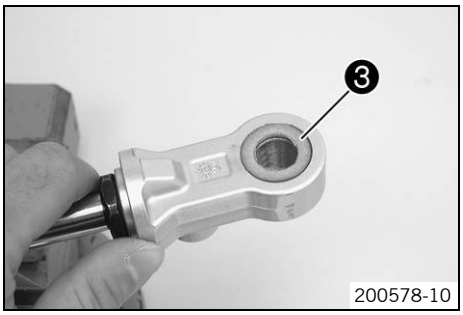

200578-10

– Remove seal rings ❸ on both sides.

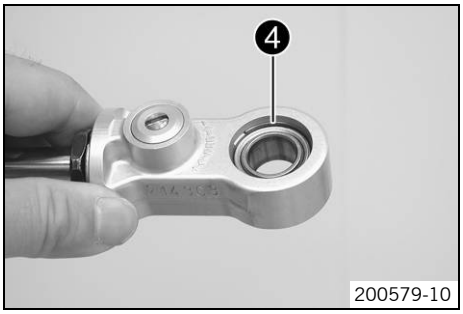

200579-10

– Remove lock rings ❹ on both sides.

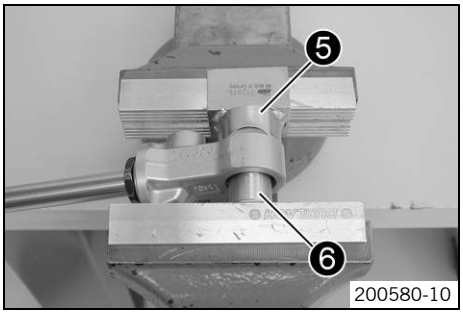


– Place special tool ❺ underneath and press out the heim joint with special tool ❻.

| |
|---|
| Pressing tool (T1207S) (☛ p. 238) |

## 8.17 Installing the heim joint

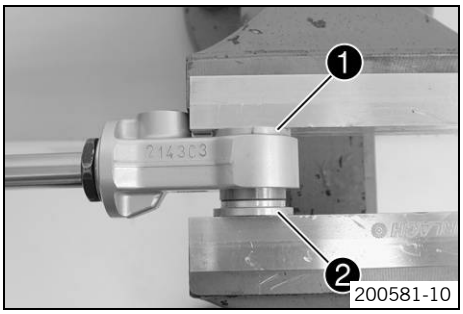


– Place special tool ❶ underneath and press in the heim joint as far as the center using special tool ❷.

| |
|---|
| Pressing tool (T1206) (☛ p. 238) |
| Pressing tool (T129) (☛ p. 239) |

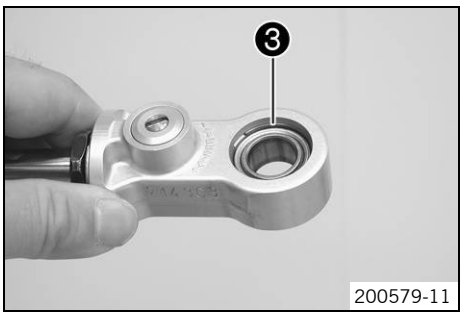


– Mount lock rings ❸ on both sides.

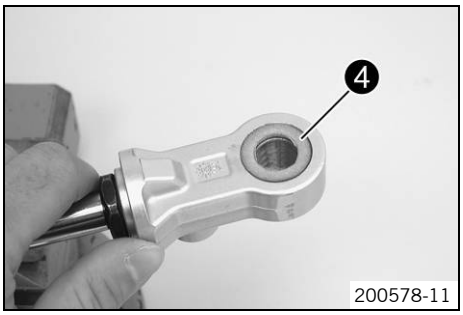


– Mount seal rings ❹ on both sides and grease them.

| |
|---|
| Lubricant (T158) (☛ p. 226) |

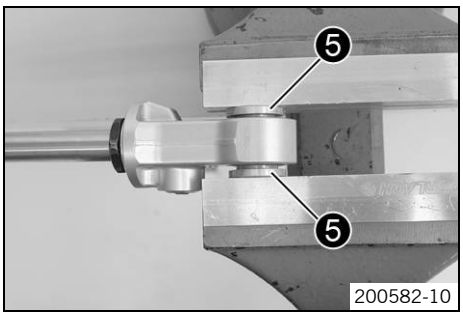


– Press in both collar sleeves ❺ of the heim joint.

## 8.18 Assembling the piston rod

**Preparatory work**

– Check the damper. (☛ p. 42)

**Main work**

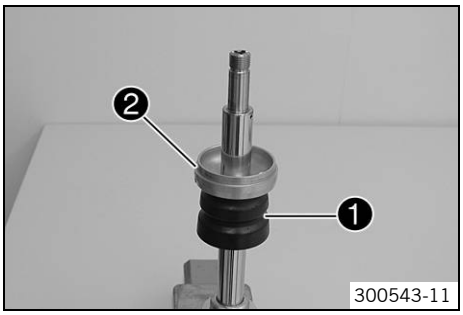


– Clamp the piston rod with the heim joint in a vise.

Guideline

| |
|---|
| Use soft jaws. |

– Mount rubber buffer ❶ and locking cap ❷.

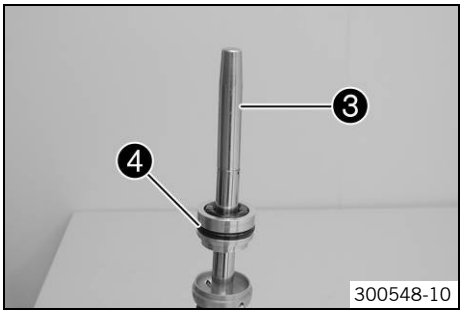


– Position special tool ❸ on the piston rod.

| |
|---|
| Mounting sleeve (T1515) (☛ p. 240) |

– Grease the seal ring and push seal ring retainer ❹ on to the piston rod.

| |
|---|
| Lubricant (T625) (☛ p. 226) |

– Remove the special tool.

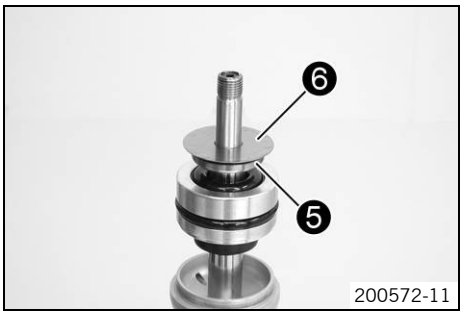


– Mount supporting plate ❺ with the rounded side facing downward.
– Mount the compression shim stack ❻ with the smaller shims facing downward.

– Sand both sides of the piston on a surface plate using 1200-grit sandpaper.
– Clean the piston.
– Assemble the piston.

Guideline

| | |
|---|---|
| View Ⓐ | Piston from above |
| View Ⓑ | Piston from below |

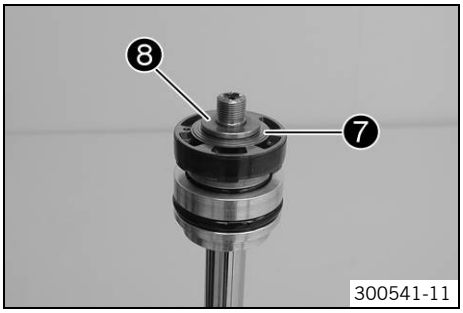


– Mount the rebound shim stack ❼ with the smaller shims facing upward.
– Install supporting plate ❽.

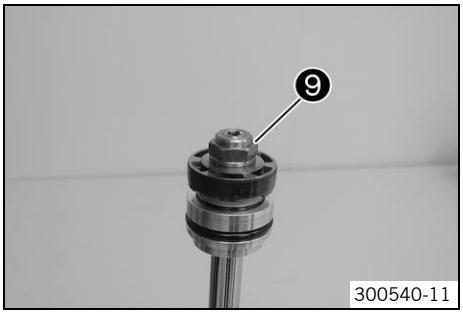


– Mount and tighten nut ❾.

Guideline

| | | |
|---|---|---|
| Piston rod nut | M12x1 | 40 Nm<br>(29.5 lbf ft) |

## 8.19 Assembling the damper

**Preparatory work**

– Check the damper. (☛ p. 42)
– Assemble the piston rod. (☛ p. 45)

**Main work**

– Push the spring and sleeve onto the compression adjuster. Mount the piston.
– Mount and tighten compression adjuster ❶.

Guideline

| | | |
|---|---|---|
| Compression adjuster | M26x1 | 30 Nm<br>(22.1 lbf ft) |

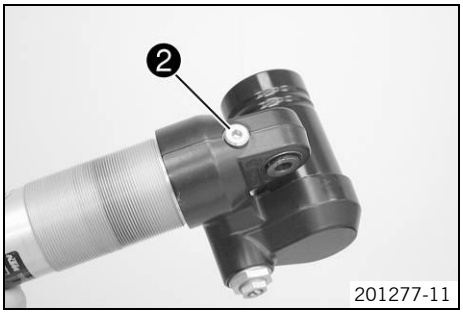


– Mount and tighten screw ❷.

Guideline

| | | |
|---|---|---|
| Filling port screw | M10x1 | 14 Nm<br>(10.3 lbf ft) |

– Clamp the damper in the vise using soft jaws.
– Fill the damper cartridge about half full.

| |
|---|
| Shock absorber fluid (SAE 2.5) (50180751S1) (☛ p. 225) |

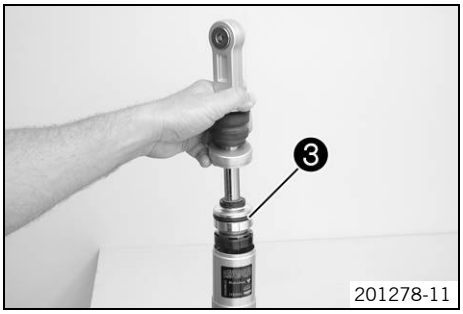


– Grease O-ring ❸ of the seal ring retainer.

| |
|---|
| Lubricant (T158) (☛ p. 226) |

– Mount the piston rod carefully.

– Install the seal ring bearer ❹ and push it under the ring groove.
– Mount lock ring ❺.

**Info**
Do not scratch the inner surface.

– Pull out the piston rod so that the seal ring retainer rests against the lock ring.

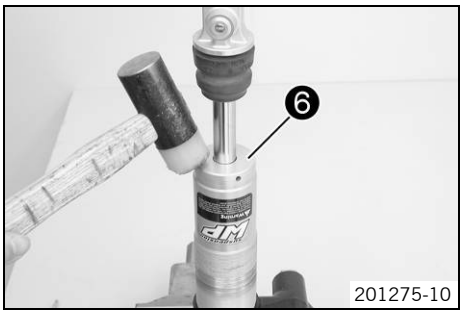


– Mount locking cap ❻ of the damper cartridge.
– Bleed and fill the damper. (☛ p. 48)
– Fill the damper with nitrogen. (☛ p. 50)

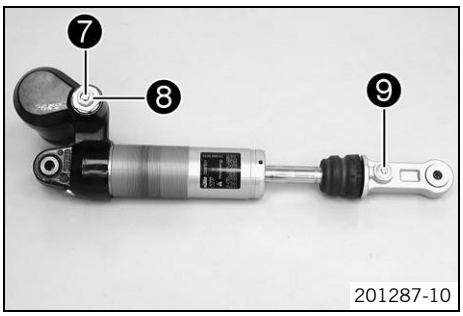


**Alternative 1**

– Turn adjusting screw ❼ clockwise with a screwdriver up to the last perceptible click.
– Turn back counterclockwise by the number of clicks corresponding to the shock absorber type.

Guideline

| Compression damping, low-speed | |
|---|---|
| Comfort | 25 clicks |
| Standard | 20 clicks |
| Sport | 15 clicks |
| Full load capacity | 15 clicks |

– Turn adjusting screw ❽ all the way clockwise using a socket wrench.
– Turn back counterclockwise the number of turns corresponding to the shock absorber type.

Guideline

| Compression damping, high-speed | |
|---|---|
| Comfort | 2 turns |
| Standard | 1.5 turns |
| Sport | 1 turn |
| Full payload | 1 turn |

– Turn adjusting screw ❾ clockwise up to the last perceptible click.
– Turn back counterclockwise by the number of clicks corresponding to the shock absorber type.

Guideline

| Rebound damping | |
|---|---|
| Comfort | 20 clicks |
| Standard | 15 clicks |
| Sport | 10 clicks |
| Full payload | 10 clicks |

**Alternative 2**

**Warning**

**Danger of accidents** Modifications to the suspension settings can seriously alter the vehicle's ride behavior.

- Extreme modifications to the adjustment of the suspension components can cause a serious deterioration in the handling characteristics and overload some components.
- Only make adjustments within the recommended range.
- After making adjustments, ride slowly at first to get the feel of the new ride behavior.

- Turn adjusting screws ❼, ❽ and ❾ to the position determined during disassembly.

**Finishing work**

- Install the spring. (☛ p. 51)

## 8.20 Bleeding and filling the damper

**Info**

Before working with the vacuum pump, be sure to read the operating instructions carefully.
Completely open the adjusters of the rebound and compression damping.

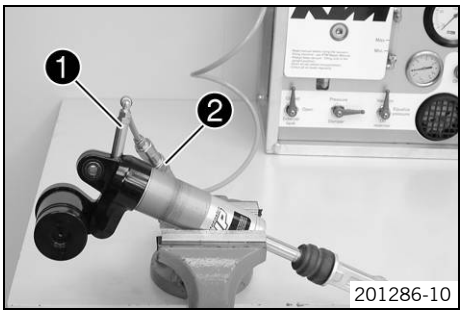


- Remove the screw of the filling port.
- Install adapter ❶ on the damper.

**Info**

Tighten only hand-tight, without the use of tools.

- Connect the adapter ❶ to connector ❷ of the vacuum pump.

| Vacuum pump (T1240S) (☛ p. 239) |
|---|

- Clamp the damper with soft jaws or hold it as shown in the photo.

**Info**

Clamp the damper only lightly.
The filling port must be at the highest point.
The piston rod slides in and out during filling - do not hold it tight with your hand!

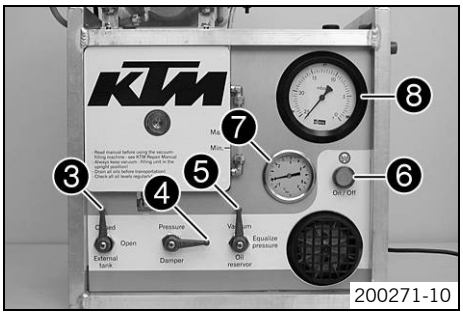


- Place the control lever as shown in the photo.
  - ✔ The **External tank** ❸ control lever is on **Closed**, **Damper** ❹ on **Vacuum**, and **Oil reservoir** ❺ on **Vacuum**.
- Operate the **On/Off** switch ❻.
  - ✔ The vacuum pump process starts.
  - ✔ Pressure gauge ❼ falls to the specified value.

| < 0 bar |
|---|

  - ✔ The vacuum gauge ❽ falls to the specified value.

| 4 mbar |
|---|

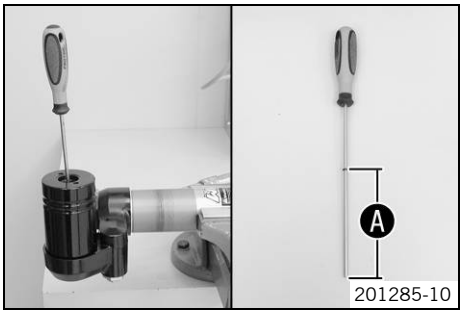


– Measure distance Ⓐ between the floating piston and reservoir hole with the special tool.

| |
|---|
| Depth micrometer (T107S) (☛ p. 238) |

✔ The floating piston is positioned all the way at the bottom.

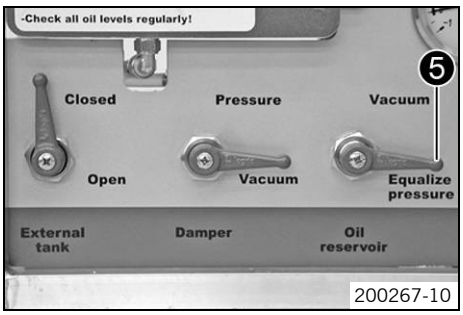


– When the vacuum pressure gauge reaches the specified value, turn the **Oil reservoir** control lever ❺ to **Equalize pressure**.

Guideline

| |
|---|
| 4 mbar |

✔ The pressure gauge rises to the specified value.

| |
|---|
| 0 bar |

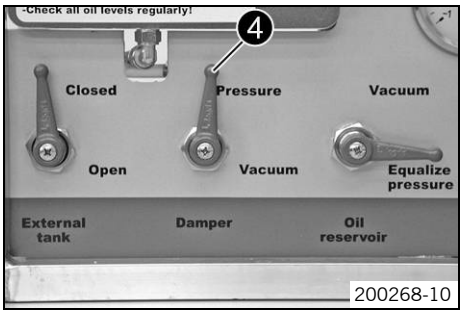


– When the pressure gauge reaches the specified value, turn the **Damper** control lever ❹ to **Pressure**.

Guideline

| |
|---|
| 0 bar |

✔ Oil is pumped into the damper.

✔ The pressure gauge rises to the specified value.

| |
|---|
| 3 bar |

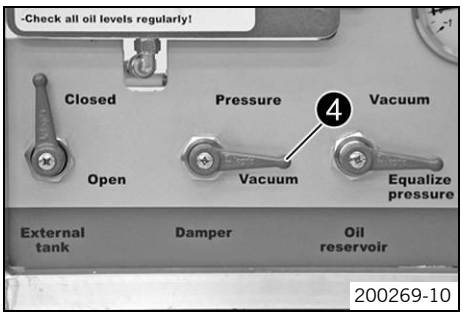


– When the pressure gauge reaches the specified value, turn the **Damper** ❹ control lever to **Vacuum**.

Guideline

| |
|---|
| 3 bar |

✔ The pressure gauge falls to the specified value.

| |
|---|
| 0 bar |

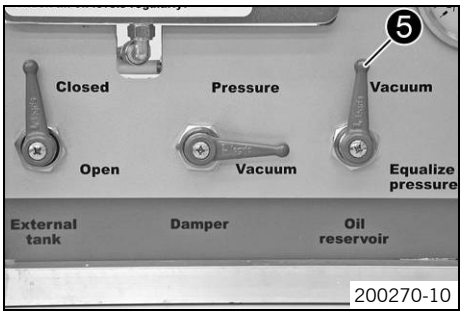


– When the pressure gauge reaches the specified value, turn the **Oil reservoir** ❺ control lever to **Vacuum**.

Guideline

| |
|---|
| 0 bar |

✔ The vacuum gauge falls to the specified value.

| |
|---|
| 4 mbar |

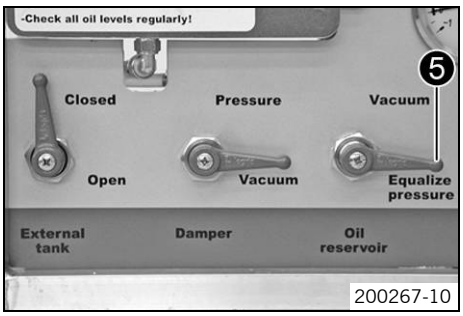


– When the vacuum pressure gauge reaches the specified value, turn the **Oil reservoir** control lever ❺ to **Equalize Pressure**.

Guideline

| |
|---|
| 4 mbar |

✔ The pressure gauge falls to the specified value.

| |
|---|
| 0 bar |

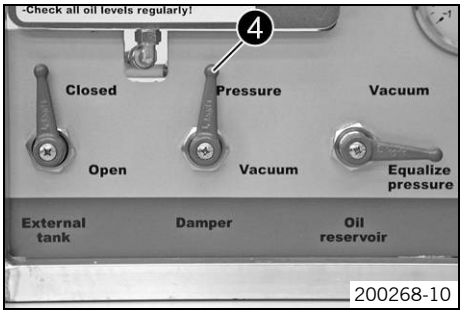


– When the pressure gauge reaches the specified value, turn the **Damper** control lever ❹ to **Pressure**.

Guideline

| |
|---|
| 0 bar |

✔ Oil is pumped into the damper.

✔ The pressure gauge rises to the specified value.

| |
|---|
| 3 bar |

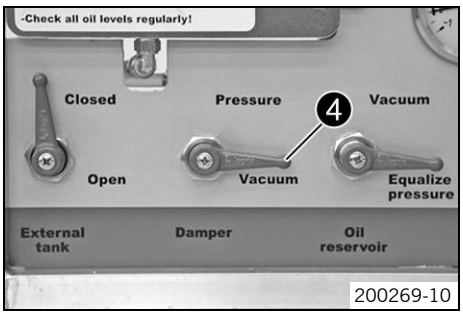


– When the pressure gauge reaches the specified value, turn the **Damper** ❹ control lever to **Vacuum**.

Guideline

| |
|---|
| 3 bar |

✔ The pressure gauge falls to the specified value.

| |
|---|
| 0 bar |

– When the pressure gauge reaches the specified value, operate the **On/Off** switch.

Guideline

| |
|---|
| 0 bar |

✔ The vacuum pump is switched off.

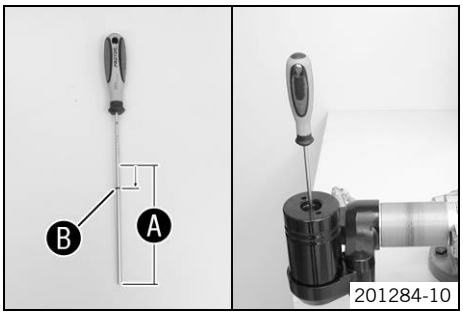


– Slide O-ring Ⓑ to the end of the special tool by the specified value (distance Ⓐ minus specified value).

Guideline

| |
|---|
| 10 mm |

| |
|---|
| Depth micrometer (T107S) (☛ p. 238) |

– Slide the floating piston into the reservoir to the shortened position using the special tool.

**Info**
The floating piston must be positioned at exactly this point when the rod is fully extended; otherwise, damage will occur during compression of the shock absorber.

– Remove the special tool.

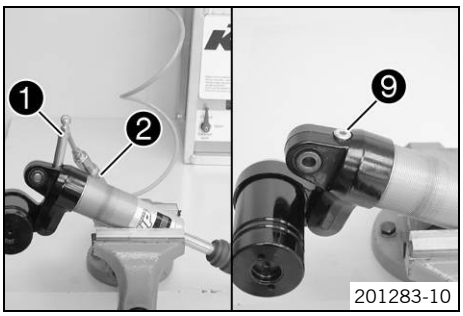


– Remove adapter ❶ from connection ❷ of the vacuum pump.

**Info**
Hold the damper so that the filling port is at the highest point.

– Remove the adapter.

– Mount and tighten screw ❾.

Guideline

| | | |
|---|---|---|
| Filling port screw | M10x1 | 14 Nm<br>(10.3 lbf ft) |

## 8.21 Filling the damper with nitrogen

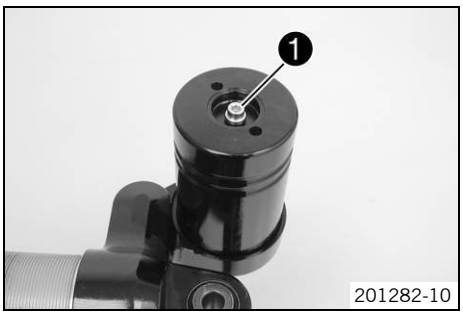


– Screw in screw ❶ by approx. 2 rotations but do not tighten.

**Info**
The piston rod is fully extended.

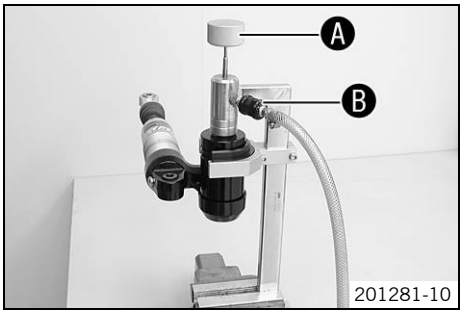


– Clamp special tool in the vise.

| |
|---|
| Nitrogen filling tool (T170S1) (☛ p. 240) |

– Connect the special tool to the pressure regulator of the filling cylinder.

| |
|---|
| Filling gas - nitrogen |

– Adjust pressure regulator.

Guideline

| | |
|---|---|
| Gas pressure | 10 bar (145 psi) |

– Position the damper in the special tool.

✔ The hexagonal part of the tap handle Ⓐ engages in the hexagon socket of the filling port screw.

– Open filler tap Ⓑ.

– Fill the damper for at least 15 seconds.

Guideline

| | |
|---|---|
| Gas pressure | 10 bar (145 psi) |

**Info**
Watch the pressure regulator dial.
Make sure that the damper is filled to the specified pressure.

– Close the filling port screw using tap handle Ⓐ.

– Close spigot Ⓑ and take the damper out of the special tool.

– Tighten the filling port screw.

Guideline

| | | |
|---|---|---|
| Screw, reservoir filling port | M5 | 3 Nm (2.2 lbf ft) |

– Mount the rubber cap of the reservoir.

## 8.22 Installing the spring

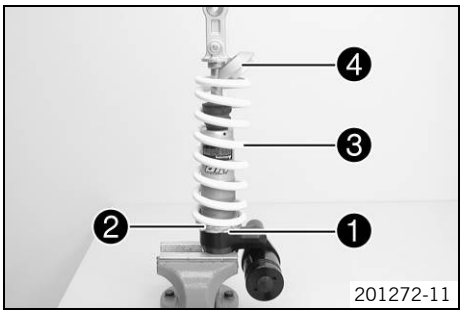


– Clamp the damper in the vise using soft jaws.

– Install retaining ring ❶ and turn it down as far as possible.

✔ The collar points to the adjusting ring.

– Mount adjusting ring ❷ and turn it down as far as possible.

✔ The collar points to the spring.

– Measure the overall spring length without a load.

– Mount spring ❸.

Guideline

| | |
|---|---|
| Spring rate | |
| Medium (standard) | 80 N/mm (457 lb/in) |
| Hard | 85 N/mm (485 lb/in) |

– Mount spring retainer ❹.

✔ The open end is opposite the spring end.

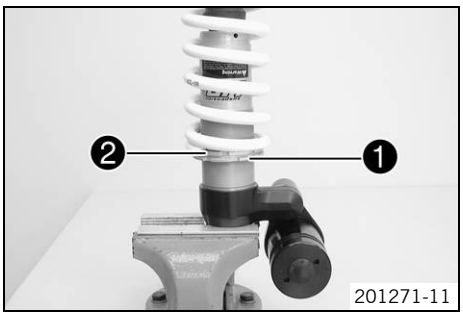


**Alternative 1**

– Tension the spring to the prescribed amount by turning the adjusting ring.

Guideline

| | |
|---|---|
| Spring preload | 20 mm (0.79 in) |

| |
|---|
| Hook wrench (T106S) (☛ p. 238) |

**Alternative 2**

**Warning**

**Danger of accidents** Modifications to the suspension settings can seriously alter the vehicle's ride behavior.

- Extreme modifications to the adjustment of the suspension components can cause a serious deterioration in the handling characteristics and overload some components.
- Only make adjustments within the recommended range.
- After making adjustments, ride slowly at first to get the feel of the new ride behavior.

- Tension the spring to the amount measured during dismantling by turning adjusting ring ❷.

| |
|---|
| Hook wrench (T106S) (☛ p. 238) |

- Tighten lock nut ❶ and the adjusting ring.

## 9.1 Removing the manifold

**Warning**
**Danger of burns** The exhaust system gets very hot when the vehicle is driven.

– Allow the exhaust system to cool down. Do not touch hot components.

**Preparatory work**
– Remove the seat. (☛ p. 61)
– Take off the side cover. (☛ p. 62)

**Main work**

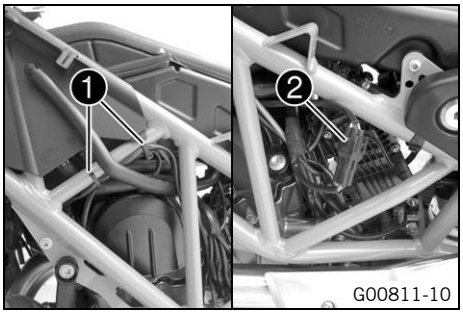


– Remove cable binders ❶.
– Push the cable to the right. Disconnect plug-in connector ❷ of the lambda sensor.
– Feed out the cable of the lambda sensor.

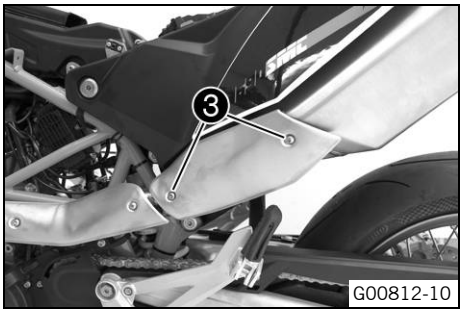


– Remove screws ❸.
– Remove the exhaust heat shield.

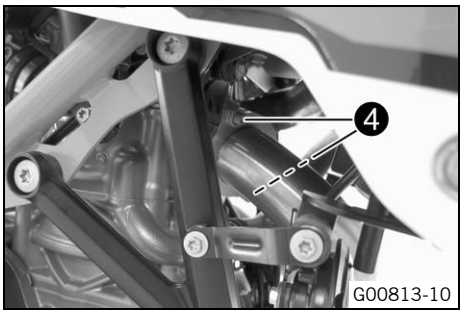


– Remove nuts ❹ of the manifold.

**Info**
Do not misplace the spacer.

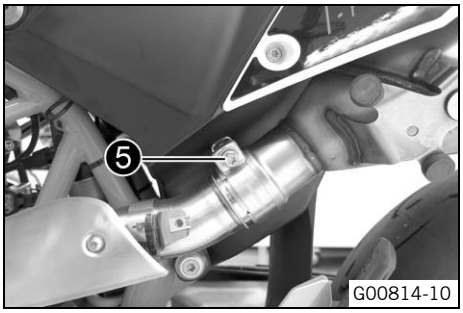


– Loosen screw ❺.

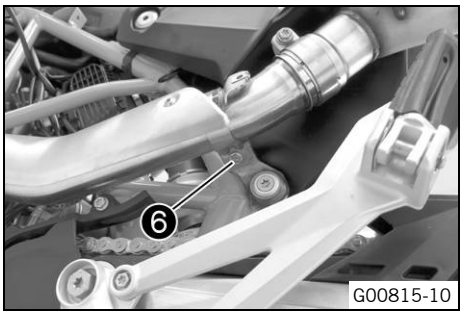


– Remove screw ❻.
– Take off the manifold.

## 9.2 Installing the manifold

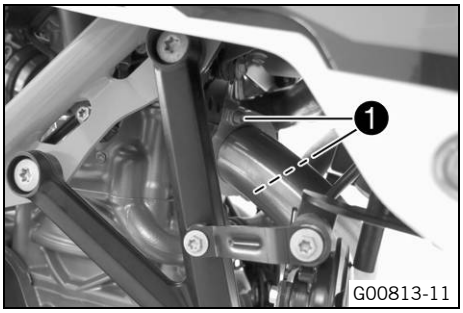


**Main work**

- Position the manifold with the seals.
- Position the spacer.
- Mount and tighten nuts ❶ with the gasket.

  Guideline

| | | | |
|---|---|---|---|
| Nut, manifold on cylinder head | M8 | 25 Nm (18.4 lbf ft) | Copper paste |

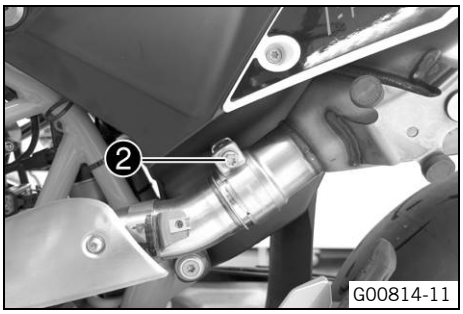


- Position the screw clamp.
- Tighten screw ❷.

  Guideline

| | | | |
|---|---|---|---|
| Screw, main silencer clamp | M8 | 12 Nm (8.9 lbf ft) | Copper paste |

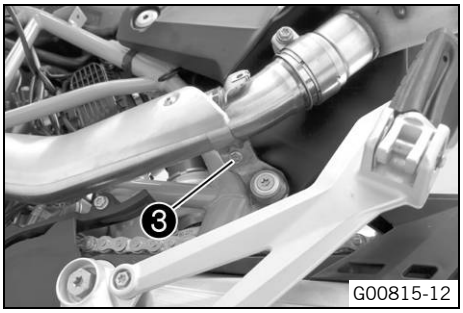


- Position the screw clamp.
- Mount and tighten screw ❸.

  Guideline

| | | | |
|---|---|---|---|
| Screw, exhaust clamp | M8 | 12 Nm (8.9 lbf ft) | Copper paste |

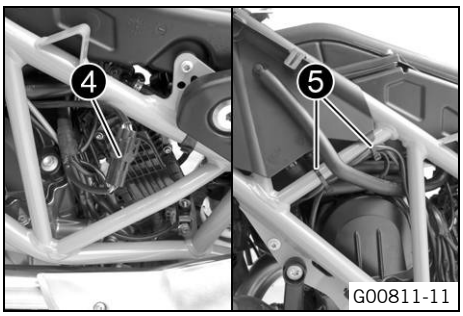


- Connect plug-in connector ❹ of the lambda sensor. Route the wiring harness without tension and secure it with cable binders ❺.

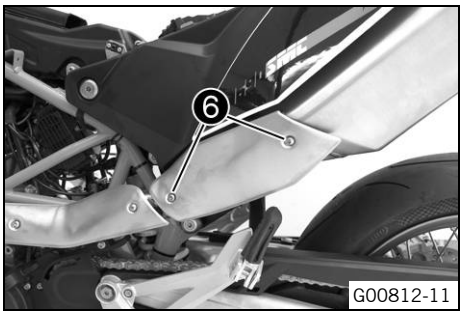


- Position the exhaust heat guard.
- Mount and tighten screws ❻.

  Guideline

| | | | |
|---|---|---|---|
| Screw, exhaust heat shield | M5 | 8 Nm (5.9 lbf ft) | **Loctite® 243™** |

**Finishing work**

- Mount the side cover. (☛ p. 62)
- Mount the seat. (☛ p. 62)

## 9.3 Removing the main silencer

**Warning**

**Danger of burns** The exhaust system gets very hot when the vehicle is driven.

– Allow the exhaust system to cool down. Do not touch hot components.

**Preparatory work**

– Raise the motorcycle with the work stand. (☛ p. 11)

– Remove the seat. (☛ p. 61)

**Main work**

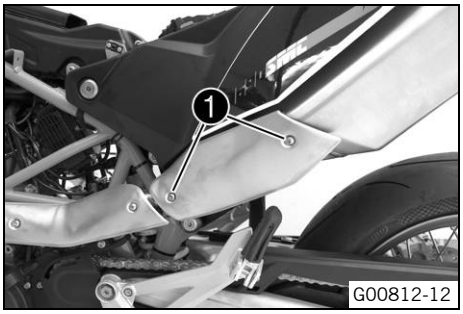


– Remove screws ❶.

– Remove the exhaust heat guard.

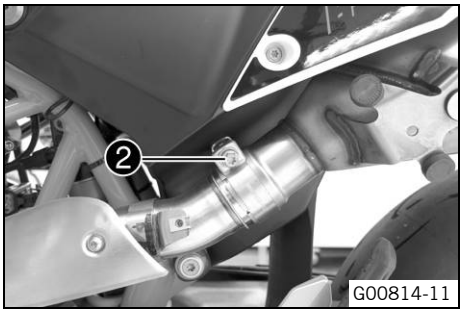


– Loosen screw ❷.

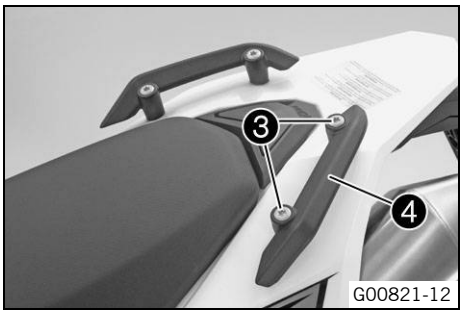


– Remove screws ❸.

– Remove grab handle ❹.

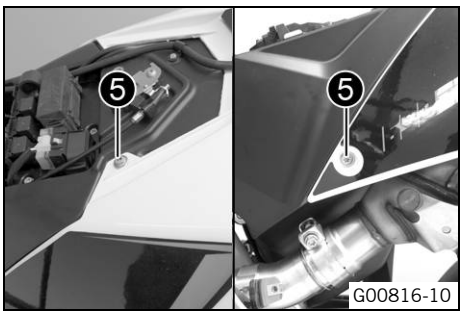


– Remove screws ❺.

– Lift the rear fairing.

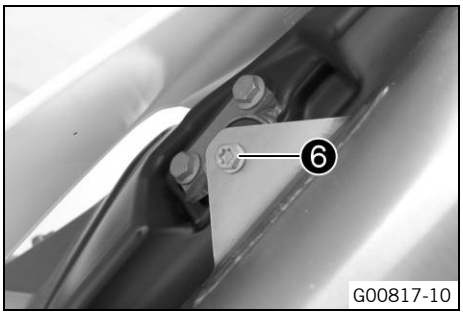


– Remove screws ❻.

– Remove the main silencer.

## 9.4 Installing the main silencer

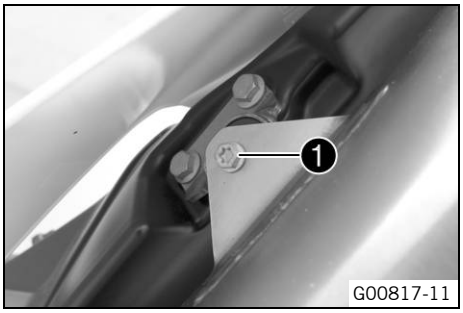


**Main work**

– Position the main silencer.
– Mount and tighten screw ❶.

Guideline

| | | |
|---|---|---|
| Screw, main silencer holder | M8 | 25 Nm (18.4 lbf ft) |

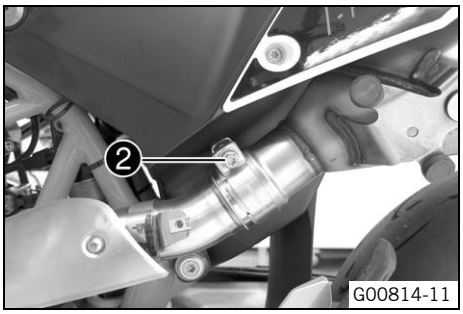


– Position the screw clamp.
– Tighten screw ❷.

Guideline

| | | | |
|---|---|---|---|
| Screw, main silencer clamp | M8 | 12 Nm (8.9 lbf ft) | Copper paste |

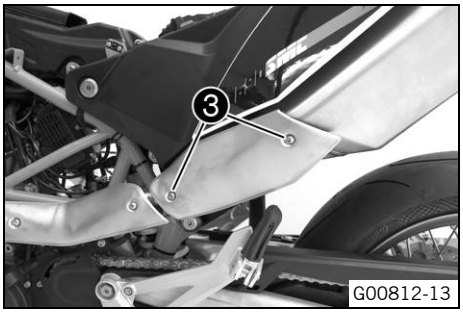


– Position the exhaust heat guard.
– Mount and tighten screws ❸.

Guideline

| | | | |
|---|---|---|---|
| Screw, exhaust heat shield | M5 | 8 Nm (5.9 lbf ft) | **Loctite® 243™** |

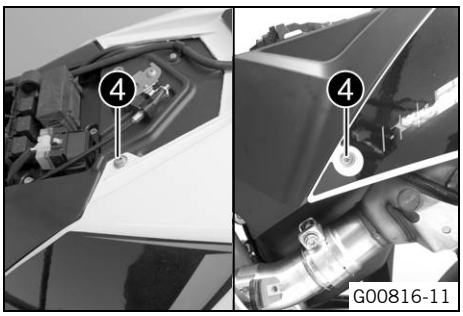


– Mount and tighten screws ❹.

Guideline

| | | |
|---|---|---|
| Rear fairing screw | M6 | 5 Nm (3.7 lbf ft) |

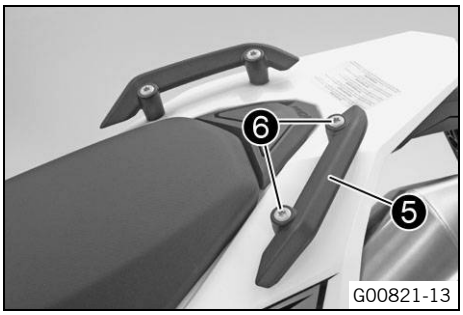


– Position grab handle ❺.
– Mount and tighten screws ❻.

Guideline

| | | |
|---|---|---|
| Screw, handrail | M8 | 20 Nm (14.8 lbf ft) |

**Finishing work**

– Mount the seat. (☛ p. 62)
– Remove the motorcycle from the work stand. (☛ p. 12)

## 10.1 Removing the air filter

**Preparatory work**

– Remove the seat. (☛ p. 61)

**Main work**

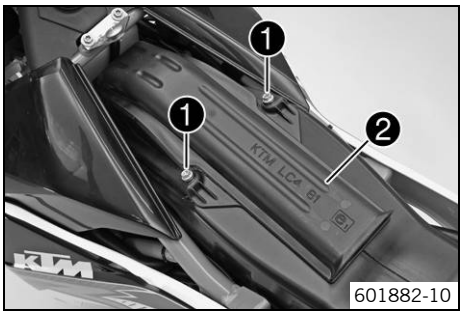


– Remove screws ❶. Take off air filter box top ❷.

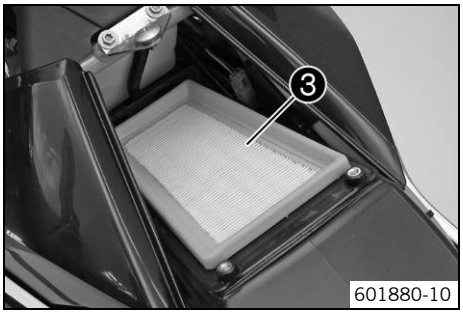


**Note**

**Engine failure** Unfiltered intake air has a negative effect on the service life of the engine.

– Never operate the vehicle without an air filter as dust and dirt will enter the engine and lead to increased wear.

– Remove air filter ❸.

## 10.2 Installing the air filter

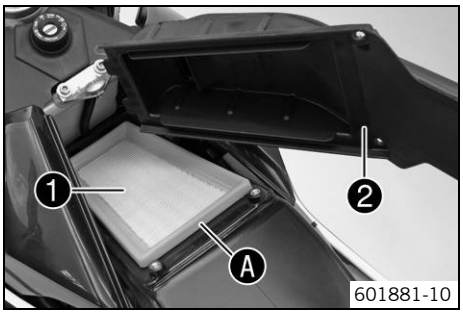


**Main work**

– Clean the air filter box.

– Mount air filter ❶.

**Info**

The air filter must lie flush against the air filter box along the entire sealing surface Ⓐ.
If the air filter is not correctly mounted, dust and dirt can enter the engine and cause damage.

– Hook air filter box top ❷ into the front of the air filter box and swing down.

– Mount and tighten screws ❸.

Guideline

| | | |
|---|---|---|
| Screw, air filter box top | M6 | 2 Nm (1.5 lbf ft) |

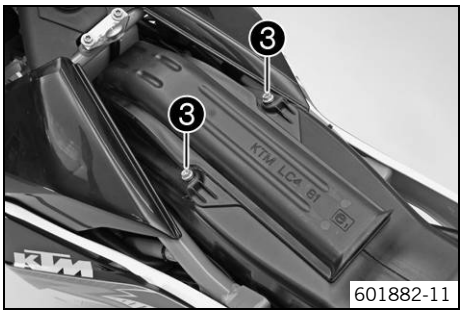


**Finishing work**

– Mount the seat. (☛ p. 62)

## 10.3 Removing the air filter box

**Preparatory work**

– Remove the seat. (☛ p. 61)

– Take off the side cover. (☛ p. 62)

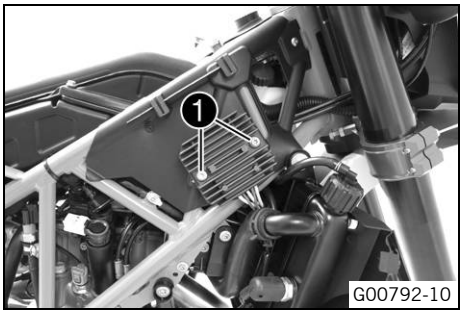


**Main work**

- Remove screws ❶.
- Take off the voltage regulator and hang it to the side in a de-energized state.

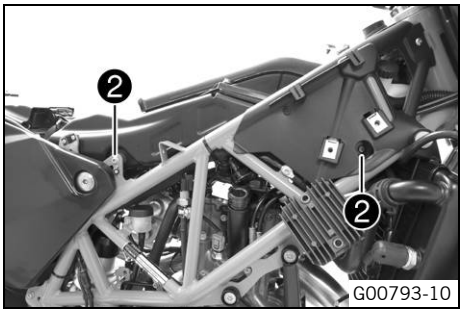


- Remove screws ❷.

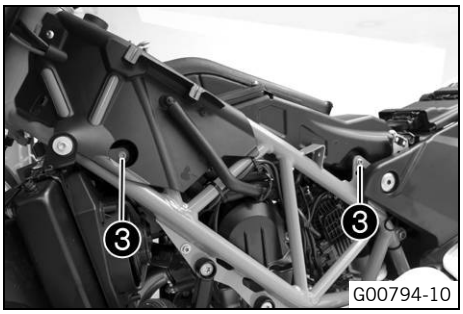


- Remove screws ❸.

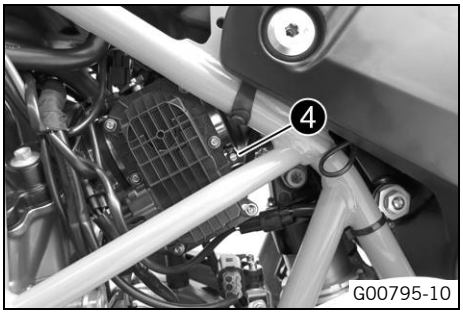


- Loosen hose clip ❹.

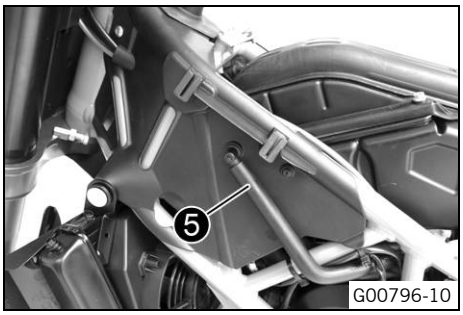


- Detach vent hose ❺.

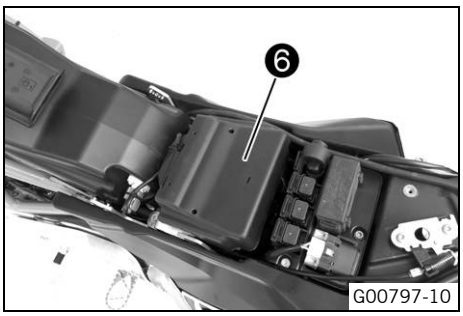


- Remove battery cover ❻.

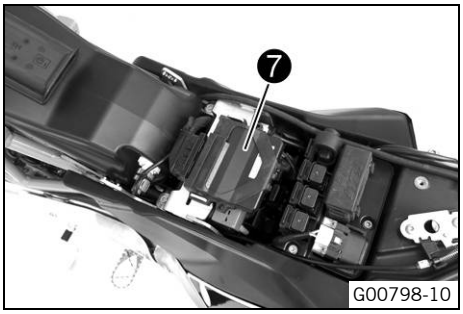


– Take off control unit ❼ and hang to the side.

– Remove the cable binder.
– Disconnect connector ❽ of the intake air temperature sensor.
– Raise the air filter box at the rear.
– Take off the air filter box.

## 10.4 Installing the air filter box

**Main work**
– Position the air filter box.
– Plug in connector ❶ of the intake air temperature sensor and secure with the cable binder.

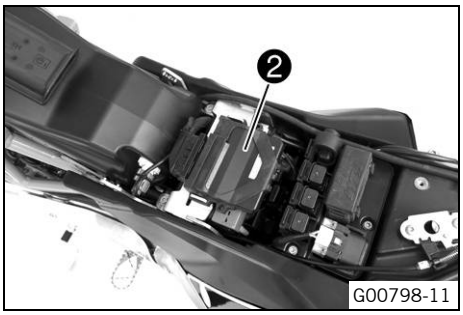


– Position control unit ❷.

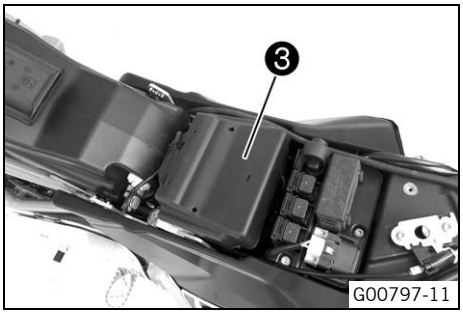


– Mount battery cover ❸.

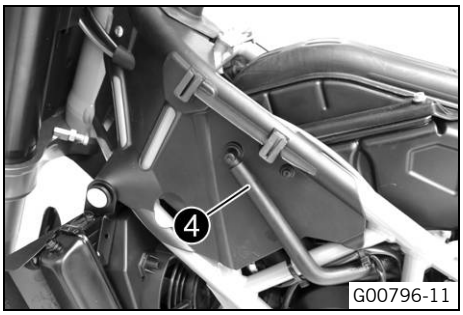


– Route vent hose ❹ without bends and mount.

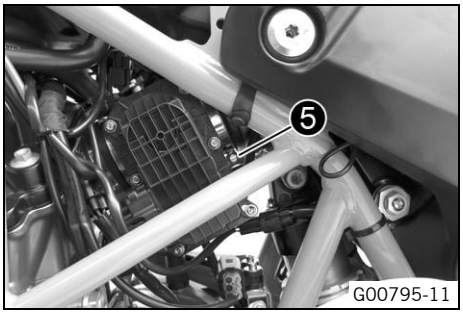


– Mount and tighten hose clip ❺.

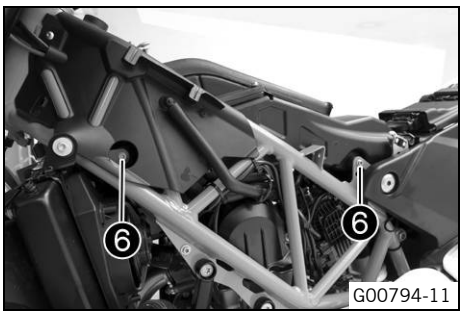


– Mount and tighten screws ❻.

Guideline

| | | |
|---|---|---|
| Remaining screws, chassis | M6 | 10 Nm (7.4 lbf ft) |

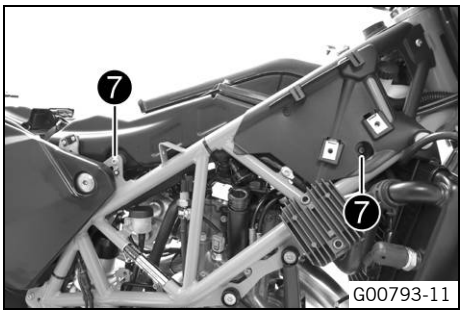


– Mount and tighten screws ❼.

Guideline

| | | |
|---|---|---|
| Remaining screws, chassis | M6 | 10 Nm (7.4 lbf ft) |

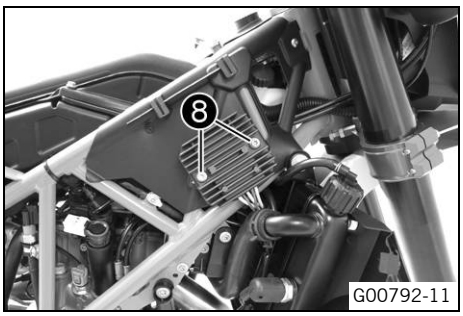


– Position the voltage regulator.
– Mount and tighten screws ❽.

Guideline

| | | |
|---|---|---|
| Remaining screws, chassis | M6 | 10 Nm (7.4 lbf ft) |

**Finishing work**

– Mount the side cover. (☛ p. 62)
– Mount the seat. (☛ p. 62)

# 11 FUEL TANK, SEAT, TRIM

## 11.1 Opening the filler cap

**Danger**

**Fire hazard** Fuel is highly flammable.

- Never refuel the vehicle near open flames or burning cigarettes, and always switch off the engine first. Be careful that no fuel is spilt, especially on hot vehicle components. Clean up spilt fuel immediately.
- The fuel in the fuel tank expands when warm and may emerge if overfilled. Follow the instructions on refueling.

**Warning**

**Danger of poisoning** Fuel is poisonous and a health hazard.

- Fuel must not come into contact with the skin, eyes, or clothing. Do not breathe in the fuel vapors. If contact occurs with the eyes, rinse with water immediately and contact a physician. Immediately clean contaminated areas on the skin with soap and water. If fuel is swallowed, contact a physician immediately. Change clothing that is contaminated with fuel. Store fuel properly in a suitable canister and keep away from children.

**Warning**

**Environmental hazard** Improper handling of fuel is a danger to the environment.

- Do not allow fuel to get into the ground water, the ground, or the sewage system.

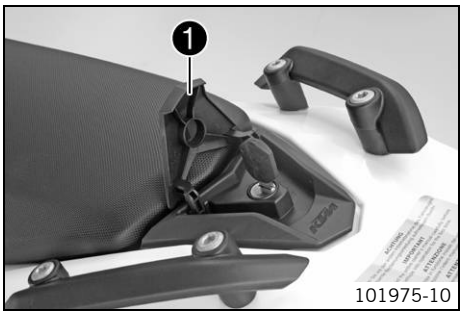

101975-10

- Lift the cover of filler cap 1 and insert the ignition key.
- Turn the ignition key 90° counterclockwise and remove the filler cap.

**Info**

The filler cap has a fuel tank breather.

## 11.2 Closing filler cap

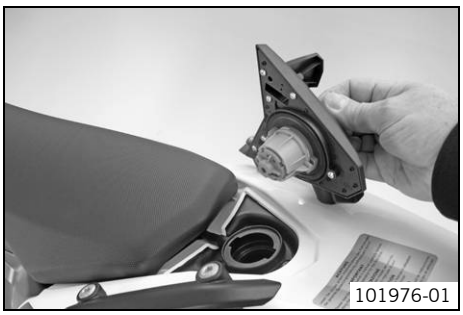
101976-01

- Put the filler cap back on and turn the ignition key 90° clockwise.
- Remove the ignition key and fold down the cover.

## 11.3 Removing the seat

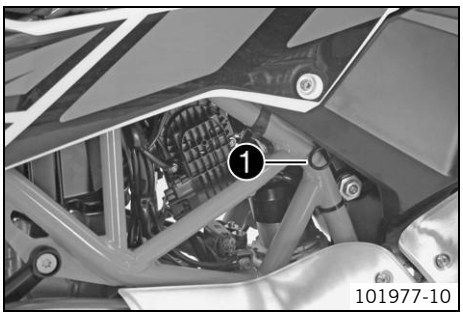

101977-10

- Pull on strap 1 and raise the rear of the seat at the same time.
- Pull back the seat and lift it off.

## 11.4 Mounting the seat

- Hook slot ❶ of the seat onto screw ❷, press the rear downward and at the same time push it forward.
- Push locking pin ❸ into lock housing ❹ and push the back of the seat down until the locking pin locks in place with an audible click.
- Finally, check that the seat is correctly mounted.

## 11.5 Taking off the side cover

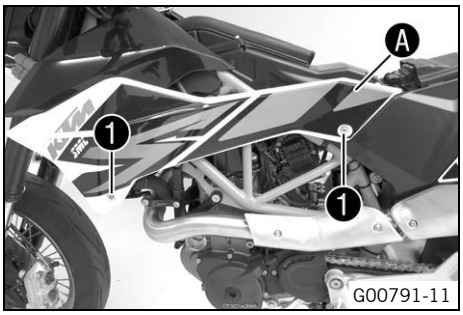


**Preparatory work**
- Remove the seat. (☛ p. 61)

**Main work**
- Remove screws ❶.
- Pull off the side cover in area Ⓐ and take off from above.
- Repeat the operation on the opposite side.

## 11.6 Mounting the side cover

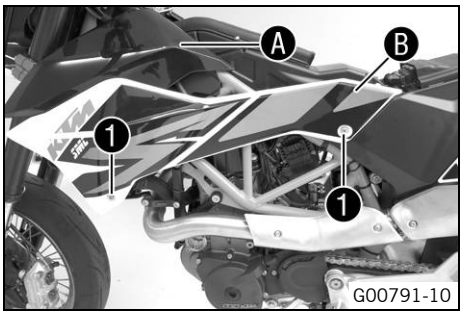


**Main work**
- Attach the side cover in area Ⓐ and engage it in area Ⓑ.
- Mount and tighten screws ❶.

  Guideline

| | | |
|---|---|---|
| Screw, side cover | M6 | 5 Nm (3.7 lbf ft) |

- Repeat the operation on the opposite side.

**Finishing work**
- Mount the seat. (☛ p. 62)

## 11.7 Checking the fuel pressure

**Danger**

**Fire hazard** Fuel is highly flammable.

- Never refuel the vehicle near open flames or burning cigarettes, and always switch off the engine first. Be careful that no fuel is spilt, especially on hot vehicle components. Clean up spilt fuel immediately.
- The fuel in the fuel tank expands when warm and may emerge if overfilled. Follow the instructions on refueling.

**Warning**

**Danger of poisoning** Fuel is poisonous and a health hazard.

- Fuel must not come into contact with the skin, eyes, or clothing. Do not breathe in the fuel vapors. If contact occurs with the eyes, rinse with water immediately and contact a physician. Immediately clean contaminated areas on the skin with soap and water. If fuel is swallowed, contact a physician immediately. Change clothing that is contaminated with fuel. Store fuel properly in a suitable canister and keep away from children.

**Condition**
The fuel tank is completely full.
Ensure that the battery voltage does not drop below 12.5 V.
The ignition is on.
The diagnostics tool is connected.

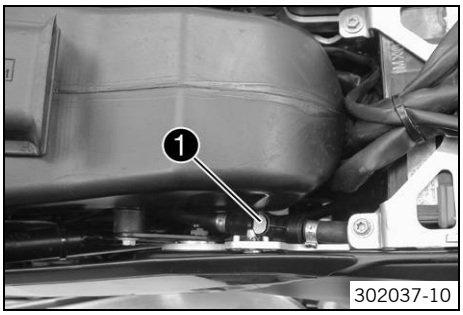


– Press on the metal plate and disconnect the fuel hose connection ❶.

> **Info**
> Remaining fuel may run out of the fuel hose.

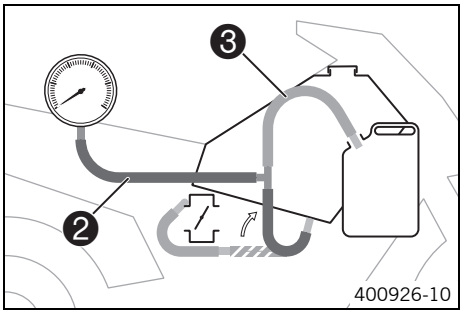


– Mount special tool ❷.

| |
|---|
| Pressure testing tool (61029094000) (☛ p. 232) |

– Mount special tool ❸ with nozzle code **0,60**.

| |
|---|
| Testing hose (61029093000) (☛ p. 231) |

– Insert the hose end in a fuel canister.
Guideline

| | |
|---|---|
| Minimum fuel canister capacity | 10 l (2.6 US gal) |

– Perform the **"Actuator Test"** > **"Function test of fuel pump control"**.
Guideline

| | |
|---|---|
| Maximum duration of actuator test | 3 min |

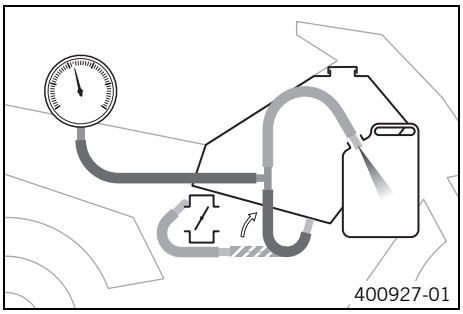


– Check the fuel pressure with the filler cap closed.

| Fuel pressure | |
|---|---|
| When the fuel pump is active | 3.3… 3.7 bar (48… 54 psi) |

» If the specification is not reached:
  – Open the filler cap. (☛ p. 61)
  – Check the fuel tank breather.

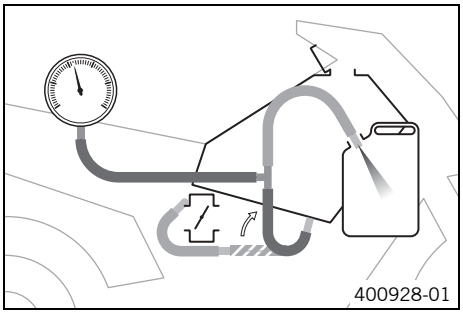


– Check the fuel pressure with the filler cap open.

| Fuel pressure | |
|---|---|
| When the fuel pump is active | 3.3… 3.7 bar (48… 54 psi) |

» If the specification is not reached:
  – Check that the fuel line is clear.
  – Change the fuel filter. (☛ p. 64)
  – Change the fuel pump. (☛ p. 67)

– Stop the **"Function test of fuel pump control"** actuator test by pressing the **"Quit"** button.
– Dismantle the special tools.
– Connect the fuel hose connection.

## 11.8 Changing the fuel filter

**Danger**

**Fire hazard** Fuel is highly flammable.

- Never refuel the vehicle near open flames or burning cigarettes, and always switch off the engine first. Be careful that no fuel is spilt, especially on hot vehicle components. Clean up spilt fuel immediately.
- The fuel in the fuel tank expands when warm and may emerge if overfilled. Follow the instructions on refueling.

**Warning**

**Danger of poisoning** Fuel is poisonous and a health hazard.

- Fuel must not come into contact with the skin, eyes, or clothing. Do not breathe in the fuel vapors. If contact occurs with the eyes, rinse with water immediately and contact a physician. Immediately clean contaminated areas on the skin with soap and water. If fuel is swallowed, contact a physician immediately. Change clothing that is contaminated with fuel. Store fuel properly in a suitable canister and keep away from children.

**Warning**

**Environmental hazard** Improper handling of fuel is a danger to the environment.

- Do not allow fuel to get into the ground water, the ground, or the sewage system.

**Preparatory work**

- Remove the seat. (☛ p. 61)
- Take off the side cover. (☛ p. 62)
- Remove the air filter box. (☛ p. 57)
- Switch off all power consumers and switch off the engine.
- Disconnect the battery. (☛ p. 83)
- Drain the fuel from the fuel tank into a suitable container.

**Main work**

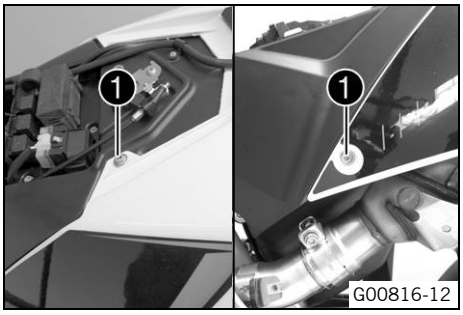


- Remove screws ❶.

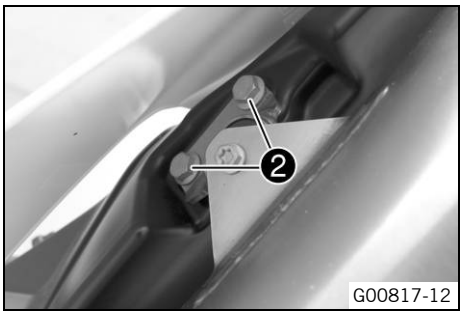


- Lift the rear fairing.
- Remove screws ❷.

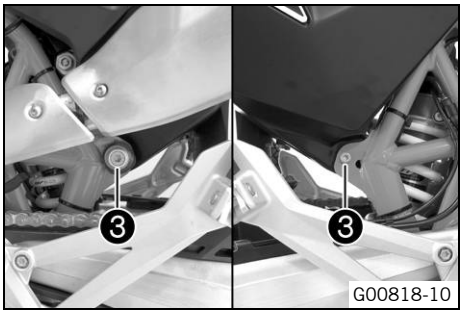


- Remove screw ❸ on both sides.
- Swing the rear end upward and secure it.

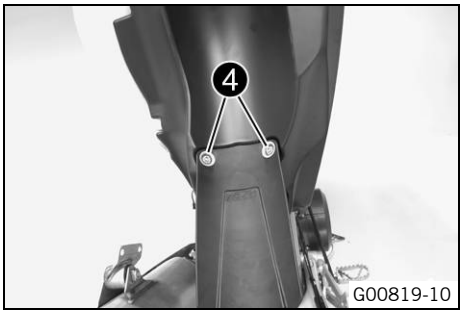


– Remove screws ❹ and the splash protector.

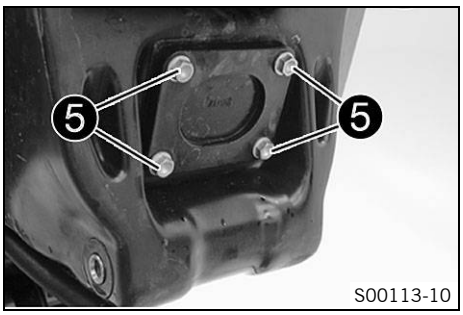


– Remove screws ❺.
– Pull out the fuel pump.

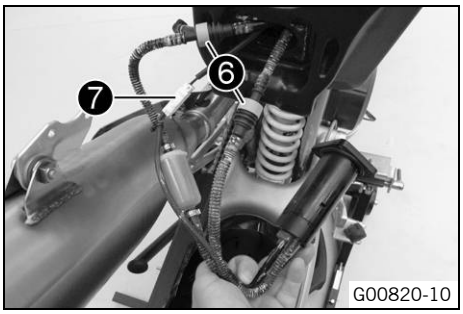


– Disconnect both fuel hose connections ❻.
– Unplug connector ❼. Remove the fuel pump.

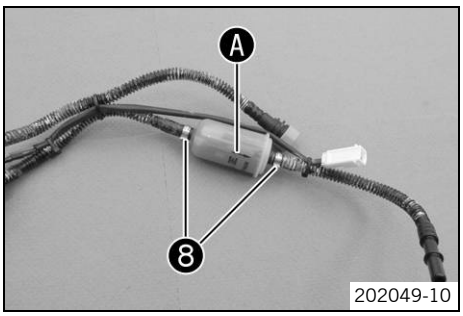


– Remove hose clamps ❽.
– Remove fuel filter.
– Mount the new fuel filter.
  ✔ Arrow Ⓐ points away from the fuel pump.
– Mount hose clamps ❽.

| Hose clamp pliers (60029057000) (☛ p. 230) |
|---|

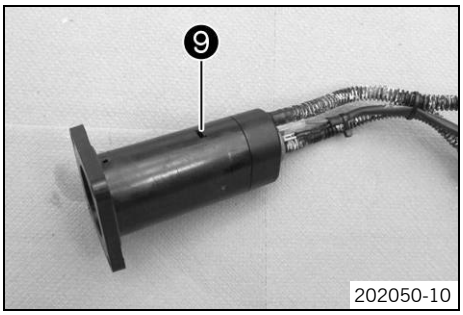


– Press locking mechanism ❾ on both sides.
– Pull off the fuel pump housing.

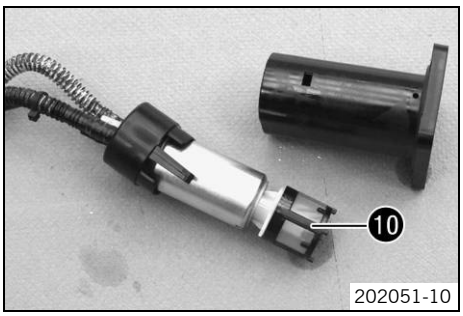


– Change fuel screen ❿.
– Mount the fuel pump housing.

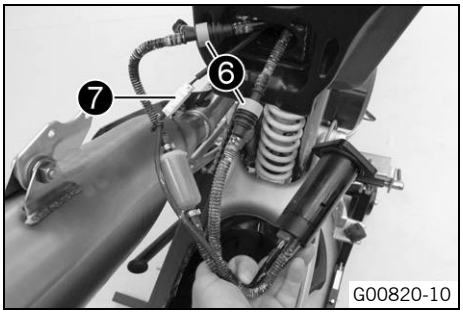


– Connect both fuel hose connections ❻.
– Attach connector ❼.

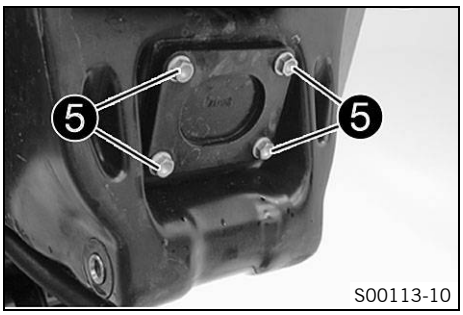


– Position the fuel pump.
– Mount and tighten screws ❺.

Guideline

| | | |
|---|---|---|
| Screw, fuel pump | M5 | 4 Nm (3 lbf ft) |

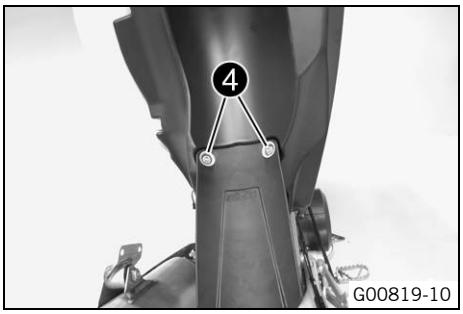


– Position the splash protector. Mount and tighten screws ❹.

Guideline

| | | |
|---|---|---|
| Remaining screws, chassis | M5 | 4 Nm (3 lbf ft) |

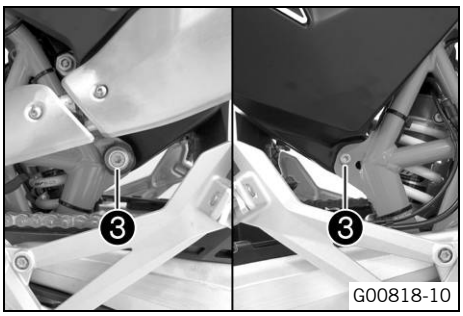


– Position the rear end.
– Mount and tighten screw ❸ on both sides.

Guideline

| | | | |
|---|---|---|---|
| Screw, fuel tank, bottom | M8 | 25 Nm (18.4 lbf ft) | **Loctite® 243™** |

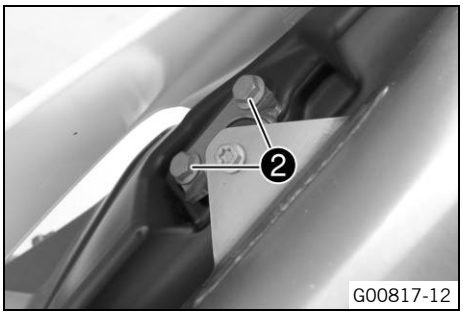


– Lift the rear fairing.
– Mount and tighten screws ❷.

Guideline

| | | |
|---|---|---|
| Screw, main silencer holder on fuel tank | M8 | 25 Nm (18.4 lbf ft) |

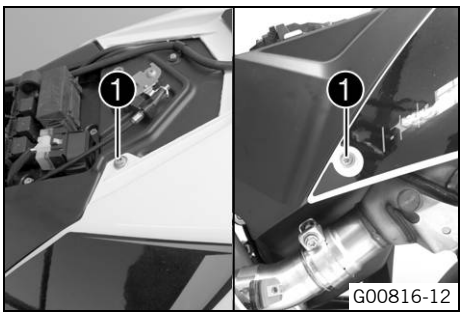


– Mount and tighten screws ❶.

Guideline

| | | |
|---|---|---|
| Screw, side cover | M6 | 5 Nm (3.7 lbf ft) |

**Finishing work**

– Install the air filter box. (☛ p. 59)
– Mount the side cover. (☛ p. 62)

- Disconnect the battery. (☛ p. 83)
- Mount the seat. (☛ p. 62)
- Set the clock. (☛ p. 99)

## 11.9 Changing the fuel pump

**Danger**

**Fire hazard** Fuel is highly flammable.

- Never refuel the vehicle near open flames or burning cigarettes, and always switch off the engine first. Be careful that no fuel is spilt, especially on hot vehicle components. Clean up spilt fuel immediately.
- The fuel in the fuel tank expands when warm and may emerge if overfilled. Follow the instructions on refueling.

**Warning**

**Danger of poisoning** Fuel is poisonous and a health hazard.

- Fuel must not come into contact with the skin, eyes, or clothing. Do not breathe in the fuel vapors. If contact occurs with the eyes, rinse with water immediately and contact a physician. Immediately clean contaminated areas on the skin with soap and water. If fuel is swallowed, contact a physician immediately. Change clothing that is contaminated with fuel. Store fuel properly in a suitable canister and keep away from children.

**Warning**

**Environmental hazard** Improper handling of fuel is a danger to the environment.

- Do not allow fuel to get into the ground water, the ground, or the sewage system.

**Preparatory work**

- Remove the seat. (☛ p. 61)
- Take off the side cover. (☛ p. 62)
- Remove the air filter box. (☛ p. 57)
- Switch off all power consumers and switch off the engine.
- Disconnect the battery. (☛ p. 83)
- Drain the fuel from the fuel tank into a suitable container.

**Main work**

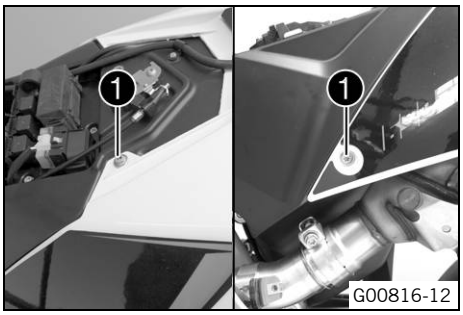


- Remove screws ❶.

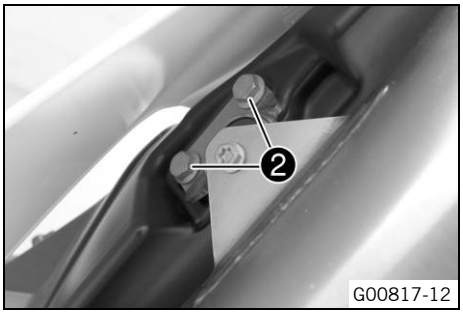


- Lift the rear fairing.
- Remove screws ❷.

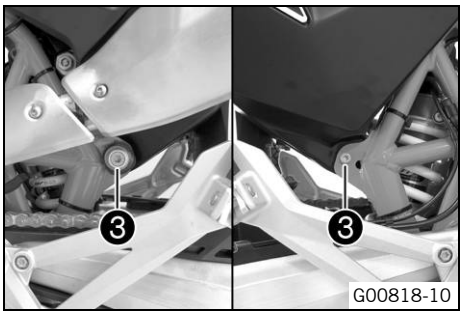


- Remove screw ❸ on both sides.
- Swing the rear end upward and secure it.

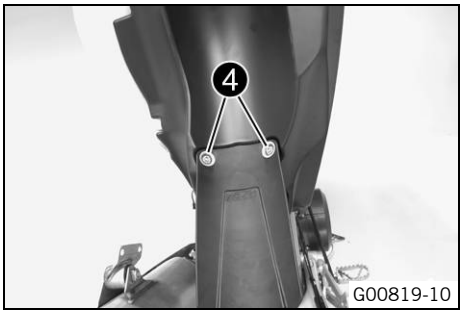


– Remove screws ❹ and the splash protector.

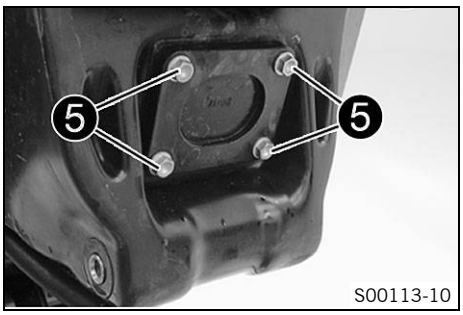


– Remove screws ❺.
– Pull out the fuel pump.

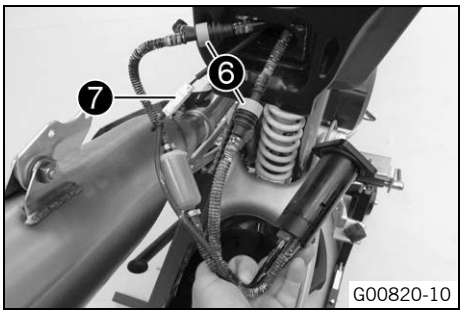


– Disconnect both fuel hose connections ❻.
– Disconnect plug-in connector ❼. Disconnect the fuel pump.
– Connect the new fuel pump, attaching both fuel hose connections ❻.
– Connect plug-in connector ❼.

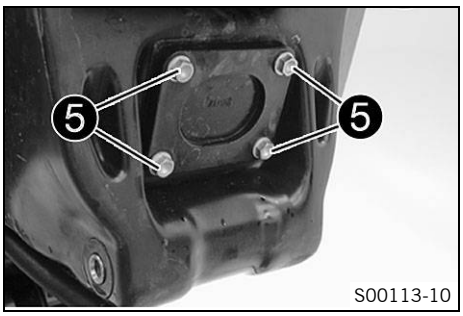


– Position the fuel pump.
– Mount and tighten screws ❺.

Guideline

| | | |
|---|---|---|
| Screw, fuel pump | M5 | 4 Nm (3 lbf ft) |

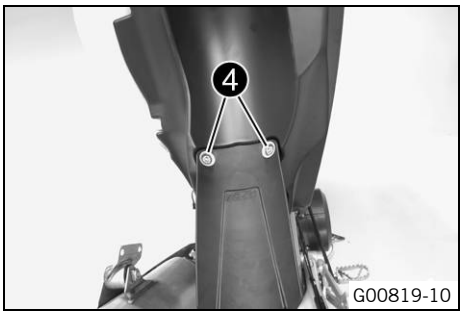


– Position the splash protector. Mount and tighten screws ❹.

Guideline

| | | |
|---|---|---|
| Remaining screws, chassis | M5 | 4 Nm (3 lbf ft) |

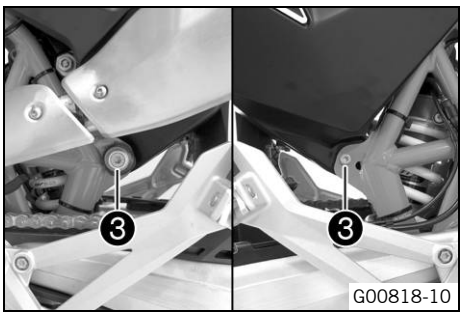


– Position the rear end.
– Mount and tighten screw ❸ on both sides.

Guideline

| | | | |
|---|---|---|---|
| Screw, fuel tank, bottom | M8 | 25 Nm (18.4 lbf ft) | **Loctite® 243™** |

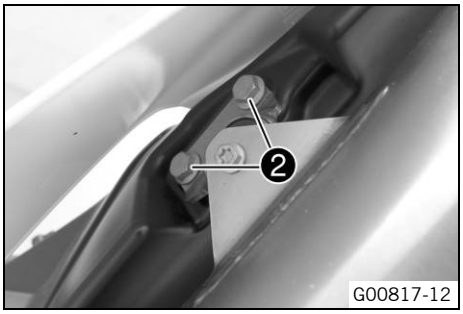


– Lift the rear fairing.
– Mount and tighten screws ❷.

Guideline

| | | |
|---|---|---|
| Screw, main silencer holder on fuel tank | M8 | 25 Nm (18.4 lbf ft) |

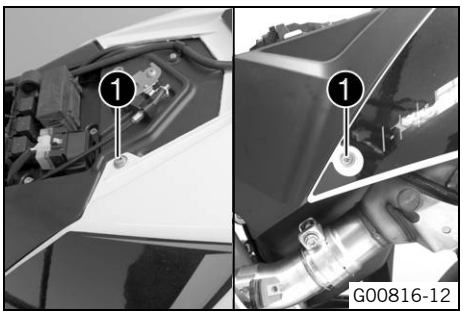


– Mount and tighten screws ❶.

Guideline

| | | |
|---|---|---|
| Screw, side cover | M6 | 5 Nm (3.7 lbf ft) |

**Finishing work**

– Install the air filter box. (☛ p. 59)
– Mount the side cover. (☛ p. 62)
– Disconnect the battery. (☛ p. 83)
– Mount the seat. (☛ p. 62)
– Set the clock. (☛ p. 99)

## 12.1 Checking the tire air pressure

**Info**
Low tire air pressure leads to abnormal wear and overheating of the tire.
Correct tire air pressure ensures optimal riding comfort and maximum tire service life.

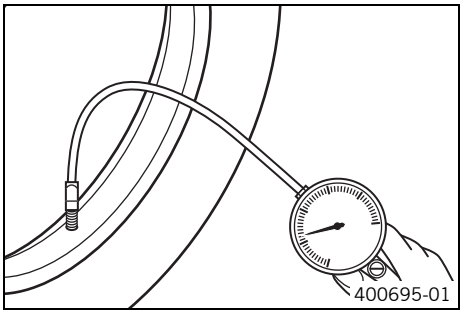


– Remove the protection cap.
– Check tire air pressure when tires are cold.

| Tire air pressure, solo | |
|---|---|
| Front | 2.0 bar (29 psi) |
| Rear | 2.0 bar (29 psi) |

| Tire air pressure with passenger / fully loaded | |
|---|---|
| Front | 2.0 bar (29 psi) |
| Rear | 2.2 bar (32 psi) |

» If the tire pressure does not meet specifications:
  – Correct tire pressure.
– Mount the protection cap.

## 12.2 Checking the tire condition

**Warning**
**Danger of accidents** Uncontrollable vehicle handling in the event of a flat tire.

– In the interest of safety, replace damaged or worn tires immediately.

**Warning**
**Danger of crashing** Poor vehicle handling due to different tire tread patterns on front and rear wheels.

– The front and rear wheels must be fitted with tires with similar tread patterns to prevent loss of control over the vehicle.

**Warning**
**Danger of accidents** Uncontrollable handling characteristic due to non-approved and/or non-recommended tires/wheels.

– Only tires/wheels approved by KTM and with the corresponding speed index should be used.

**Warning**
**Danger of accidents** Reduced road grip with new tires.

– New tires have a smooth rolling surface and therefore cannot provide full road grip. The entire rolling surface must be roughened in the first 200 kilometers (124.3 miles) by moderate riding at alternating angles. The full grip levels are not achieved until the tires have been run in.

**Info**
The type, condition and air pressure of the tires all have a major impact on the riding behavior of the motorcycle.
Worn tires have a negative effect on riding behavior, especially on wet surfaces.

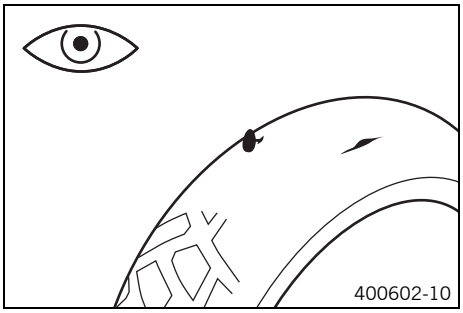


– Check the front and rear tires for cuts, run-in objects and other damage.
  » If the tires exhibit cuts, run-in objects or other damage:
    – Change the tires.
– Check the depth of the tread.

**Info**
Note local national regulations concerning the minimum tread depth.

| Minimum tread depth | ≥ 2 mm (≥ 0.08 in) |
|---|---|

» If the tread depth is less than the minimum permissible depth:
  – Change the tires.
– Check the age of the tires.

**Info**
The tire's date of manufacture is usually part of the tire markings and is indicated by the last four digits of the **DOT** marking. The first two digits refer to the week of manufacture and last two digits refer to the year of manufacture.
KTM recommends that the tires are changed regardless of the actual wear, at the latest after 5 years.

» If a tire is more than 5 years old:
  – Change the tires.

## 12.3 Checking the brake discs

**Warning**
**Danger of accidents** Reduced braking efficiency due to worn brake disc(s).
– Change the worn brake disc(s) without delay.

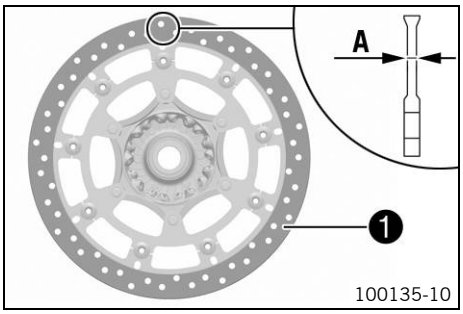


– Check the thickness of the front and rear brake discs in several places to ensure that it conforms to measurement A.

**Info**
Wear reduces the thickness of the brake disc at the contact surface 1 of the brake disc.

| Brake discs - wear limit | |
|---|---|
| Front | 4.0 mm (0.157 in) |
| Rear | 4.5 mm (0.177 in) |

» If the brake disc thickness is less than the specified value:
  – Replace the brake disc.
– Check the front and rear brake discs for damage, cracks, and deformation.
» If damage, cracks, or deformation are visible on the brake disc:
  – Replace the brake disc.

## 12.4 Checking the spoke tension

**Warning**
**Danger of accidents** Instable handling due to incorrect spoke tension.
– Ensure that the spoke tension is correct.

**Info**
A loose spoke causes wheel imbalance and rapidly leads to more loose spokes.
If the spokes are too tight, they can break due to local overload.
Check the spoke tension regularly, especially on a new motorcycle.

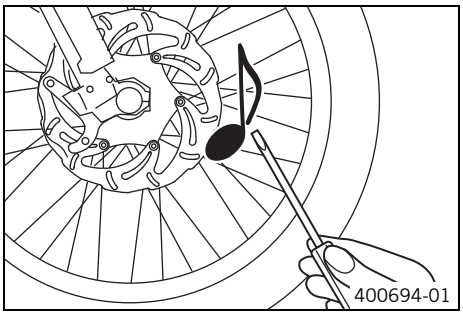


– Briefly strike each spoke with a screwdriver blade.

**Info**
The frequency of the tone is a function of the spoke length and spoke diameter.
If you hear different tone frequencies from individual spokes of the same length and thickness, this is an indication of different spoke tensions.

| You should hear a high note. |
|---|

» If the spoke tensions differ:
  – Correct the spoke tension.

## 12.5 Checking the rim run-out

**Warning**
**Danger of accidents** Instable handling due to incorrect spoke tension.

– Ensure that the spoke tension is correct.

**Info**
A loose spoke can cause wheel imbalance, which leads to more loose spokes in a short time.
If the spokes are too tight, they can break due to local overload.
Check the spoke tension regularly, especially on a new motorcycle.

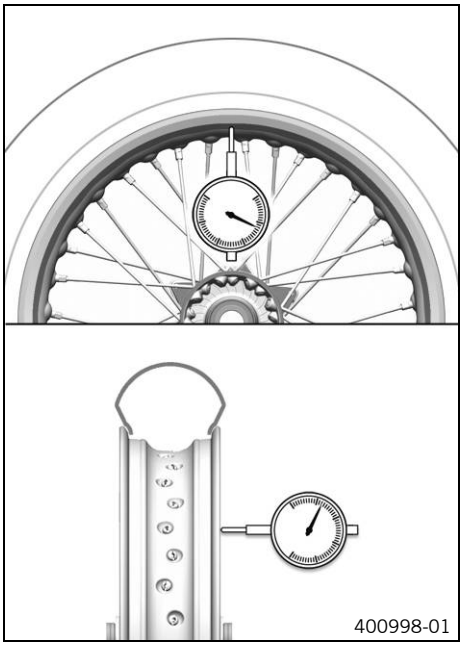


– Check the axial run-out and radial run-out of the rim.

| Axial run-out | |
|---|---|
| outside of the rim joint | < 1.8 mm (< 0.071 in) |

| Radial run-out | |
|---|---|
| outside of the rim joint | < 1.8 mm (< 0.071 in) |

» If the measured value is greater than the specified value:
  – Center the rim.

  **Info**
  Center the rim by tightening the spoke nipple on the opposite side of the rim run-out. Change the rim if it is excessively deformed.

  – Correct the spoke tension.

## 12.6 Front wheel

### 12.6.1 Removing front wheel

**Preparatory work**
– Raise the motorcycle with the rear wheel stand. (☛ p. 10)
– Raise the motorcycle with the front wheel stand. (☛ p. 10)

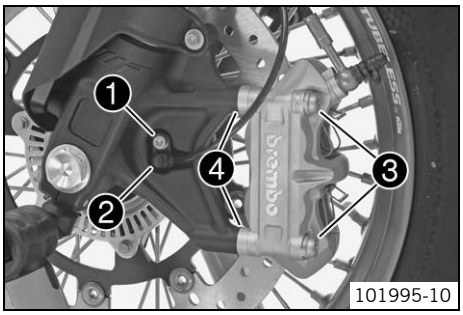


**Main work**
– Remove screw ❶ and pull wheel speed sensor ❷ out of the hole.
– Remove screws ❸ and spacers ❹.
– Press back the brake linings with a light lateral tilting of the brake caliper on the brake disc. Pull the brake caliper carefully back from the brake disc and hang it to one side.

**Info**
Do not pull the handbrake lever when the brake caliper is removed.

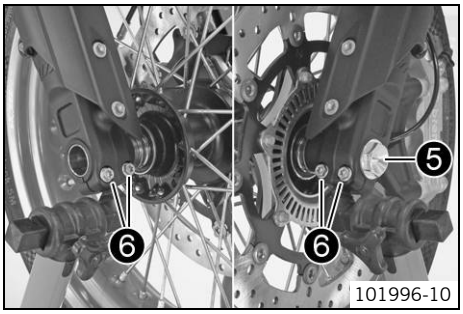


– Loosen screw ❺ and screws ❻.
– Unscrew screw ❺ about 6 turns and press your hand on the screw to push the wheel spindle out of the axle clamp. Remove screw ❺.

**Warning**
**Danger of accidents** Reduced braking effect caused by damaged brake discs.

– Always lay the wheel down in such a way that the brake discs are not damaged.

– Holding the front wheel, withdraw the wheel spindle. Take the front wheel out of the fork.
– Remove spacers ❼.

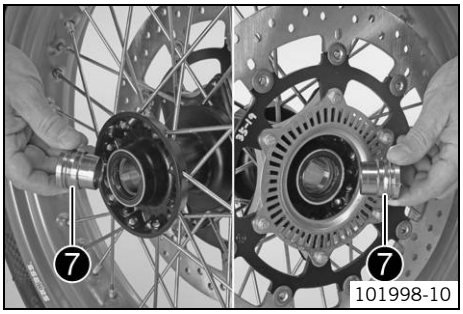


## 12.6.2 Installing the front wheel

**Warning**

**Danger of accidents** Reduced braking efficiency due to oil or grease on the brake discs.

– Always keep the brake discs free of oil and grease, and clean them with brake cleaner when necessary.

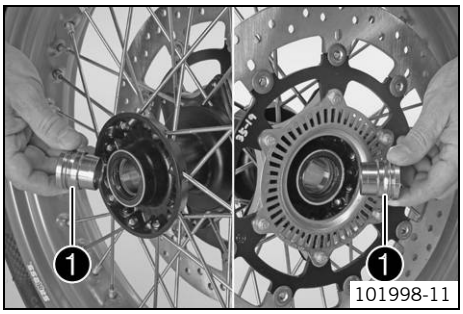


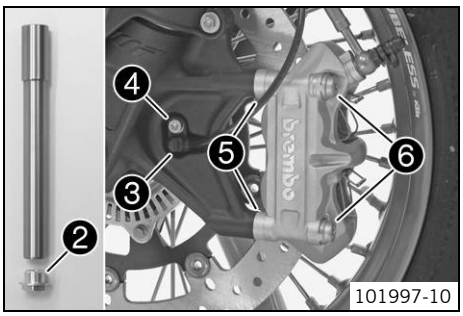


**Main work**

– Check the wheel bearing for damage and wear.
  » If the wheel bearing is damaged or worn:
    – Replace the wheel bearing.
– Clean and grease the shaft seal rings and bearing surface of the distance bushings ❶.

| |
|---|
| Long-life grease (☛ p. 226) |

– Insert the spacers.
– Clean and grease the thread of the wheel spindle and screw ❷.

| |
|---|
| Long-life grease (☛ p. 226) |

– Lift the front wheel into the fork, position it, and insert the wheel spindle. Mount and tighten screw ❷.

Guideline

| | | |
|---|---|---|
| Screw, front wheel spindle | M24x1.5 | 45 Nm (33.2 lbf ft) |

– Insert wheel speed sensor ❸ into the hole. Mount and tighten screw ❹.

Guideline

| | | |
|---|---|---|
| Remaining screws, chassis | M6 | 10 Nm (7.4 lbf ft) |

– Position the brake caliper and check that the brake linings are seated correctly.
– Position spacers ❺. Mount screws ❻ but do not tighten.
– Operate the hand brake lever repeatedly until the brake linings are in contact with the brake disc and there is a pressure point. Fix the hand brake lever in the activated position.
  ✔ The brake caliper straightens.
– Tighten screws ❻.

Guideline

| | | | |
|---|---|---|---|
| Screw, front brake caliper | M10x1.25 | 45 Nm (33.2 lbf ft) | **Loctite® 243™** |

– Remove the fixation of the hand brake lever.

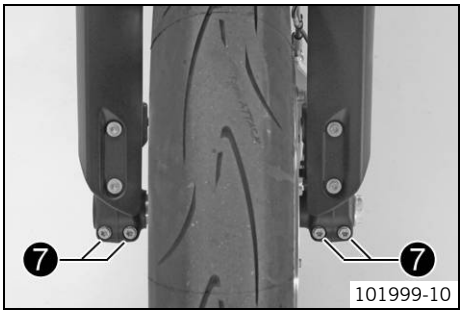


– Take the motorcycle off of the front wheel stand. (☛ p. 11)
– Pull the front wheel brake and push down hard on the fork several times to align the fork legs.
– Tighten screws ❼.

Guideline

| | | |
|---|---|---|
| Screw, fork stub | M8 | 15 Nm (11.1 lbf ft) |

**Finishing work**
– Take the motorcycle off of the rear wheel stand. (☛ p. 10)

### 12.6.3 Removing the brake disc of the front brake

**Preparatory work**
– Raise the motorcycle with the rear wheel stand. (☛ p. 10)
– Raise the motorcycle with the front wheel stand. (☛ p. 10)
– Remove front wheel. (☛ p. 72)

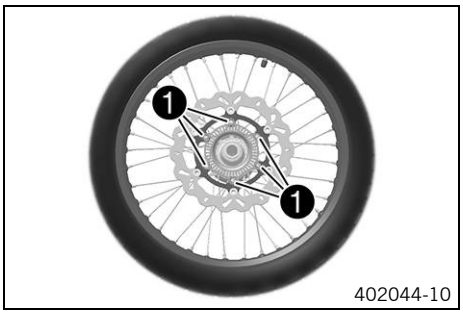


**Main work**
– Remove screws ❶. Take off the brake disc with the ABS sensor wheel.

### 12.6.4 Installing the brake disc of the front brake

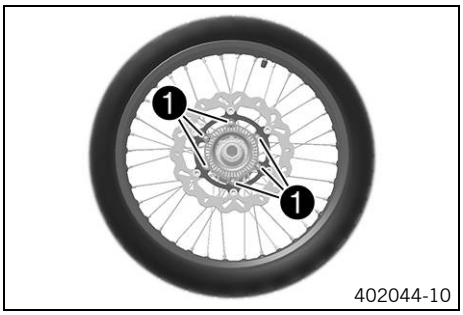


**Main work**
– Clean the contact surface of the brake disc.
– Position the brake disc with the ABS sensor wheel.
  ✔ The lettering on the ABS sensor wheel is located on the outside.
– Mount and tighten screws ❶.

Guideline

| | | | |
|---|---|---|---|
| Screw, front brake disc | M6 | 14 Nm (10.3 lbf ft) | **Loctite® 243™** |

**Finishing work**
– Install the front wheel. (☛ p. 73)
– Take the motorcycle off of the rear wheel stand. (☛ p. 10)

## 12.7 Rear wheel

### 12.7.1 Removing rear wheel

**Preparatory work**
– Raise the motorcycle with the rear wheel stand. (☛ p. 10)

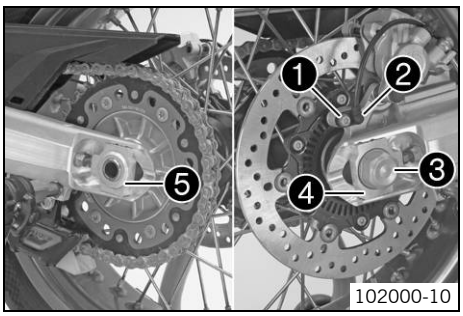


**Main work**
– Press the brake caliper by hand on to the brake disc in order to press back the brake piston.
– Remove screw ❶ and pull wheel speed sensor ❷ out of the hole.
– Remove nut ❸. Remove chain adjuster ❹.

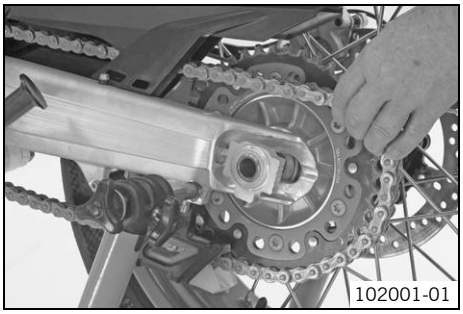
102001-01

– Pull out wheel spindle ❺ to the point where the chain adjuster is no longer in contact with the adjusting screw.
– Push the rear wheel forwards as far as possible and take the chain off the rear sprocket.
– Pull out the wheel spindle.

**Warning**
**Danger of accidents** Reduced braking effect caused by damaged brake discs.
– Always lay the wheel down in such a way that the brake discs are not damaged.

– Take the rear wheel out of the swing arm.

**Info**
Do not operate the foot brake when the rear wheel is removed.

### 12.7.2 Installing the rear wheel

**Warning**
**Danger of accidents** Reduced braking efficiency due to oil or grease on the brake discs.
– Always keep the brake discs free of oil and grease, and clean them with brake cleaner when necessary.

**Warning**
**Danger of accidents** No braking effect when operating the rear brake.
– After installing the rear wheel, always operate the foot brake until the pressure point is reached.

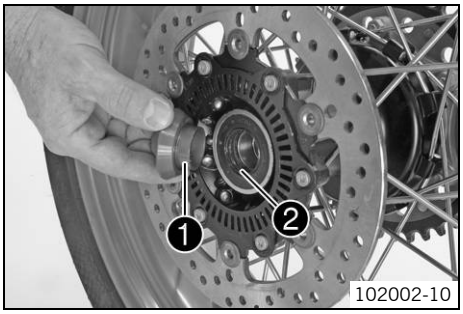

102002-10

**Main work**
– Check the rear hub rubber dampers. (☛ p. 80)
– Check the wheel bearing for damage and wear.
  » If the wheel bearing is damaged or worn:
    – Replace the wheel bearing.
– Remove bushing ❶. Clean and grease the roll surfaces of the bushing and the shaft seal ring ❷.

| Long-life grease (☛ p. 226) |
|---|

– Mount the bushing.
– Clean and grease the threads of the wheel spindle and nut ❸.

| Long-life grease (☛ p. 226) |
|---|

– Mount the rubber damper and rear sprocket carrier in the rear wheel.
– Position the rear wheel.
  ✔ The brake linings are correctly positioned.

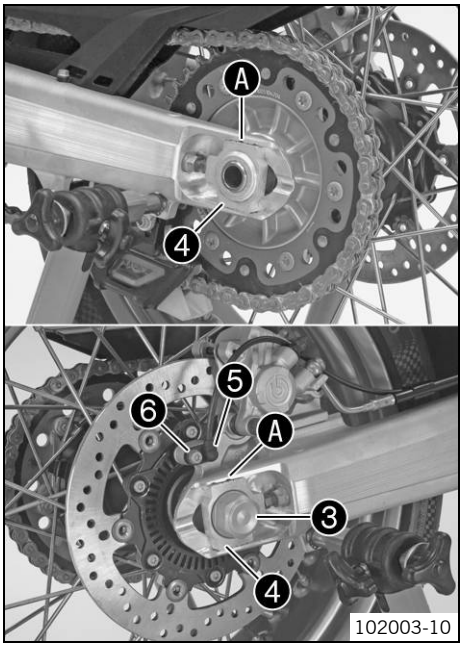


– Push the rear wheel forward as far as possible and lay the chain on the rear sprocket.
– Mount the wheel spindle, chain adjuster ❹, and nut ❸.

Guideline

| |
|---|
| In order for the rear wheel to be correctly aligned, the markings on the left and right chain adjusters must be in the same position relative to the reference marks Ⓐ. |

**Info**
Mount the left and right chain adjusters ❹ in the same position.

– Tighten nut ❸.

Guideline

| | | |
|---|---|---|
| Nut, rear wheel spindle | M25x1.5 | 90 Nm (66.4 lbf ft) |

– Operate the foot brake lever repeatedly until the brake linings are in contact with the brake disc and there is a pressure point.
– Insert wheel speed sensor ❺ into the hole. Mount and tighten screw ❻.

Guideline

| | | |
|---|---|---|
| Remaining screws, chassis | M6 | 10 Nm (7.4 lbf ft) |

– Check the chain tension.

**Finishing work**
– Take the motorcycle off of the rear wheel stand. (☛ p. 10)

## 12.7.3 Removing the brake disc of the rear brake

**Preparatory work**
– Raise the motorcycle with the rear wheel stand. (☛ p. 10)
– Remove the rear wheel. (☛ p. 74)

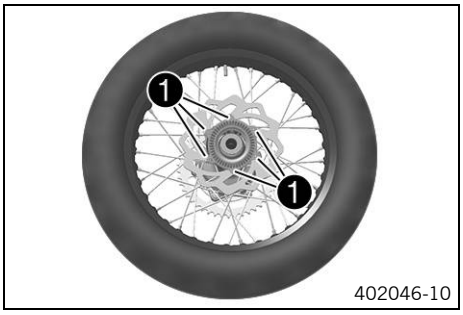


**Main work**
– Remove screws ❶. Take off the brake disc with the ABS sensor wheel.

## 12.7.4 Installing the brake disc of the rear brake

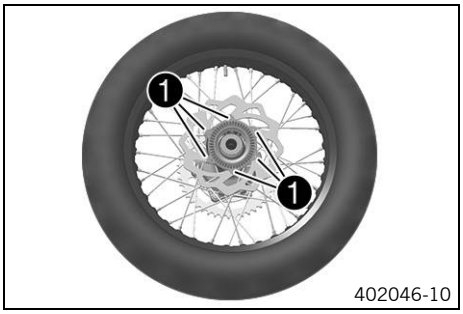


**Main work**
– Clean the contact surface of the brake disc.
– Position the brake disc with the ABS sensor wheel.
  ✓ The lettering on the ABS sensor wheel is located on the outside.
– Mount and tighten screws ❶.

Guideline

| | | | |
|---|---|---|---|
| Screw, rear brake disc | M6 | 14 Nm (10.3 lbf ft) | **Loctite® 243™** |

**Finishing work**
– Install the rear wheel. (☛ p. 75)
– Take the motorcycle off of the rear wheel stand. (☛ p. 10)

### 12.7.5 Checking the chain tension

**Warning**

**Danger of accidents** Danger caused by incorrect chain tension.

– If the chain is too taut, the components of the secondary power transmission (chain, engine sprocket, rear sprocket, bearings in the transmission and in the rear wheel) will be under additional load. In addition to premature wear, this can cause the chain or the countershaft of the transmission to break in extreme cases. If the chain is too loose, however, it may fall off the engine sprocket or rear sprocket and block the rear wheel or damage the engine. Ensure that the chain tension is correct and adjust it if necessary.

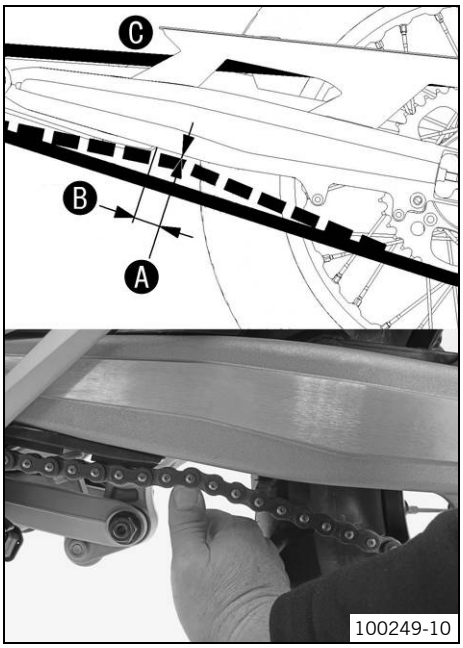


– Lean the motorcycle on the side stand.
– Shift gear to neutral.
– Push the chain upward at a distance B from the chain sliding guard and determine the chain tension A.

**Info**

The upper chain section C must be taut.
Chain wear is not always even. Repeat this measurement at different chain positions.

| | |
|---|---|
| Chain tension | 5 mm (0.2 in) |

| | |
|---|---|
| Distance to chain sliding guard | 30 mm (1.18 in) |

» If the chain tension does not meet specifications:
  – Adjust the chain tension. (☛ p. 77)

### 12.7.6 Adjusting the chain tension

**Warning**

**Danger of accidents** Danger caused by incorrect chain tension.

– If the chain is too taut, the components of the secondary power transmission (chain, engine sprocket, rear sprocket, bearings in the transmission and in the rear wheel) will be under additional load. In addition to premature wear, this can cause the chain or the countershaft of the transmission to break in extreme cases. If the chain is too loose, however, it may fall off the engine sprocket or rear sprocket and block the rear wheel or damage the engine. Ensure that the chain tension is correct and adjust it if necessary.

**Preparatory work**

– Check the chain tension. (☛ p. 77)

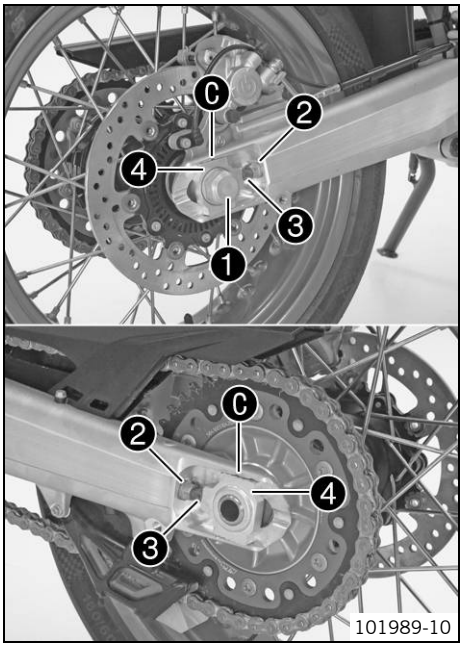


**Main work**

- Loosen nut ❶.
- Loosen nuts ❷.
- Adjust the chain tension by turning adjusting screws ❸ on the left and right.

  Guideline

| | |
|---|---|
| Chain tension | 5 mm (0.2 in) |
| Turn the left and right adjusting screws ❸ so that the markings on the left and right chain adjusters ❹ are in the same position relative to the reference marks Ⓒ. The rear wheel is then correctly aligned. | |

**Info**
The upper chain section must be taut.
Chain wear is not always even. Repeat this measurement at different chain positions.

- Tighten nuts ❷.
- Make sure that the chain adjusters ❹ are installed correctly on adjusting screws ❸.
- Tighten nut ❶.

  Guideline

| | | |
|---|---|---|
| Nut, rear wheel spindle | M25x1.5 | 90 Nm (66.4 lbf ft) |

## 12.7.7 Adjusting chain guide

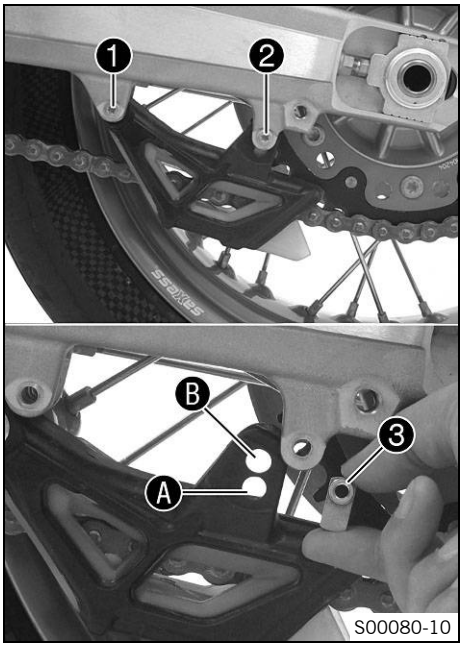


- Remove screws ❶ and ❷. Take off the chain guide.

**Condition**
Number of teeth: ≤ 44 teeth

- Insert nut ❸ in hole Ⓐ. Position the chain guide.
- Mount and tighten screws ❶ and ❷.

  Guideline

| | | |
|---|---|---|
| Screw, chain guide | M6 | 8 Nm (5.9 lbf ft) |

**Condition**
Number of teeth: ≥ 45 teeth

- Insert nut ❸ in hole Ⓑ. Position the chain guide.
- Mount and tighten screws ❶ and ❷.

  Guideline

| | | |
|---|---|---|
| Screw, chain guide | M6 | 8 Nm (5.9 lbf ft) |

## 12.7.8 Checking the chain, rear sprocket, engine sprocket, and chain guide

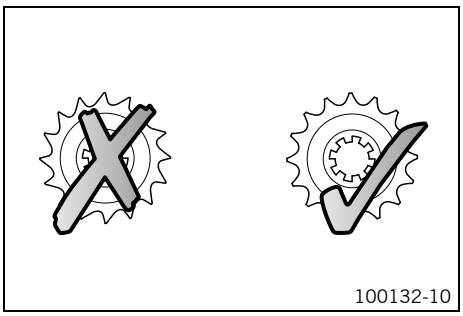


**Preparatory work**

- Raise the motorcycle with the rear wheel stand. (☛ p. 10)

**Main work**

- Shift the transmission to neutral.
- Check the rear sprocket and engine sprocket for wear.
  - » If the rear sprocket and engine sprocket are worn:
    - Change the power set.

**Info**
The engine sprocket, rear sprocket, and chain should always be replaced together.

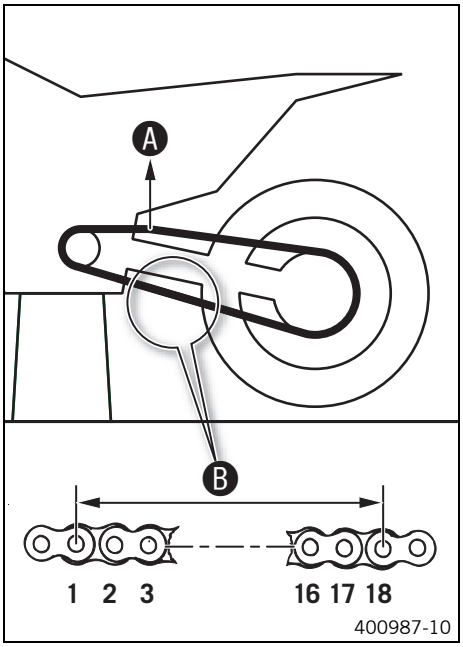


– Pull on the upper section of the chain with the specified weight A.

Guideline

| | |
|---|---|
| Weight of chain wear measurement | 15 kg (33 lb.) |

– Measure distance B of 18 chain links in the lower chain section.

**Info**
Chain wear is not always even, so you should repeat this measurement at different chain positions.

| | |
|---|---|
| Maximum distance B at the longest chain section | 272 mm (10.71 in) |

» If the distance B is greater than the specified measurement:
  – Replace the chain.

**Info**
When the chain is replaced, the rear sprocket and engine sprocket should also be changed.
New chains wear out faster on old, worn sprockets.

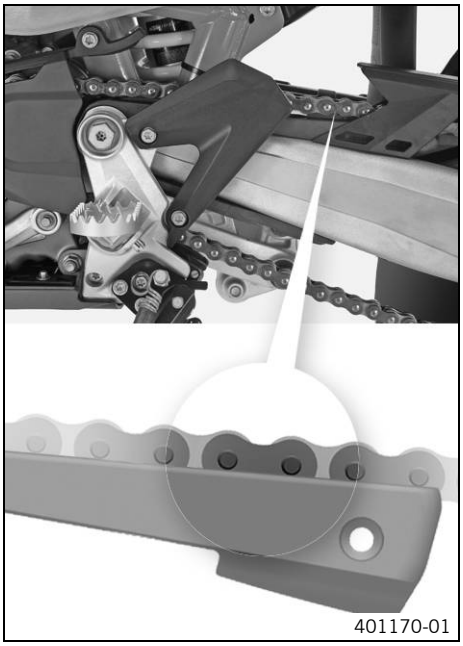


– Check the chain sliding guard for wear.
  » If the lower edge of the chain pins is in line with or below the chain sliding guard:
    – Replace the chain sliding guard.
– Check that the chain sliding guard is firmly seated.
  » If the chain sliding guard is loose:
    – Tighten the chain sliding guard.

Guideline

| | | | |
|---|---|---|---|
| Screw, chain sliding guard | M6 | 8 Nm (5.9 lbf ft) | **Loctite® 243™** |

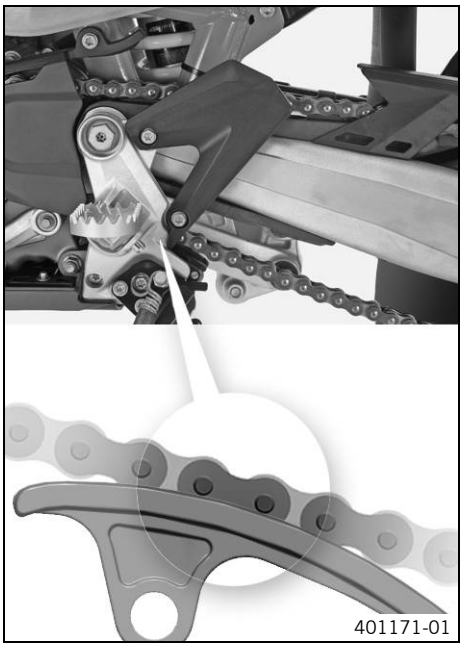


– Check the chain sliding piece for wear.
  » If the lower edge of the chain pins is in line with or below the chain sliding piece:
    – Change the chain sliding piece.
– Check that the chain sliding piece is firmly seated.
  » If the chain sliding piece is loose:
    – Tighten the chain sliding piece.

Guideline

| | | |
|---|---|---|
| Screw, chain sliding piece | M8 | 15 Nm (11.1 lbf ft) |

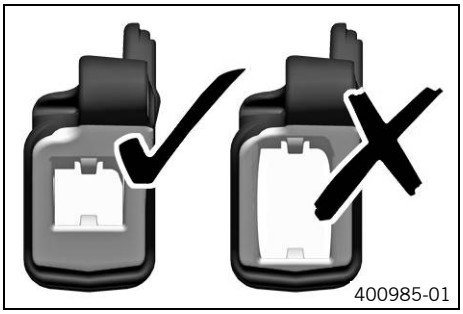
400985-01

– Check the chain guide for wear.

**Info**
Wear is visible on the front of the chain guide.

» If the light part of the chain guide is worn:
  – Change the chain guide.

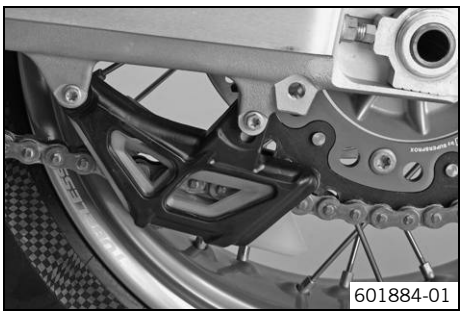
601884-01

– Check that the chain guide is firmly seated.
  » If the chain guide is loose:
    – Tighten the chain guide.
    Guideline

| | | |
|---|---|---|
| Remaining screws, chassis | M6 | 10 Nm (7.4 lbf ft) |

**Finishing work**
– Take the motorcycle off of the rear wheel stand. (☛ p. 10)

## 12.7.9 Cleaning the chain

**Warning**
**Danger of accidents** Oil or grease on the tires reduces their grip.
– Remove oil and grease with a suitable cleaning material.

**Warning**
**Danger of accidents** Reduced braking efficiency due to oil or grease on the brake discs.
– Always keep the brake discs free of oil and grease, and clean them with brake cleaner when necessary.

**Warning**
**Environmental hazard** Hazardous substances cause environmental damage.
– Oil, grease, filters, fuel, cleaners, brake fluid, etc., should be disposed of as stipulated in applicable regulations.

**Info**
The service life of the chain depends largely on its maintenance.

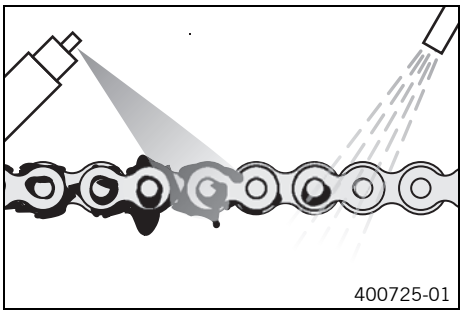
400725-01

– Clean the chain regularly.
– Rinse off loose dirt with a soft jet of water.
– Remove old grease remains with chain cleaner.

| |
|---|
| Chain cleaner (☛ p. 226) |

– After drying, apply chain spray.

| |
|---|
| Chain lube for road use (☛ p. 226) |

## 12.7.10 Checking the rear hub rubber dampers

**Info**
The engine power is transmitted from the rear sprocket to the rear wheel via 6 rubber dampers. They eventually wear out during operation. If the rubber dampers are not changed in time, the rear sprocket carrier and the rear hub will be damaged.

**Preparatory work**
– Raise the motorcycle with the rear wheel stand. (☛ p. 10)
– Remove the rear wheel. (☛ p. 74)

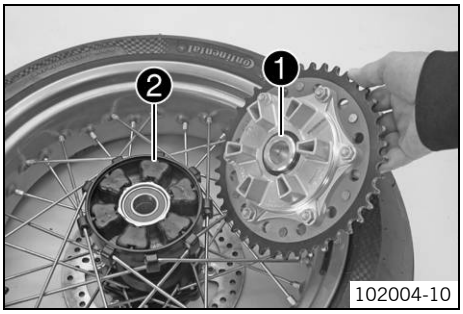


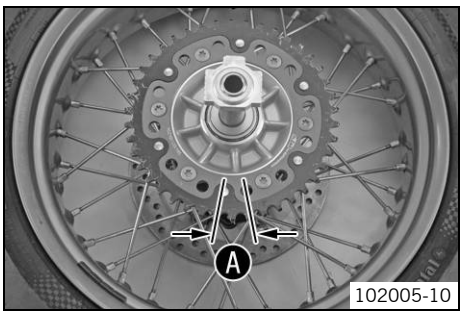


**Main work**

- Check bearing ❶.
  - » If the bearing is damaged or worn:
    - Replace the bearings.
- Check rubber dampers ❷ of the rear hub for damage and wear.
  - » If the rubber dampers of the rear hub are damaged or worn:
    - Change all rubber dampers in the rear hub.

- Lay the rear wheel on a workbench with the rear sprocket facing upwards and insert the wheel spindle in the hub.
- To check play Ⓐ, hold the rear wheel tight and try to rotate the rear sprocket with your hand.

**Info**
Measure the play on the outside of the rear sprocket.

| | |
|---|---|
| Play in rubber dampers, rear wheel | ≤ 5 mm (≤ 0.2 in) |

  - » If play Ⓐ is larger than the specified value:
    - Change all rubber dampers in the rear hub.

**Finishing work**

- Install the rear wheel. (☛ p. 75)
- Take the motorcycle off of the rear wheel stand. (☛ p. 10)

## 13.1 Removing the battery

**Warning**

**Risk of injury** Battery acid and battery gases cause serious chemical burns.

- Keep batteries out of the reach of children.
- Wear suitable protective clothing and goggles.
- Avoid contact with battery acid and battery gases.
- Keep sparks and open flames away from the battery. Only charge in well-ventilated rooms.
- In the event of skin contact, rinse with large amounts of water. If battery acid gets in the eyes, rinse with water for at least 15 minutes and contact a physician.

**Preparatory work**

- Switch off all power consumers and switch off the engine.
- Remove the seat. (☛ p. 61)

**Main work**

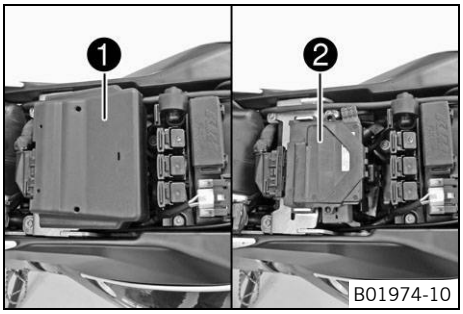


- Remove battery cover ❶.
- Pull the EFI control unit ❷ off of the holder and set it to one side.

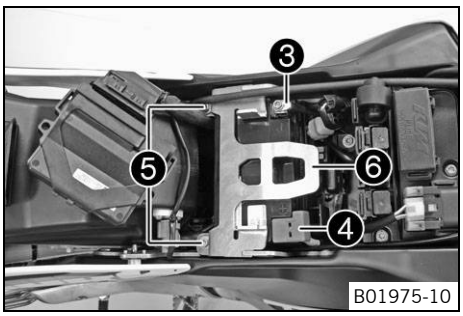


- Disconnect negative cable ❸ of the battery.
- Take off the positive terminal cover ❹ and disconnect the positive cable from the battery.
- Remove screws ❺.
- Pull retaining bracket ❻ of the battery forward and remove it.
- Lift the battery up and out.

**Info**

Never operate the motorcycle with a discharged battery or without a battery. In both cases, electrical components and safety devices can be damaged. The vehicle is therefore no longer roadworthy.

## 13.2 Installing the battery

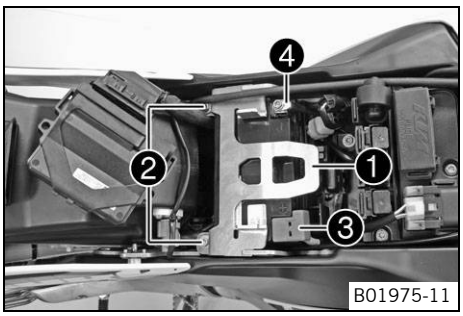


**Main work**

- Insert the battery into the battery compartment with the terminals facing rearward.

| |
|---|
| Battery (YTZ10S) (☛ p. 194) |

- Position retaining bracket ❶ and mount and tighten screws ❷.

  Guideline

| | | |
|---|---|---|
| Remaining screws, chassis | M6 | 10 Nm (7.4 lbf ft) |

- Position the positive cable and mount and tighten the screw.

  Guideline

| | | |
|---|---|---|
| Remaining screws, chassis | M6 | 10 Nm (7.4 lbf ft) |

- Position positive terminal cover ❸.
- Position negative cable ❹ and mount and tighten the screw.

  Guideline

| | | |
|---|---|---|
| Remaining screws, chassis | M6 | 10 Nm (7.4 lbf ft) |

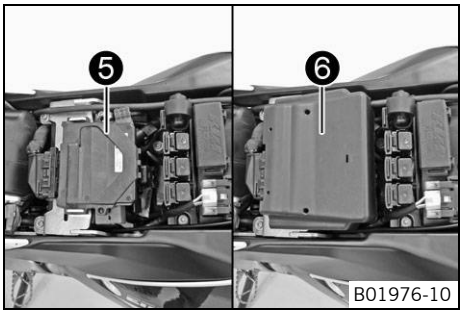


– Position EFI control unit ❺.
– Mount battery cover ❻.

**Finishing work**
– Mount the seat. (☛ p. 62)
– Set the clock. (☛ p. 99)

## 13.3 Disconnecting the battery

**Preparatory work**
– Switch off all power consumers and switch off the engine.
– Remove the seat. (☛ p. 61)

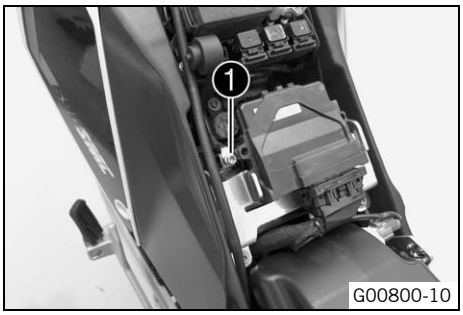


**Main work**
– Disconnect the negative (minus) cable ❶ of the battery.

**Info**
Never operate the motorcycle with a discharged battery or without a battery. In both cases, electrical components can safety equipment can be damaged. The vehicle is therefore no longer roadworthy.

## 13.4 Connecting the battery

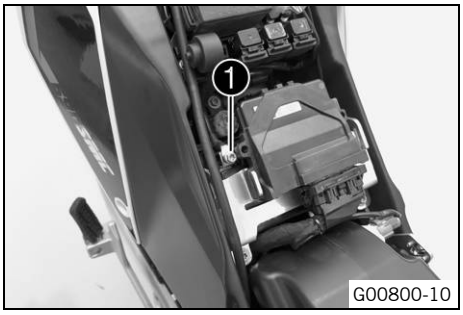


**Main work**
– Reconnect minus cable ❶.

**Finishing work**
– Mount the seat. (☛ p. 62)
– Set the clock. (☛ p. 99)

## 13.5 Recharging the battery

**Warning**
**Risk of injury** Battery acid and battery gases cause serious chemical burns.

– Keep batteries out of the reach of children.
– Wear suitable protective clothing and goggles.
– Avoid contact with battery acid and battery gases.
– Keep sparks and open flames away from the battery. Only charge in well-ventilated rooms.
– In the event of skin contact, rinse with large amounts of water. If battery acid gets in the eyes, rinse with water for at least 15 minutes and contact a physician.

**Warning**
**Environmental hazard** The battery contains elements that are harmful to the environment.

– Do not discard batteries with the household waste. Dispose of faulty batteries in an environmentally compatible manner. Give the battery to your authorized KTM dealer or dispose of it at a collection point for used batteries.

**Warning**

**Environmental hazard** Hazardous substances cause environmental damage.

– Oil, grease, filters, fuel, cleaners, brake fluid, etc., should be disposed of as stipulated in applicable regulations.

**Info**

Even when there is no load on the battery, it still loses power steadily.
The charging level and the method of charging are very important for the service life of the battery.
Rapid recharging with a high charging current shortens the battery's service life.
If the charging current, charging voltage and charging time are exceeded, electrolyte escapes through the safety valves. This reduces the battery capacity.
If the battery is depleted from starting the vehicle repeatedly, the battery must be charged immediately.
If the battery is left in a discharged state for an extended period, it will become over-discharged and sulfate, destroying the battery.
The battery is maintenance-free, which means that the acid level does not need to be checked.

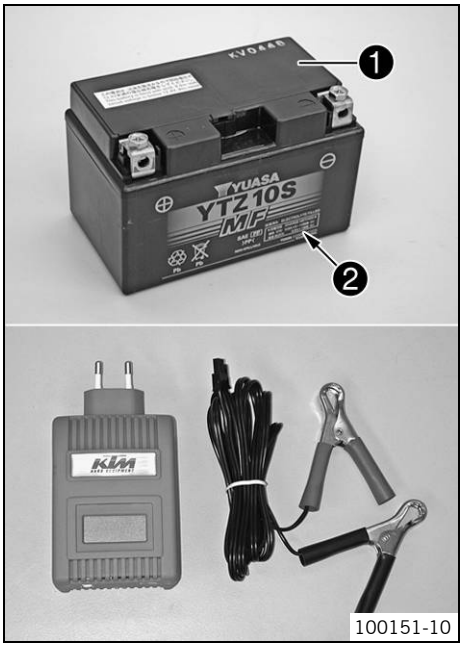

100151-10

**Preparatory work**

– Switch off all power consumers and switch off the engine.
– Remove the seat. (☛ p. 61)
– Remove the battery. (☛ p. 82)

**Main work**

– Connect the battery charger to the battery. Switch on the battery charger.

| |
|---|
| Battery charger (58429074000) |

You can also use the battery charger to test rest potential and start potential of the battery, and to test the alternator. With this device, you cannot overcharge the battery.

**Info**

Never remove lid ❶.
Charge the battery with a maximum of 10% of the capacity specified on the battery housing ❷.

– Switch off and disconnect the charger after charging.

Guideline

| The charge current, charge voltage and charge time must not be exceeded. | |
|---|---|
| Charge the battery regularly when the motorcycle is not in use | 3 months |

**Finishing work**

– Install the battery. (☛ p. 82)
– Mount the seat. (☛ p. 62)
– Set the clock. (☛ p. 99)

## 13.6 Checking the charging voltage

**Condition**

The battery must be fully functional and completely charged.

**Preparatory work**

– Remove the seat. (☛ p. 61)

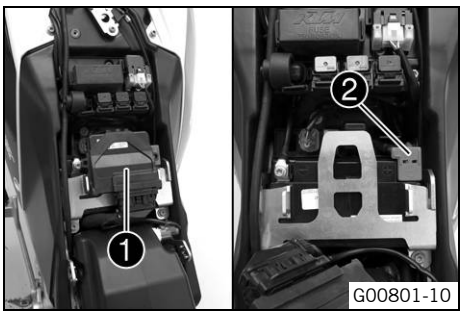
G00801-10

**Main work**

– Remove the battery cover.
– Pull the EFI control unit ❶ off of the holder and set it to one side.
– Take off terminal cover ❷.
– Start the motorcycle to make checks. (☛ p. 13)

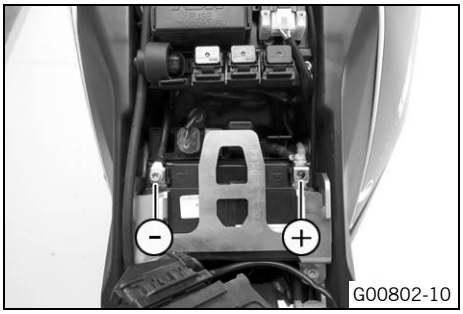


– V Measure the voltage between the specified points.
Measuring point **Plus (+)** – Measuring point **Ground (–)**

| Charging voltage | |
|---|---|
| 5,000 rpm | 13.5... 15.0 V |

» If the displayed value is less than the specified value:
  – Check the plug-in connections from the alternator to the voltage regulator.
  – Check the plug-in connections from the voltage regulator to the wiring harness.
  – Check the stator winding of the alternator. (☛ p. 187)
» If the displayed value is greater than the specified value:
  – Change the voltage regulator.

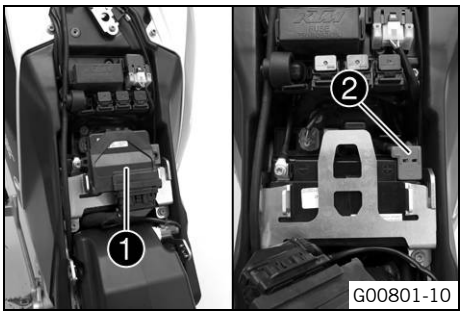


– Position terminal cover ❷.
– Mount EFI control unit ❶.
– Mount the battery cover.

**Finishing work**
– Mount the seat. (☛ p. 62)

## 13.7 Checking the quiescent current

**Preparatory work**
– Remove the seat. (☛ p. 61)

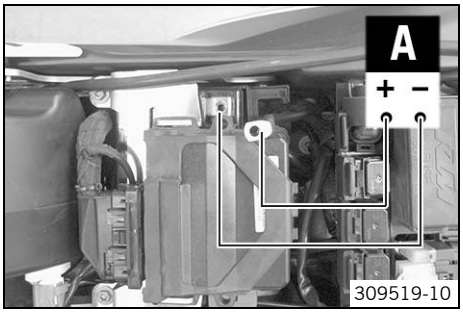


**Main work**
– Remove the battery cover.
– Disconnect the negative (minus) cable of the battery.
– Measure the current between battery ground (–) and the negative cable.

**Info**
The value of the open-circuit current only applies to vehicles in the original state, without additional power consumers.

| Maximum open-circuit current | < 1.0 mA |
|---|---|

» If the measured value is greater than the specified value:
  – Disconnect the voltage regulator from the wiring harness and take the measurement again.
– Mount the battery cover.

**Finishing work**
– Mount the seat. (☛ p. 62)

## 13.8 Changing the main fuse

**Warning**
**Fire hazard** The electrical system can be overloaded if the wrong fuses are used.
– Use only fuses with the prescribed amperage. Never by-pass or repair fuses.

**Info**
The main fuse protects all power consumers in the vehicle. It is in the housing of the starter relay next to the battery.

**Preparatory work**
– Switch off all power consumers and switch off the engine.
– Remove the seat. (☛ p. 61)

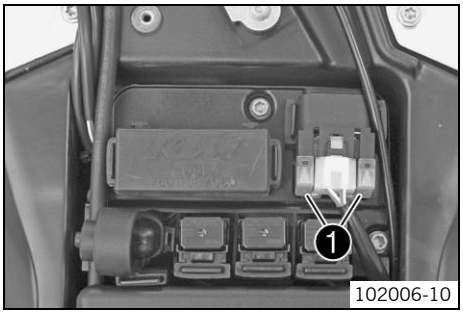


**Main work**

– Remove protection covers ❶.

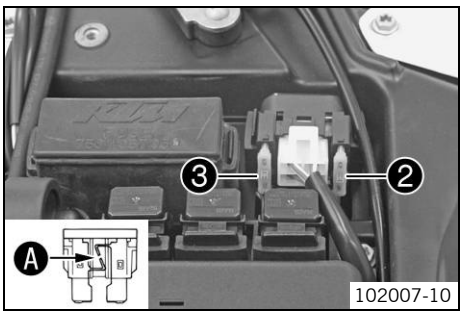


– Remove a defective main fuse ❷ with needle nose pliers.

> **Info**
> A defective fuse is indicated by a burned-out fuse wire Ⓐ.
> A reserve fuse ❸ is located in the starter relay.

– Install a new main fuse.

| Fuse (58011109130) (☛ p. 194) |
|---|

> **Info**
> Insert a new replacement fuse into the starter relay to have it available when needed.

– Check the functioning of the electrical equipment.
– Mount the protection covers.

**Finishing work**

– Mount the seat. (☛ p. 62)
– Set the clock. (☛ p. 99)

## 13.9 Changing fuses of individual power consumers

> **Info**
> The fuse box containing the fuses of individual power consumers is located under the seat.

**Preparatory work**

– Switch off all power consumers and switch off the engine.
– Remove the seat. (☛ p. 61)

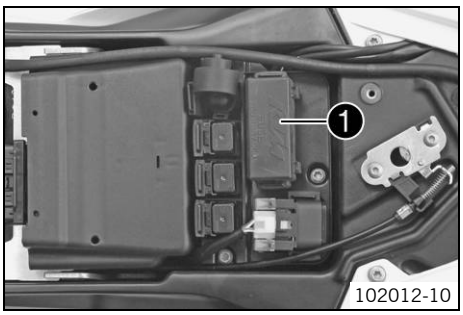


**Main work**

– Open fuse box cover ❶.

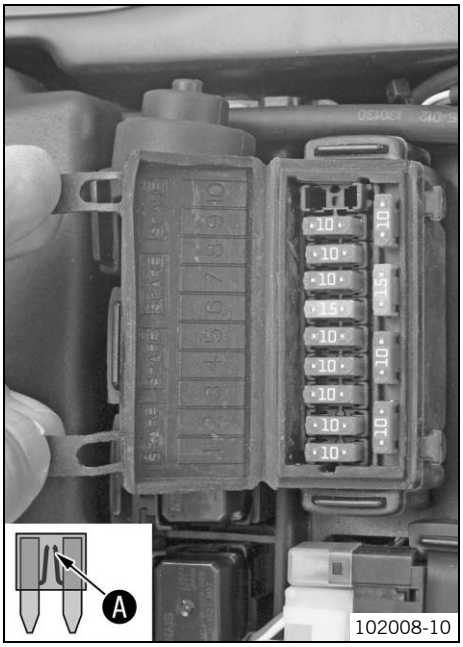


– Remove the defective fuse.

Guideline

| |
|---|
| Fuse **1** - 10 A - ignition, combination instrument, clock, EFI control unit |
| Fuse **2** - 10 A - ignition, combination instrument, EFI control unit |
| Fuse **3** - 10 A - fuel pump |
| Fuse **4** - 10 A - radiator fan |
| Fuse **5** - 10 A - horn, brake light, turn signal |
| Fuse **6** - 15 A - high beam, low beam, parking light, tail light, license plate lamp |
| Fuse **7** - 10 A - for auxiliary equipment (permanent positive) |
| Fuse **8** - 10 A - for supplementary equipment (accessories connected with ignition switch) |
| Fuse **9** - 10 A - ABS |
| Fuse **10** - not used |
| Fuse **SPARE** - 10 A/15 A - spare fuses |

**Info**

A defective fuse is indicated by a burned-out fuse wire A.

**Warning**

**Fire hazard** The electrical system can be overloaded if the wrong fuses are used.

– Use only fuses with the prescribed amperage. Never by-pass or repair fuses.

– Replace with a spare fuse of the right rating.

| |
|---|
| Fuse (75011088010) (☛ p. 194) |
| Fuse (75011088015) (☛ p. 194) |

**Tip**

Put a new spare fuse in the fuse box for future use if needed.

– Check the function of power consumers.
– Close the fuse box cover.

**Finishing work**

– Mount the seat. (☛ p. 62)

## 13.10 Adjusting the engine characteristic

**Preparatory work**

– Switch off the ignition by turning the ignition key to position **OFF** ⊗.
– Remove the seat. (☛ p. 61)

**Main work**

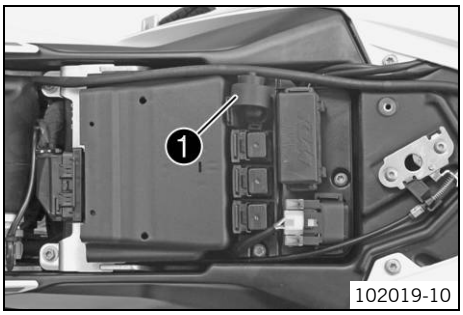


– Pull the **Map-Select** switch and holder 1 upward off of the retaining bracket.
– Pull the **Map-Select** switch out of the holder.

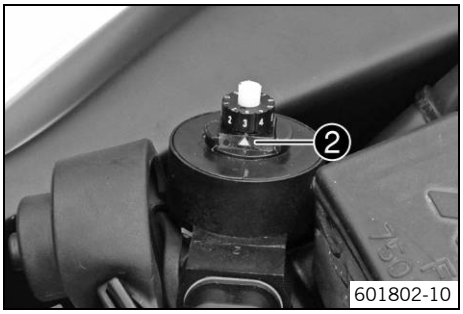


– Turn the adjusting wheel until the desired digit is next to marking ❷.

**Set the Map-Select switch to Soft.**

– Set the adjusting wheel to position **1**.

✔ Soft – reduced homologated peak performance for better driveability.

**Set the Map-Select switch to Advanced.**

– Set the adjusting wheel to position **2**.

✔ Advanced – homologated performance with extremely direct responsiveness.

**Set the Map-Select switch to Standard.**

– Set the adjusting wheel to position **3**, **4**, **5**, **6**, **7**, **8** or **9**.

✔ Standard – homologated performance with balanced responsiveness.

**Set the Map-Select switch to poor fuel quality.**

– Set the adjusting wheel to position **0**.

✔ Poor fuel quality – homologated performance is reduced in accordance with the fuel quality, use for no more than 1 tank of fuel

– Position the **Map-Select** switch in the holder.

– Slide the **Map-Select** switch with the holder downward onto the retaining bracket.

**Finishing work**

– Mount the seat. (☛ p. 62)

## 14.1 Checking the front brake linings

**Warning**
**Danger of accidents** Reduced braking efficiency caused by worn brake linings.

– Change worn brake linings immediately.

**Note**
**Danger of accidents** Reduced braking efficiency caused by damaged brake discs.

– If the brake linings are not changed in time, the steel brake lining carriers grind on the brake disc. The braking effect is greatly reduced and the brake discs are destroyed. Check the brake linings regularly.

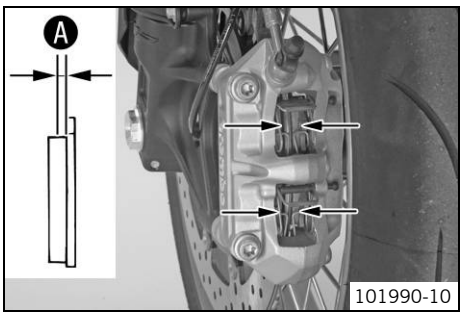


– Check the brake linings for minimum thickness A.

| | |
|---|---|
| Minimum thickness A | ≥ 1 mm (≥ 0.04 in) |

» If the minimum thickness is less than specified:
  – Change the brake linings of the front brake. (☛ p. 89)
– Check the brake linings for damage and cracking.
» If there is wear or tearing:
  – Change the brake linings of the front brake. (☛ p. 89)

## 14.2 Changing the brake linings of the front brake

**Warning**
**Danger of accident** Brake system failure.

– Maintenance work and repairs must be carried out professionally.

**Warning**
**Skin irritation** Brake fluid can cause skin irritation on contact.

– Avoid contact with skin and eyes, and keep out of the reach of children.
– Wear suitable protective clothing and goggles.
– If brake fluid comes into contact with the eyes, flush the eyes thoroughly with water and consult a physician immediately.

**Warning**
**Danger of accidents** Reduced braking efficiency due to old brake fluid.

– Change the brake fluid of the front and rear brake according to the service schedule.

**Warning**
**Danger of accidents** Reduced braking efficiency due to oil or grease on the brake discs.

– Always keep the brake discs free of oil and grease, and clean them with brake cleaner when necessary.

**Warning**
**Danger of accidents** Reduced braking efficiency due to use of non-approved brake linings.

– Brake linings available from accessory suppliers are often not tested and approved for use on KTM vehicles. The construction and friction factor of the brake linings and therefore the brake power can differ considerably from the original KTM brake linings. If brake linings are used that differ from the originals, there is no guarantee that they comply with the original license. The vehicle no longer corresponds to the condition at delivery, and the warranty is no longer valid.

**Warning**
**Environmental hazard** Hazardous substances cause environmental damage.

– Oil, grease, filters, fuel, cleaners, brake fluid, etc., should be disposed of as stipulated in applicable regulations.

**Info**
Never use DOT 5 brake fluid! It is silicone-based and purple in color. Oil seals and brake lines are not designed for DOT 5 brake fluid.
Avoid contact between brake fluid and painted parts. Brake fluid attacks paint!
Use only clean brake fluid from a sealed container.

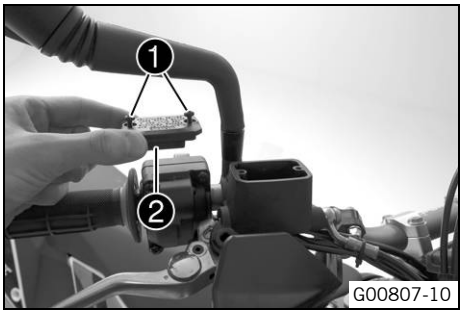


- Move the brake fluid reservoir mounted on the handlebar to a horizontal position.
- Remove screws ❶.
- Remove cover with membrane ❷.
- Press the brake piston back to its basic position and make sure that no brake fluid overflows from the brake fluid reservoir.

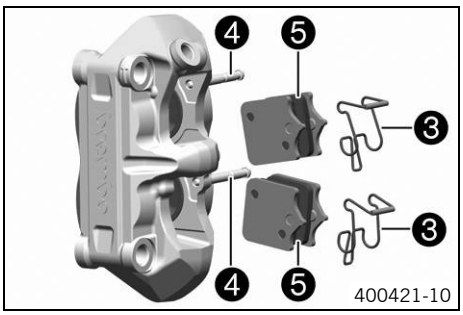


- Push the spring hanger forward from spring ❸ and pull out pin ❹.
- Remove springs ❸. Remove brake linings ❺.
- Clean the brake caliper.
- Insert new brake linings ❺. Position springs ❸ and mount pins ❹.

**Info**
The spring hanger of springs ❸ must be positioned upward.

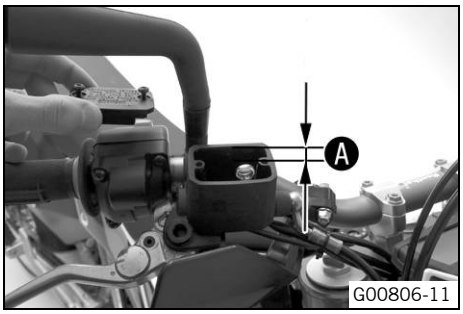


- Add brake fluid to level Ⓐ.

Guideline

| | |
|---|---|
| Level Ⓐ | 5 mm (0.2 in) |

| |
|---|
| Brake fluid DOT 4 / DOT 5.1 (☛ p. 224) |

- Position the cover with the membrane. Mount and tighten the screws.

**Info**
Clean up overflowed or spilt brake fluid immediately with water.

## 14.3 Adjusting the basic position of the hand brake lever

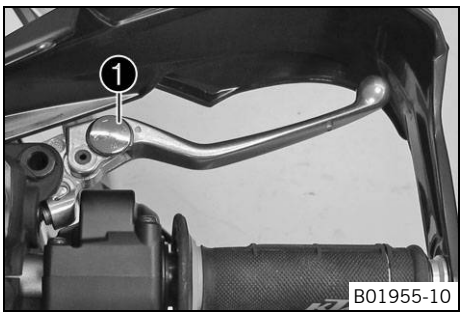


- Adjust the basic setting of the hand brake lever to your hand size by turning adjusting wheel ❶.

**Info**
Pull the hand brake lever forward and turn the adjusting wheel.
Do not make any adjustments while riding!

## 14.4 Checking brake fluid level of front brake

**Warning**
**Danger of accidents** Failure of the brake system.

- If the brake fluid level falls below the **MIN** mark, this indicates a leakage in the brake system or worn-out brake linings. Check the brake system and do not continue riding.

**Warning**
**Danger of accidents** Reduced braking efficiency due to old brake fluid.

- Change the brake fluid of the front and rear brake according to the service schedule.

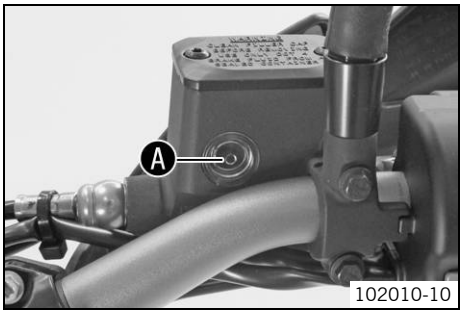


– Move the brake fluid reservoir mounted on the handlebar to a horizontal position.
– Check the brake fluid level in the viewer.
  » If the brake fluid has dropped below marking A:
    – Add front brake fluid. (☛ p. 91)

## 14.5 Adding front brake fluid

**Warning**
**Danger of accidents** Failure of the brake system.

– If the brake fluid level falls below the **MIN** mark, this indicates a leakage in the brake system or worn-out brake linings. Check the brake system and do not continue riding.

**Warning**
**Skin irritation** Brake fluid can cause skin irritation on contact.

– Avoid contact with skin and eyes, and keep out of the reach of children.
– Wear suitable protective clothing and goggles.
– If brake fluid comes into contact with the eyes, flush the eyes thoroughly with water and consult a physician immediately.

**Warning**
**Danger of accidents** Reduced braking efficiency due to old brake fluid.

– Change the brake fluid of the front and rear brake according to the service schedule.

**Warning**
**Environmental hazard** Hazardous substances cause environmental damage.

– Oil, grease, filters, fuel, cleaners, brake fluid, etc., should be disposed of as stipulated in applicable regulations.

**Info**
Never use DOT 5 brake fluid! It is silicone-based and purple in color. Oil seals and brake lines are not designed for DOT 5 brake fluid.
Avoid contact between brake fluid and painted parts. Brake fluid attacks paint!
Use only clean brake fluid from a sealed container.

**Preparatory work**
– Check the front brake linings. (☛ p. 89)

**Main work**
– Move the brake fluid reservoir mounted on the handlebar to a horizontal position.
– Remove screws 1.
– Remove cover 2 with membrane 3.
– Add brake fluid to level A.

Guideline

| | |
|---|---|
| Measurement of A | 5 mm (0.2 in) |

| |
|---|
| Brake fluid DOT 4 / DOT 5.1 (☛ p. 224) |

– Position the cover with the membrane. Mount and tighten the screws.

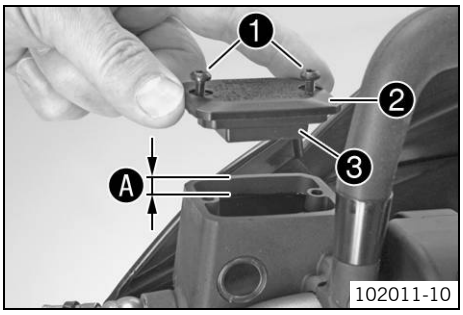


**Info**
Clean up overflowed or spilt brake fluid immediately with water.

## 14.6 Changing the front brake fluid

**Warning**
**Skin irritation** Brake fluid can cause skin irritation on contact.

- Avoid contact with skin and eyes, and keep out of the reach of children.
- Wear suitable protective clothing and goggles.
- If brake fluid comes into contact with the eyes, flush the eyes thoroughly with water and consult a physician immediately.

**Warning**
**Environmental hazard** Hazardous substances cause environmental damage.

- Oil, grease, filters, fuel, cleaners, brake fluid, etc., should be disposed of as stipulated in applicable regulations.

**Info**
Avoid contact between brake fluid and painted parts. Brake fluid attacks paint!
Use only clean brake fluid from a sealed container.

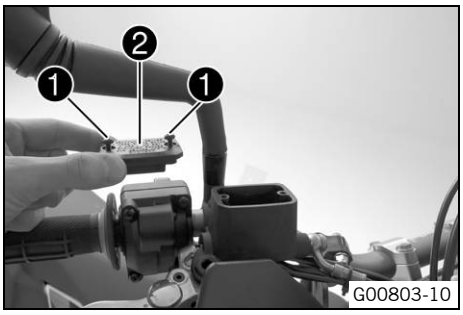


- Move the brake fluid reservoir mounted on the handlebar to a horizontal position.
- Cover the painted parts.
- Remove screws ❶.
- Remove cover ❷ with membrane.
- Draw the old brake fluid out of the brake fluid reservoir using a syringe and fill with fresh brake fluid.

| |
|---|
| Bleed syringe (50329050000) (☛ p. 229) |
| Brake fluid DOT 4 / DOT 5.1 (☛ p. 224) |

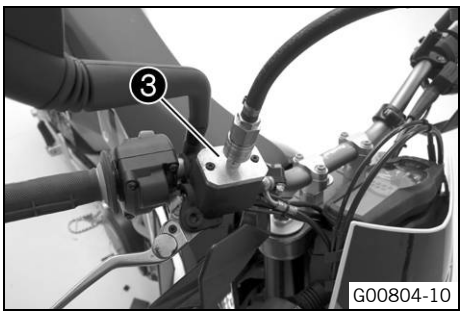


- Mount bleeder cover ❸.

| |
|---|
| Bleeder cover (00029013010) (☛ p. 228) |

- Connect the bleeding device.

| |
|---|
| Bleeding device (00029013100) (☛ p. 228) |

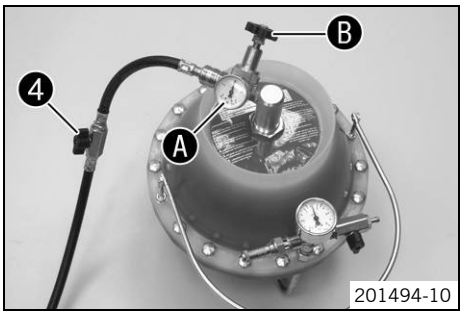


- Open shut-off valve ❹.

**Info**
Follow the operating instructions of the bleeding device.

- Ensure that the inflation pressure is correctly set at pressure gauge Ⓐ. If necessary, adjust the inflation pressure at pressure regulator Ⓑ.

Guideline

| | |
|---|---|
| Inflation pressure | 2… 2.5 bar (29… 36 psi) |

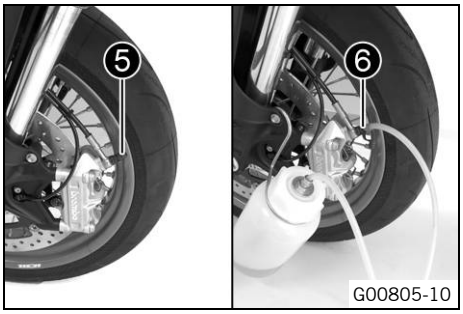


- Pull off protection cap ❺ of the brake caliper bleeder screw. Connect the hose of the bleeder bottle.

| |
|---|
| Bleeding device (00029013100) (☛ p. 228) |

- Open bleeder screw ❻ by approx. one half turn.

**Info**
Bleed until fresh brake fluid emerges from the bleeder bottle hose without bubbles.

- Tighten the bleeder screw.
- Close shut-off valve ❹.

– Open the bleeder screw again until brake fluid stops emerging.

**Info**
This prevents overfilling of the brake fluid reservoir.

– Tighten the bleeder screw. Remove the hose of the bleeder bottle. Mount the protection cap.
– Disconnect the bleeding device. Remove the bleeder cover.
– Correct the brake fluid level.

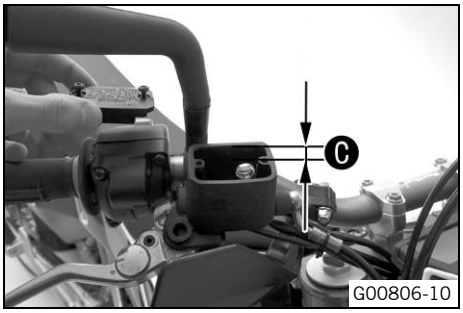


Guideline

| | |
|---|---|
| Add brake fluid to level C. | 5 mm (0.2 in) |

| |
|---|
| Brake fluid DOT 4 / DOT 5.1 (☛ p. 224) |

– Position the cover with the membrane. Mount and tighten the screws.

**Info**
Clean up overflowed or spilt brake fluid immediately with water.

– Check the hand brake lever for a firm pressure point.

## 14.7 Checking the rear brake linings

**Warning**
**Danger of accidents** Reduced braking efficiency caused by worn brake linings.

– Change worn brake linings immediately.

**Note**
**Danger of accidents** Reduced braking efficiency caused by damaged brake discs.

– If the brake linings are not changed in time, the steel brake lining carriers grind on the brake disc. The braking effect is greatly reduced and the brake discs are destroyed. Check the brake linings regularly.

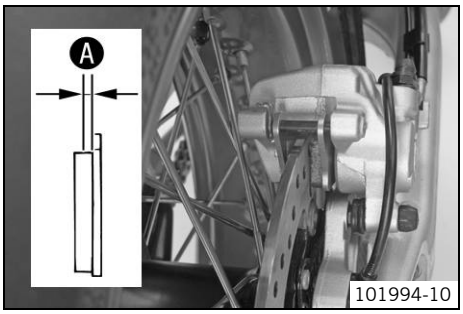


– Check the brake linings for minimum thickness A.

| | |
|---|---|
| Minimum thickness A | ≥ 1 mm (≥ 0.04 in) |

» If the minimum thickness is less than specified:
  – Change the rear brake linings. (☛ p. 93)
– Check the brake linings for damage and cracking.
» If there is wear or tearing:
  – Change the rear brake linings. (☛ p. 93)

## 14.8 Changing the rear brake linings

**Warning**
**Danger of accident** Brake system failure.

– Maintenance work and repairs must be carried out professionally.

**Warning**
**Skin irritation** Brake fluid can cause skin irritation on contact.

– Avoid contact with skin and eyes, and keep out of the reach of children.
– Wear suitable protective clothing and goggles.
– If brake fluid comes into contact with the eyes, flush the eyes thoroughly with water and consult a physician immediately.

**Warning**
**Danger of accidents** Reduced braking efficiency due to old brake fluid.

– Change the brake fluid of the front and rear brake according to the service schedule.

**Warning**
**Danger of accidents** Reduced braking efficiency due to oil or grease on the brake discs.

– Always keep the brake discs free of oil and grease, and clean them with brake cleaner when necessary.

**Warning**

**Danger of accidents** Reduced braking efficiency due to use of non-approved brake linings.

– Brake linings available from accessory suppliers are often not tested and approved for use on KTM vehicles. The construction and friction factor of the brake linings and therefore the brake power can differ considerably from the original KTM brake linings. If brake linings are used that differ from the originals, there is no guarantee that they comply with the original license. The vehicle no longer corresponds to the condition at delivery, and the warranty is no longer valid.

**Warning**

**Environmental hazard** Hazardous substances cause environmental damage.

– Oil, grease, filters, fuel, cleaners, brake fluid, etc., should be disposed of as stipulated in applicable regulations.

**Info**

Never use DOT 5 brake fluid! It is silicone-based and purple in color. Oil seals and brake lines are not designed for DOT 5 brake fluid.
Avoid contact between brake fluid and painted parts. Brake fluid attacks paint!
Use only clean brake fluid from a sealed container.

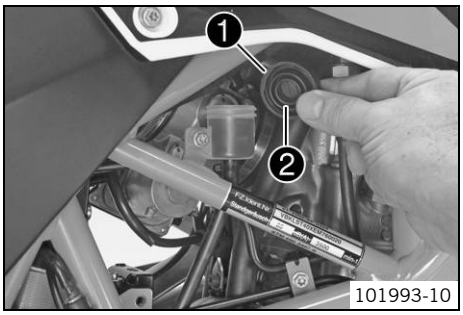

101993-10

– Stand the vehicle upright.
– Remove screw cap ❶ with membrane ❷.
– Press the brake caliper by hand onto the brake disc in order to retract the brake piston. Ensure that brake fluid does not flow out of the brake fluid reservoir, extracting it by suction if it does.

**Info**

Make sure when pushing back the brake piston that you do not press the brake caliper against the spokes.

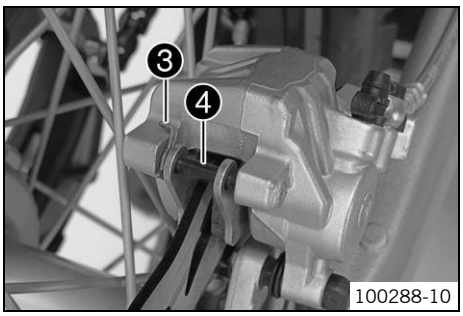

100288-10

– Remove cotter pin ❸, remove pin ❹ toward the left by striking it, and remove the brake linings.
– Clean brake caliper and brake caliper support.

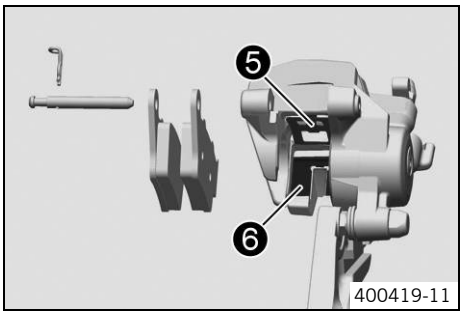

400419-11

– Check that leaf spring ❺ in the brake caliper and sliding plate ❻ in the brake caliper support are seated correctly.

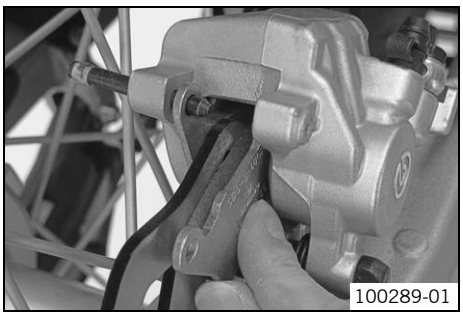
100289-01

– Insert the brake linings, insert the pin, and mount the cotter pin.
– Operate the foot brake lever repeatedly until the brake linings are in contact with the brake disc and there is a pressure point.
– Adjust the brake fluid level to the **MAX** mark.

| |
|---|
| Brake fluid DOT 4 / DOT 5.1 (☛ p. 224) |

– Mount the screw cap with the membrane.

**Info**

Clean up overflowed or spilt brake fluid immediately with water.

## 14.9 Checking the free travel of foot brake lever

**Warning**
**Danger of accidents** Brake system failure.

– If there is no free travel on the foot brake lever, pressure builds up on the rear brake circuit. The rear brake can fail due to overheating. Adjust the free travel on foot brake lever according to specifications.

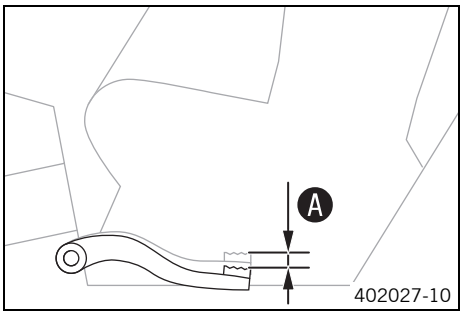


– Move the foot brake lever back and forth between the end stop and the contact to the foot brake cylinder piston and check free travel Ⓐ.

Guideline

| | |
|---|---|
| Free travel at foot brake lever | 3… 5 mm (0.12… 0.2 in) |

**Info**
You will know that contact has been made with the foot brake cylinder piston when there is increased resistance when you activate the foot brake lever.

» If the free travel does not meet specifications:
  – Adjust the basic position of the foot brake lever. (☛ p. 95)

## 14.10 Adjusting the basic position of the foot brake lever

**Warning**
**Danger of accidents** Brake system failure.

– If there is no free travel on the foot brake lever, pressure builds up on the rear brake circuit. The rear brake can fail due to overheating. Adjust the free travel on foot brake lever according to specifications.

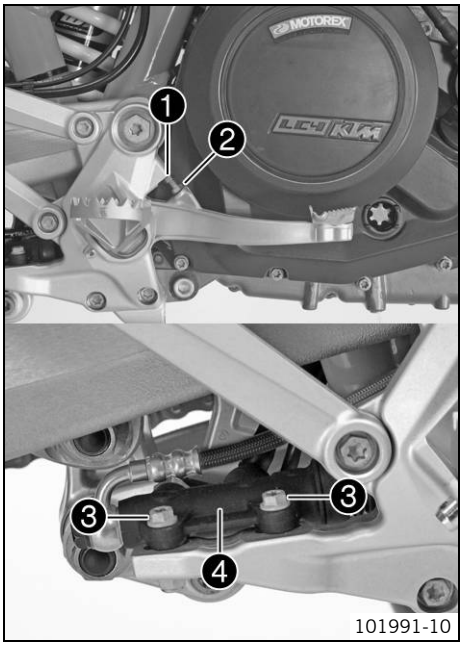


– Loosen fitting ❸ on foot brake cylinder ❹.
– To adjust the basic position of the foot brake lever individually, loosen nut ❶ and turn screw ❷ accordingly.

**Info**
The range of adjustment is limited. The screw must be screwed into the footrest bracket by at least four turns.

– Position foot brake cylinder ❹ so that the foot brake lever has the necessary free travel. Hold screws ❸ in place and tighten the nuts.

Guideline

| | | |
|---|---|---|
| Screw connection, foot brake cylinder | M6 | 10 Nm (7.4 lbf ft) |

– Check the free travel of the foot brake lever. (☛ p. 95)
– Tighten nut ❶.

## 14.11 Checking rear brake fluid level

**Warning**
**Danger of accidents** Failure of the brake system.

– If the brake fluid level falls below the **MIN** mark, this indicates a leakage in the brake system or worn-out brake linings. Check the brake system and do not continue riding.

**Warning**
**Danger of accidents** Reduced braking efficiency due to old brake fluid.

– Change the brake fluid of the front and rear brake according to the service schedule.

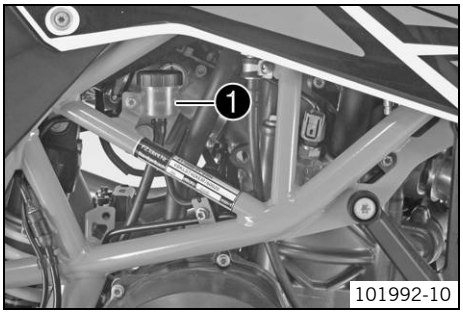


– Stand the vehicle upright.
– Check the brake fluid level in the brake fluid reservoir.
  » If the fluid level reaches the **MIN** marking ❶:
    – Add rear brake fluid. (☛ p. 96)

## 14.12 Adding rear brake fluid

**Warning**
**Danger of accidents** Failure of the brake system.

– If the brake fluid level falls below the **MIN** mark, this indicates a leakage in the brake system or worn-out brake linings. Check the brake system and do not continue riding.

**Warning**
**Skin irritation** Brake fluid can cause skin irritation on contact.

– Avoid contact with skin and eyes, and keep out of the reach of children.
– Wear suitable protective clothing and goggles.
– If brake fluid comes into contact with the eyes, flush the eyes thoroughly with water and consult a physician immediately.

**Warning**
**Danger of accidents** Reduced braking efficiency due to old brake fluid.

– Change the brake fluid of the front and rear brake according to the service schedule.

**Warning**
**Environmental hazard** Hazardous substances cause environmental damage.

– Oil, grease, filters, fuel, cleaners, brake fluid, etc., should be disposed of as stipulated in applicable regulations.

**Info**
Never use DOT 5 brake fluid! It is silicone-based and purple in color. Oil seals and brake lines are not designed for DOT 5 brake fluid.
Avoid contact between brake fluid and painted parts. Brake fluid attacks paint!
Use only clean brake fluid from a sealed container.

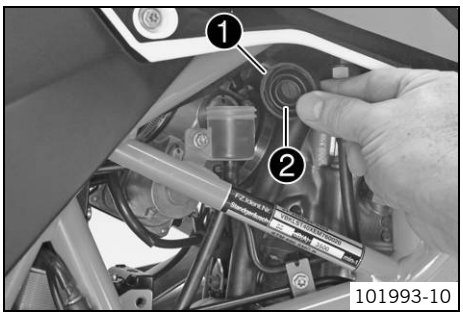


**Preparatory work**
– Check the rear brake linings. (☛ p. 93)

**Main work**
– Stand the vehicle upright.
– Remove screw cap ❶ with the washer and membrane ❷.
– Add brake fluid to the **MAX** mark.

| Brake fluid DOT 4 / DOT 5.1 (☛ p. 224) |
|---|

– Mount the screw cap with the washer and membrane.

**Info**
Clean up overflowed or spilt brake fluid immediately with water.

## 14.13 Changing the rear brake fluid

**Warning**
**Skin irritation** Brake fluid can cause skin irritation on contact.

- Avoid contact with skin and eyes, and keep out of the reach of children.
- Wear suitable protective clothing and goggles.
- If brake fluid comes into contact with the eyes, flush the eyes thoroughly with water and consult a physician immediately.

**Warning**
**Environmental hazard** Hazardous substances cause environmental damage.

- Oil, grease, filters, fuel, cleaners, brake fluid, etc., should be disposed of as stipulated in applicable regulations.

**Info**
Avoid contact between brake fluid and painted parts. Brake fluid attacks paint!
Use only clean brake fluid from a sealed container.

- Cover the painted parts.
- Take off screw cap ❶ with the washer and membrane.
- Draw the old brake fluid out of the brake fluid reservoir using a syringe and fill with fresh brake fluid.

| |
|---|
| Bleed syringe (50329050000) (☛ p. 229) |
| Brake fluid DOT 4 / DOT 5.1 (☛ p. 224) |

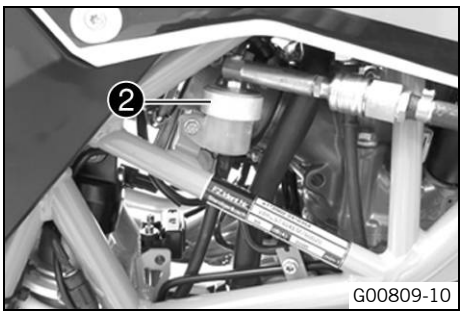


- Mount bleeder cover ❷.

| |
|---|
| Bleeder cover (00029013004) (☛ p. 228) |

- Connect the bleeding device.

| |
|---|
| Bleeding device (00029013100) (☛ p. 228) |

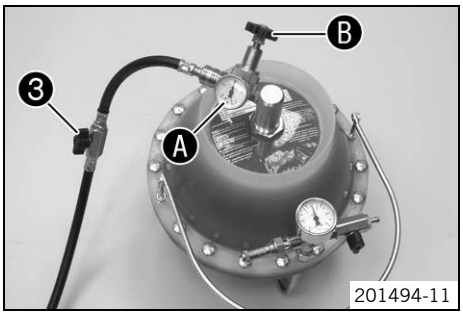


- Open shut-off valve ❸.

**Info**
Follow the operating instructions of the bleeding device.

- Ensure that the inflation pressure is correctly set at pressure gauge Ⓐ. If necessary, adjust the inflation pressure at pressure regulator Ⓑ.

Guideline

| | |
|---|---|
| Inflation pressure | 2… 2.5 bar (29… 36 psi) |

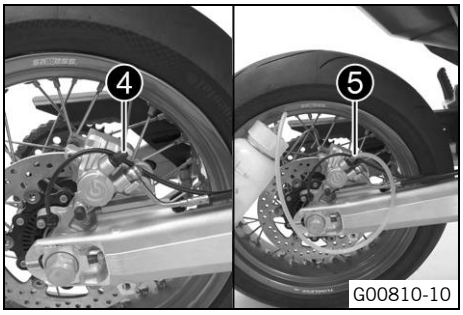


- Pull off protection cap ❹ of the bleeder screw. Connect the hose of the bleeder bottle.

| |
|---|
| Bleeding device (00029013100) (☛ p. 228) |

- Open bleeder screw ❺ by approx. one-half turn.

**Info**
Bleed until fresh brake fluid emerges from the bleeder bottle hose without bubbles.

- Tighten the bleeder screw.
- Close shut-off valve ❸.

– Open the bleeder screw again until brake fluid stops emerging.

**Info**
This prevents overfilling of the brake fluid reservoir.

– Tighten the bleeder screw. Remove the hose of the bleeder bottle. Mount the protection cap.
– Disconnect the bleeding device. Remove the bleeder cover.
– Add brake fluid to the **MAX** mark C.

Brake fluid DOT 4 / DOT 5.1 (☛ p. 224)

– Mount the screw cap with the washer and membrane.

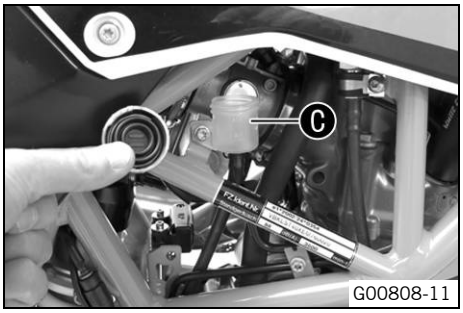

G00808-11

**Info**
Clean up overflowed or spilt brake fluid immediately with water.

## 15.1 Combination instrument

### 15.1.1 Setting kilometers or miles

**Info**
If you change the unit, the value **ODO** is retained and converted accordingly.
Making the setting according to the country.

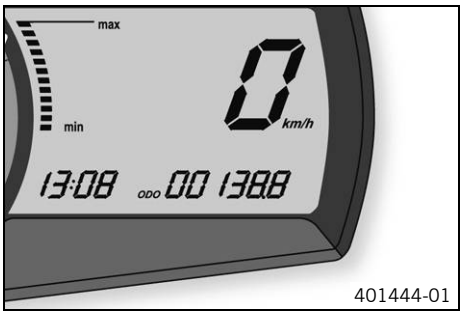

401444-01

**Condition**
The motorcycle is stationary.

- Switch on the ignition by turning the ignition key to position **ON** ○.
- Press the **MODE** button repeatedly until the **ODO** mode is active.
- Keep the **MODE** button pressed until the display mode changes from **km/h** to **mph** or from **mph** to **km/h**.

### 15.1.2 Setting the clock

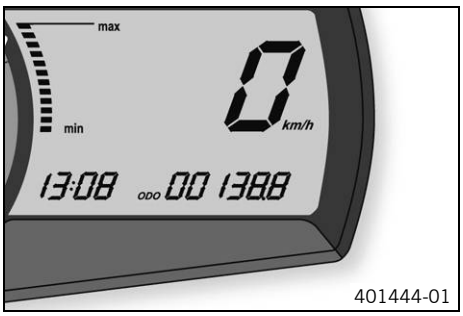

401444-01

**Condition**
The motorcycle is stationary.

- Switch on the ignition by turning the ignition key to position **ON** ○.
- Press the **MODE** button repeatedly until the **ODO** mode is active.
- Keep the **MODE** button and the **SET** button pressed simultaneously.
  ✔ The time display begins to flash.
- Press the **MODE** button to set the hour.
- Press the **SET** button to set the minute.
- Keep the **MODE** button and the **SET** button pressed simultaneously.
  ✔ The time is set.

### 15.1.3 Setting/resetting display TRIP 1

**Info**
The **TRIP 1** trip counter is always running and counts up to **999.9**.
The trip counter can be used to measure the distance covered during trips or between two refueling stops. After the value **999.9** is reached, the trip counter starts at **0.0** again.

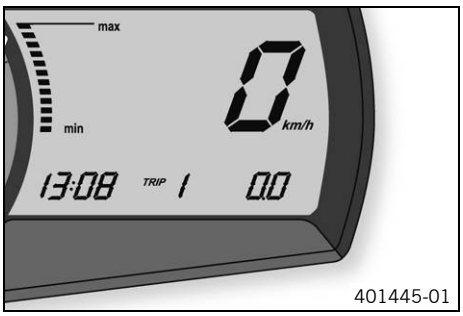

401445-01

- Switch on the ignition by turning the ignition key to position **ON** ○.
- Press the **MODE** button repeatedly until the **TRIP 1** mode is active.
- Keep the **SET** button pressed.
  ✔ The **TRIP 1** display is set to **0.0**.

### 15.1.4 Setting/resetting display TRIP 2

**Info**
The **TRIP 2** trip counter is always running and counts up to **999.9**.
The trip counter can be used to measure the distance covered during trips or between two refueling stops. After the value **999.9** is reached, the trip counter starts at **0.0** again.

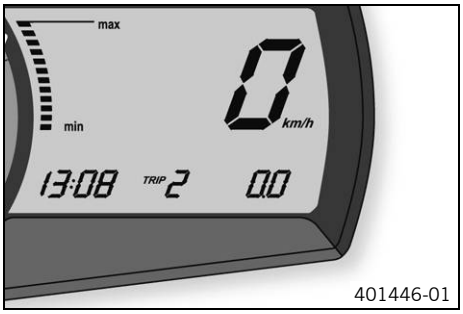

401446-01

- Switch on the ignition by turning the ignition key to position **ON** ○.
- Press the **MODE** button repeatedly until the **TRIP 2** mode is active.
- Keep the **SET** button pressed.
  - ✔ The **TRIP 2** display is set to **0.0**.

## 15.1.5 Setting the wheel circumference

**Danger**

**Voiding of the government approval for road use and the insurance coverage** The vehicle is only authorized for operation on public roads in the homologated version.

- If the vehicle is modified in any way, it may only be used on designated tracks away from public roads. Advise the vehicle owner and rider of this.
- If you undertake any modifications, please insist on receiving a signed workshop order from your customer in which you inform the customer in writing that these modifications are performed at the customer's own risk and that the vehicle will no longer be approved for use on public roads once modified.

**Condition**

The motorcycle is stationary.

**Preparatory work**

- Switch off all power consumers and switch off the engine.
- Remove the headlight mask with the headlight. (☛ p. 101)

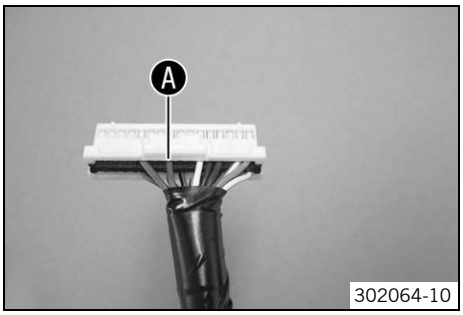

302064-10

**Main work**

- Unplug connector **ED** from the combination instrument.
- Unlock pin **18** Ⓐ and remove it from connector **ED**.
- Plug connector **ED** into the combination instrument.
- Switch on the ignition by turning the ignition key to position **ON** ○.
- Press the **MODE** button repeatedly until the **TRIP 1** display mode is active.
- Press and hold the **MODE** button for 10 seconds.
  - ✔ The wheel circumference is displayed in millimeters.

202058-10

**Increasing the wheel circumference**

- Press the **MODE** button ❶.

**Reducing the wheel circumference**

- Press the **SET** button ❷.

- Keep the **MODE** button and the **SET** button pressed simultaneously.
  - ✔ The settings are saved and the Setup menu is closed.
- Switch off the ignition by turning the ignition key to position **OFF** ⊗.
- Unplug connector **ED** from the combination instrument.
- Connect pin **18** to connector **ED**.
- Plug connector **ED** into the combination instrument.

**Finishing work**

- Install the headlight mask with the headlight. (☛ p. 102)
- Check the headlight setting. (☛ p. 101)

## 15.2 Checking the headlight setting

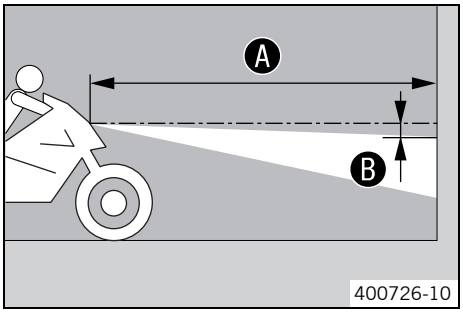


– Stand the vehicle upright on a horizontal surface in front of a light wall and make a mark at the height of the center of the low beam headlight.
– Make another mark at a distance B under the first mark.

Guideline

| | |
|---|---|
| Distance B | 5 cm (2 in) |

– Position the vehicle vertically at a distance A in front of the wall.

Guideline

| | |
|---|---|
| Distance A | 5 m (16 ft) |

– The rider, with luggage and a passenger if applicable, now sits down on the motorcycle.
– Switch on the low beam.
– Check the headlight setting.

For a ready-to-operate motorcycle with a rider, and with luggage and a passenger if applicable, the light-dark boundary must lie exactly on the lower mark.

» If the boundary between light and dark does not meet specifications:
  – Adjust the headlight range. (☛ p. 101)

## 15.3 Adjusting the headlight range

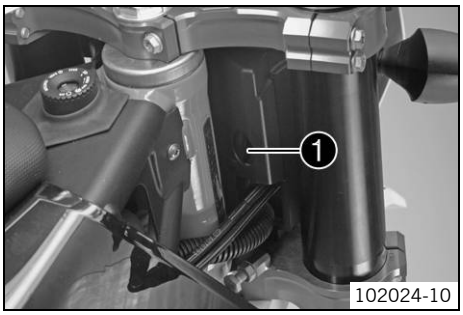


**Preparatory work**
– Check the headlight setting. (☛ p. 101)

**Main work**
– Turn adjusting screw 1 to adjust the headlight range.

Guideline

The boundary between light and dark must be exactly on the lower mark for a motorcycle with a rider (instructions on how to apply the mark: Checking the headlight setting).

**Info**
Turn clockwise to increase the headlight range; turn counterclockwise to reduce the headlight range.
If you have a heavy payload, you will need to correct the headlight range.

## 15.4 Removing the headlight mask with the headlight

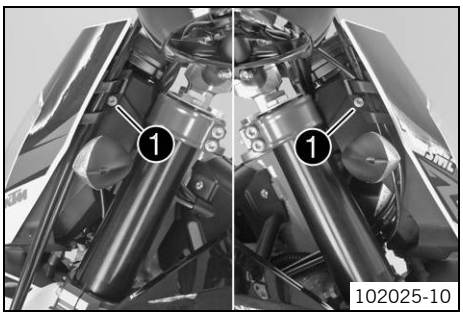


**Preparatory work**
– Switch off all power consumers and switch off the engine.

**Main work**
– Cover the fender with a cloth to protect it from damage.
– Remove screws 1 on both sides.
– Tip the headlight mask forward.

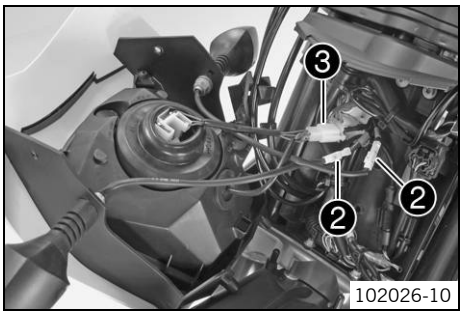


– Disconnect the connectors of turn signals 2 and headlight 3.
– Remove the headlight mask.

## 15.5 Installing the headlight mask with the headlight

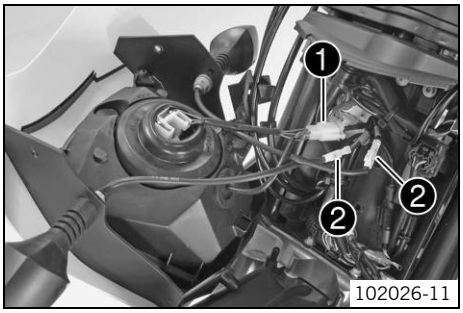


**Main work**

– Connect the connectors of headlight ❶ and turn signal lights ❷.
– Check lighting function.

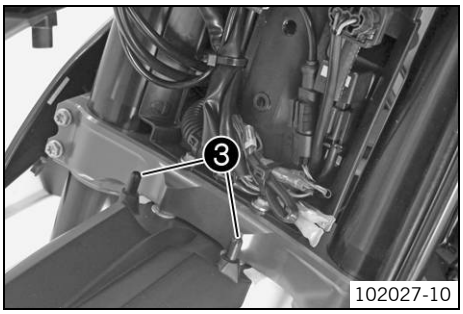


– Remove the cloth from the fender and position the headlight mask.
  ✔ Holding lugs ❸ reach into the headlight mask.

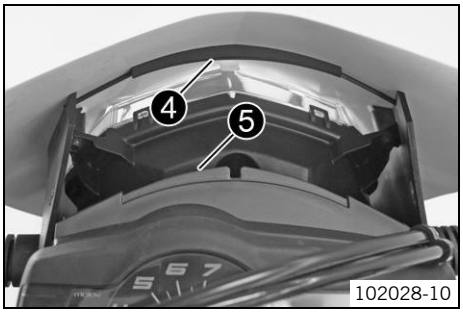


– Position groove ❹ on counterpiece ❺.

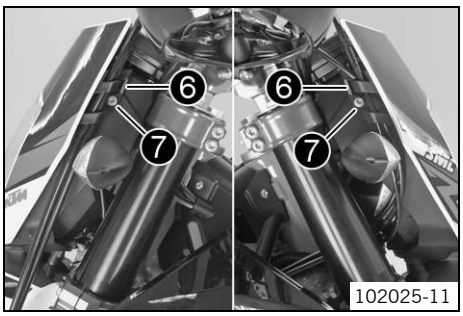


– Position brake line guides ❻. Mount and tighten screws ❼.
  Guideline

| | | |
|---|---|---|
| Screw, headlight mask | M5 | 5 Nm (3.7 lbf ft) |

**Finishing work**

– Check the headlight setting. (☛ p. 101)

## 15.6 Changing the parking light bulb

**Note**

**Damage to reflector** Reduced brightness.

– Grease on the lamp will evaporate due to the heat and be deposited on the reflector. Clean the lamp and keep it free of grease before mounting.

**Preparatory work**

– Switch off all power consumers and switch off the engine.
– Remove the headlight mask with the headlight. (☛ p. 101)

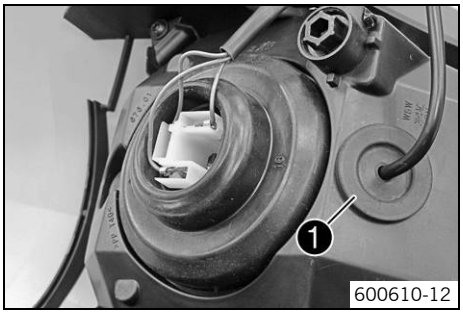


**Main work**

– Remove protection cap ❶.

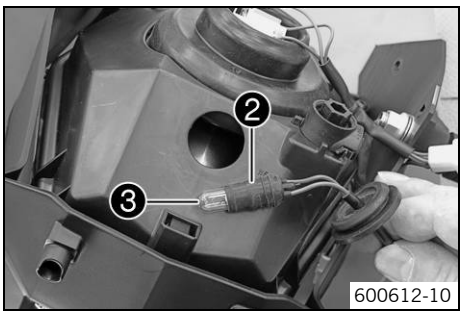


– Pull bulb socket ❷ out of the reflector.
– Pull parking light bulb ❸ out of the bulb socket.
– Insert a new parking light bulb in the bulb socket.

| Parking light (W5W / socket W2.1x9.5d) (☛ p. 194) |
|---|

– Insert the bulb socket in the reflector.
– Insert the protection cap.

**Finishing work**

– Install the headlight mask with the headlight. (☛ p. 102)
– Check the headlight setting. (☛ p. 101)

## 15.7 Changing the headlight bulb

**Note**

**Damage to reflector** Reduced brightness.

– Grease on the lamp will evaporate due to the heat and be deposited on the reflector. Clean the lamp and keep it free of grease before mounting.

**Preparatory work**

– Switch off all power consumers and switch off the engine.
– Remove the headlight mask with the headlight. (☛ p. 101)

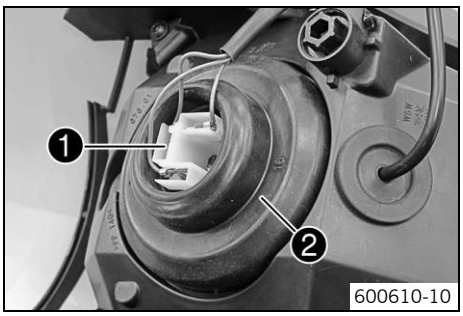


**Main work**

– Pull off connector ❶.
– Take off protection cap ❷ of the headlight bulb.

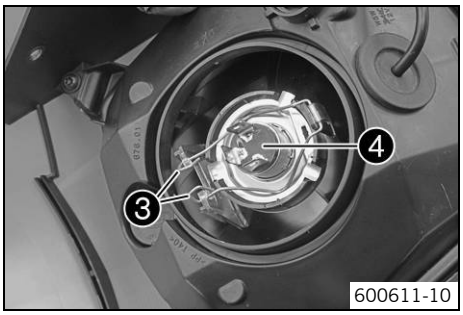


– Detach spring bar ❸.
– Remove headlight bulb ❹.
– Insert a new headlight bulb into the headlight housing.

| Headlight (H4 / socket P43t) (☛ p. 194) |
|---|

– Fix the headlight bulb in the headlight using the spring bar.
– Mount the protection cap. Attach the connector.

**Finishing work**

– Install the headlight mask with the headlight. (☛ p. 102)
– Check the headlight setting. (☛ p. 101)

## 15.8 Changing the turn signal bulb

**Note**

**Damage to reflector** Reduced brightness.

– Grease on the lamp will evaporate due to the heat and be deposited on the reflector. Clean the lamp and keep it free of grease before mounting.

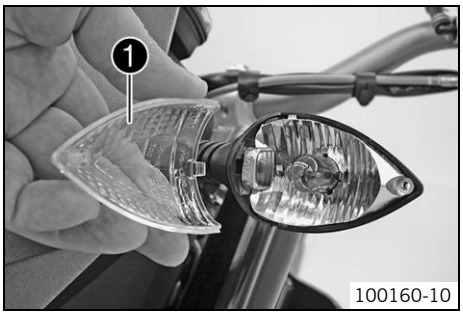


**Main work**

– Remove the screw on the rear of the turn signal housing.
– Carefully swing turn signal glass ❶ forward and take it off.
– Press the turn signal bulb carefully into the socket, turn it counterclockwise by about 30°, and take it out of the socket.

**Info**
Do not touch the reflector with your fingers, and keep it free from grease.

– Press the new turn signal bulb carefully into the socket and turn it clockwise until it stops.

| |
|---|
| Turn signal (RY10W / socket BAU15s) (☛ p. 194) |

– Position the turn signal glass.
– Insert the screw and turn it counterclockwise first until it engages in the thread. Tighten the screw slightly.

**Finishing work**

– Check the turn signal system function.

## 16.1 Removing the engine

**Preparatory work**

- Switch off all power consumers and switch off the engine.
- Remove the seat. (☛ p. 61)
- Disconnect the battery. (☛ p. 83)
- Raise the motorcycle with the work stand. (☛ p. 11)
- Take off the side cover. (☛ p. 62)
- Remove the air filter box. (☛ p. 57)
- Remove the manifold. (☛ p. 53)
- Drain the coolant. (☛ p. 178)

**Main work**

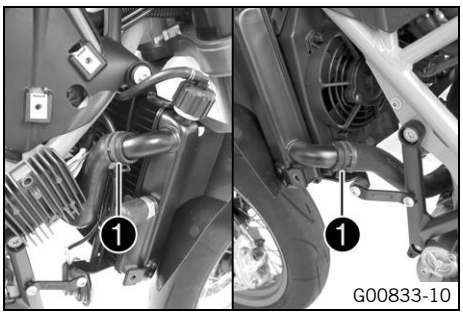


- Loosen the spring band clamp ❶ using the special tool. Detach the radiator hoses.

| Pliers for spring band clamp (60029057100) (☛ p. 231) |
|---|

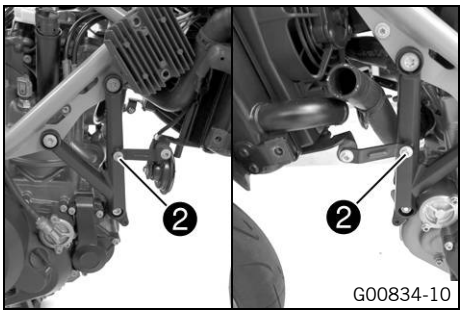


- Remove screws ❷.

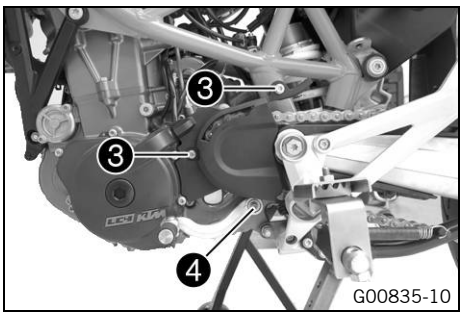


- Remove screws ❸.
- Take off the engine sprocket cover.
- Remove screw ❹.
- Take off the shift lever.

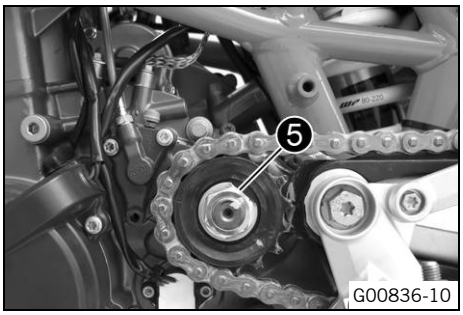


- Bend up lock washer ❺.
- Have an assistant operate the rear brake.
- Remove the nut of the engine sprocket with the lock washer.

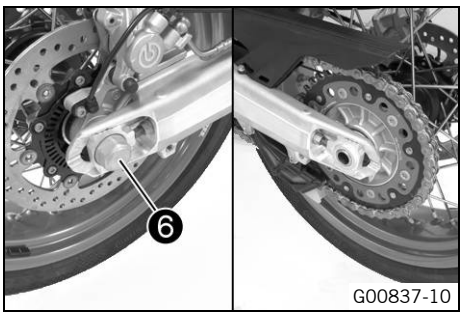


- Remove nut ❻. Remove the chain adjuster.
- Pull out the wheel spindle only far enough to allow the rear wheel to be pushed forward.
- Push the rear wheel forward as far as possible and take the chain off the rear sprocket.

**Info**
The rear wheel does not need to be fully removed.

– Take off the engine sprocket.

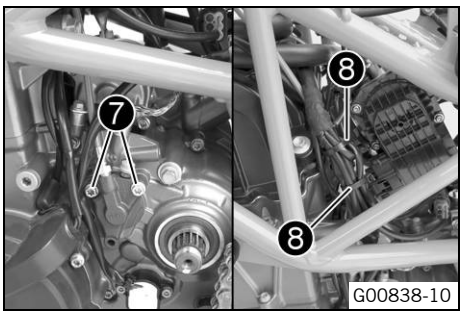


– Remove screws ❼.
– Remove cable binder ❽.
– Take off the clutch slave cylinder with the gasket and hang it to the side.

**Info**
Do not kink the clutch line.
Do not activate the clutch lever if the clutch slave cylinder has been removed.

– Take off the clutch push rod.

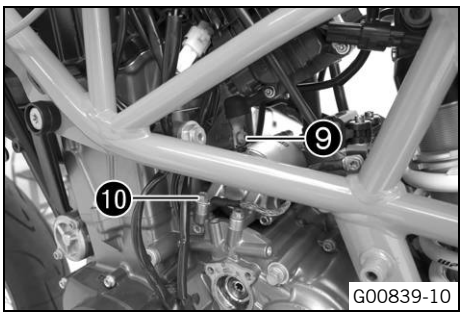


– Pull back the protection cap. Remove nut ❾.
– Remove screw ❿.

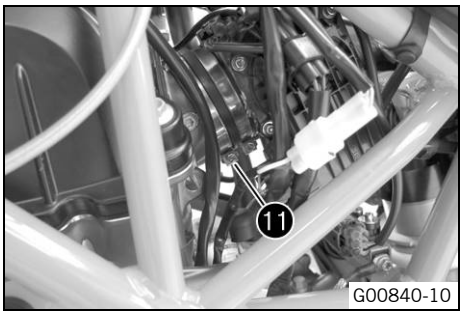


– Loosen hose clip ⓫.
– Pull off the throttle valve body from the rear.

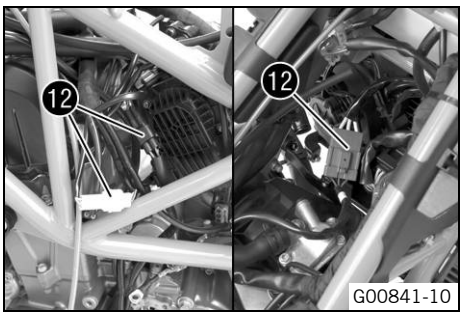


– Disconnect plug-in connector ⓬ of the gear position sensor, crankshaft position sensor, and alternator.

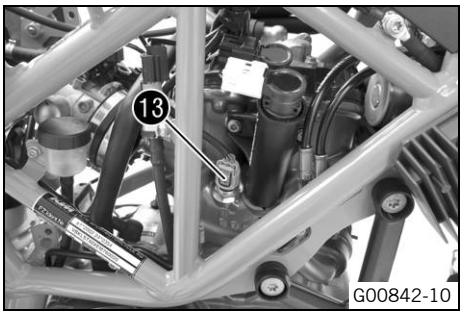


– Detach the spark plug connectors.
– Unplug the connector of the engine coolant temperature sensor ⓭.

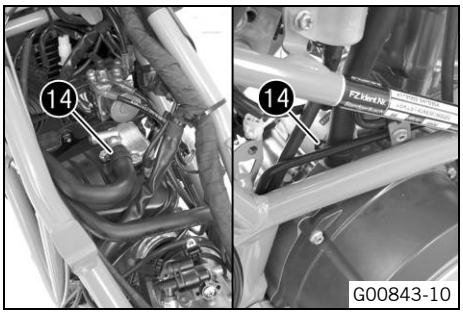


– Loosen the spring band clamps ⓮ using the special tool.

| Pliers for spring band clamp (60029057100) (☛ p. 231) |
|---|

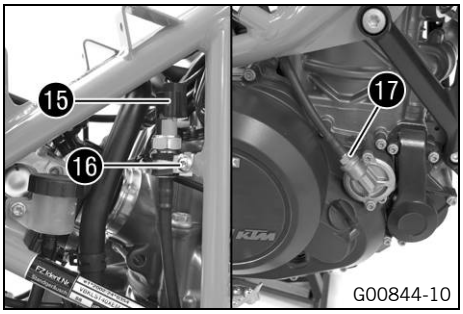


– Detach connector ⓯ of the oil pressure sensor. Remove screw ⓰.
– Release connection ⓱. Remove the line with the oil pressure sensor.

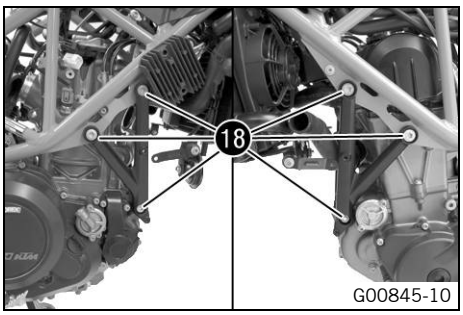


– Remove screws ⓲. Remove the engine bearer.

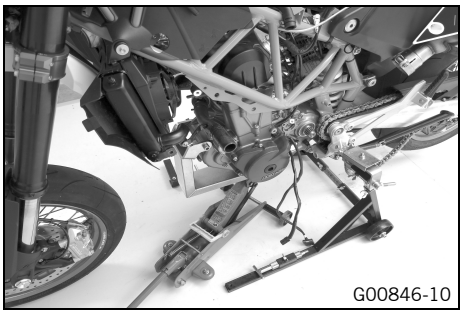


– Position the floor jack under the engine and fix it using the special tool.

| |
|---|
| Floor jack attachment (75029055000) (☛ p. 235) |

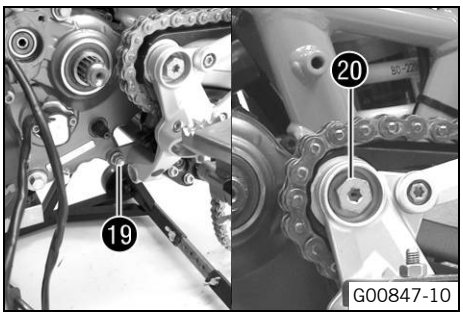


– Remove nut ⓳ and screw ⓴ of the lower engine bracket.

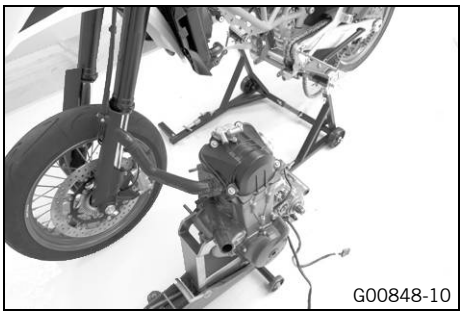


– Lower the engine.

**Info**
You should have an assistant for this step.
Make sure that the motorcycle is sufficiently secured against falling over.
Protect the frame and attachments from damage.

## 16.2 Installing the engine

**Preparatory work**

– Raise the engine onto the special tool and fix it.

| |
|---|
| Floor jack attachment (75029055000) (☛ p. 235) |

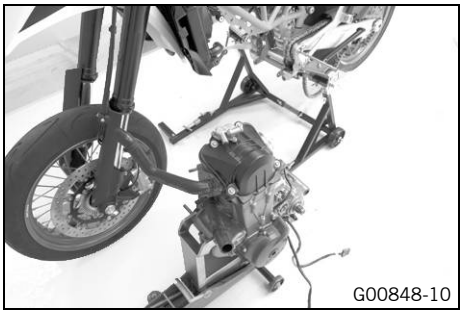
G00848-10

**Main work**

– Position the engine in the frame.

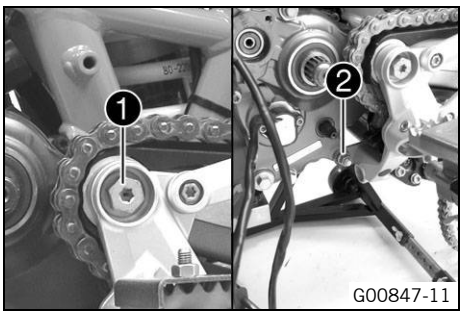

G00847-11

– Mount swingarm pivot.
– Mount the screw of swingarm pivot ❶ but do not tighten yet.
– Mount screw connection ❷ of the lower engine attachment but do not tighten yet.

**Info**
You should have an assistant for this step.
Make sure that the motorcycle is sufficiently secured against falling over.
Protect the frame and attachments from damage.

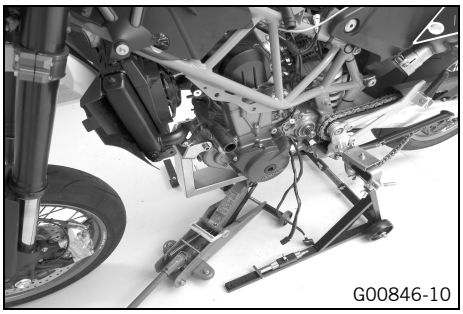
G00846-10

– Remove the floor jack with the special tool.

| |
|---|
| Floor jack attachment (75029055000) (☛ p. 235) |

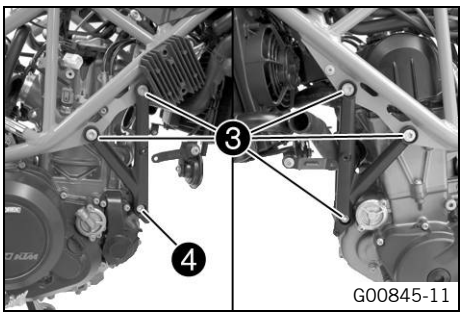

G00845-11

– Position the engine bearer.
– Mount and tighten screws ❸.

Guideline

| | | |
|---|---|---|
| Screw, engine bearer on frame | M10 | 45 Nm (33.2 lbf ft) |

– Mount and tighten fitting ❹.

Guideline

| | | | |
|---|---|---|---|
| Engine carrying screw | M10 | 45 Nm (33.2 lbf ft) | **Loctite® 243™** |

– Tighten the screw of swingarm pivot ❶.

Guideline

| | | |
|---|---|---|
| Screw, swingarm pivot | M12 | 80 Nm (59 lbf ft) |

– Tighten fitting ❷ of the lower engine bracket.

Guideline

| | | | |
|---|---|---|---|
| Engine carrying screw | M10 | 45 Nm (33.2 lbf ft) | **Loctite® 243™** |

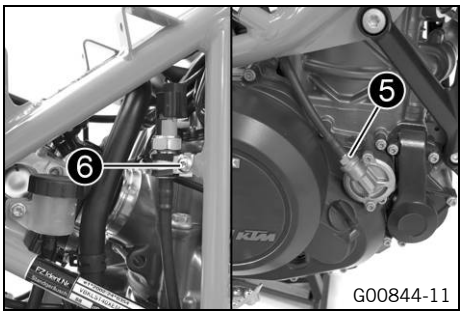

G00844-11

– Position the line with the oil pressure sensor. Mount and tighten connection ❺.

Guideline

| | | |
|---|---|---|
| Oil pressure sensor line | M10x1 | 10 Nm (7.4 lbf ft) |

– Position the clamp of the oil line. Mount and tighten screw ❻. Plug in the connector.

Guideline

| | | |
|---|---|---|
| Remaining screws, chassis | M6 | 10 Nm (7.4 lbf ft) |

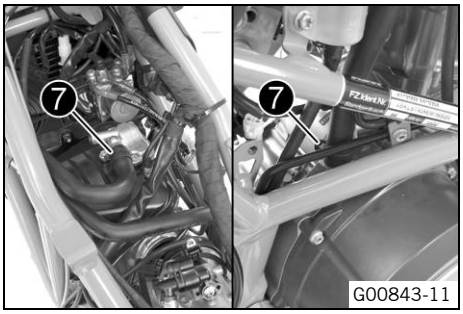


– Position the hoses of the engine breather, the SAS, and the oil return line. Mount the spring band clamp ❼ using the special tool.

| |
|---|
| Pliers for spring band clamp (60029057100) (☛ p. 231) |

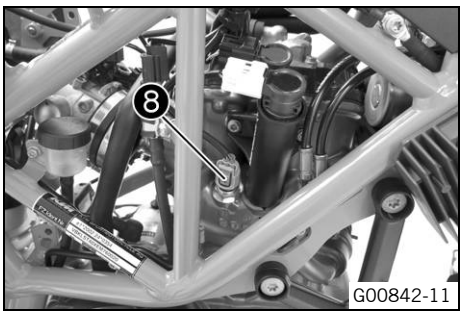


– Attach the spark plug connectors.
– Plug in the connector of the engine coolant temperature sensor ❽.

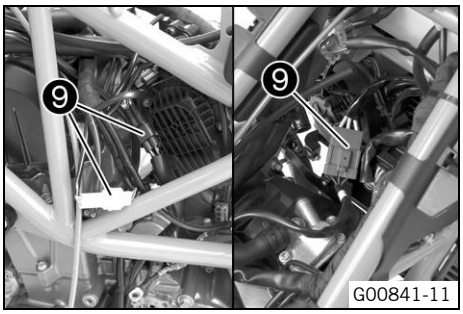


– Connect plug-in connectors ❾ of the gear position sensor, crankshaft position sensor, and alternator.

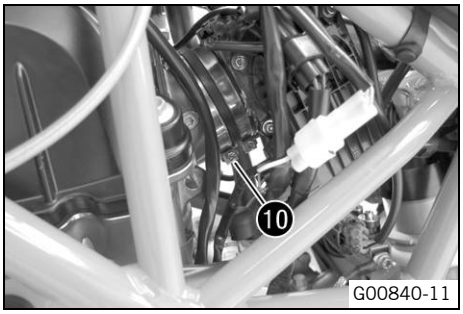


– Position the throttle valve body.
– Position and tighten hose clip ❿.

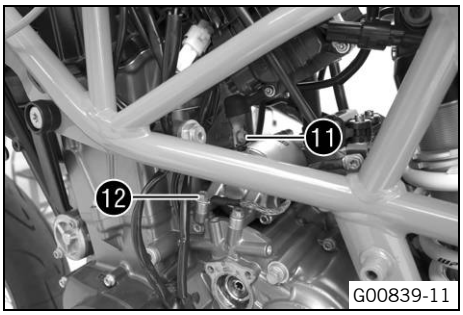


– Position the electrical connection ⓫ on the starter motor. Mount and tighten screw. Mount the protection cap.

Guideline

| | | |
|---|---|---|
| Screw, cable on starter motor | M5 | 3 Nm (2.2 lbf ft) |

– Position the ground wire on the starter motor. Mount and tighten screw ⓬.

Guideline

| | | | |
|---|---|---|---|
| Screw, starter motor | M6x20 | 10 Nm (7.4 lbf ft) | **Loctite® 243™** |

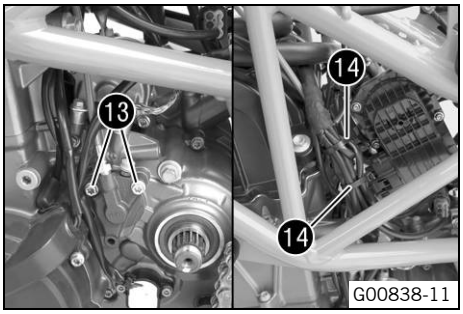


– Insert the clutch push rod.
– Position the clutch slave cylinder.
– Mount and tighten screws ⓭.

Guideline

| | | | |
|---|---|---|---|
| Screw, clutch slave cylinder | M6x20 | 10 Nm (7.4 lbf ft) | **Loctite® 243™** |
| Screw, clutch slave cylinder | M6x35 | 10 Nm (7.4 lbf ft) | – |

– Secure the cable with cable binders ⓮.

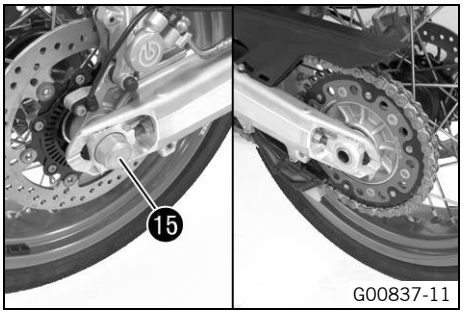


- Mount the engine sprocket with the chain.
- Position the new lock washer and mount nut but do not tighten yet.
- Position the rear wheel.
- Mount the chain adjuster and nut.
- Push the rear wheel forward so that the chain adjusters rest against the tensioning screws, and tighten nut 15.

Guideline

| | | |
|---|---|---|
| Nut, rear wheel spindle | M25x1.5 | 90 Nm (66.4 lbf ft) |

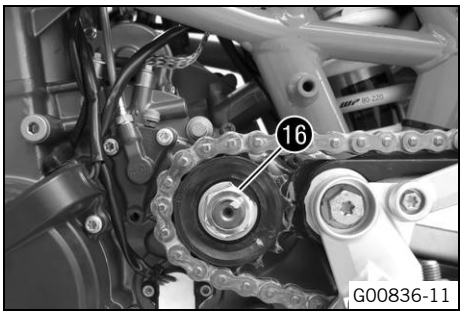


- Have an assistant operate the rear brake.
- Tighten nut.

Guideline

| | | | |
|---|---|---|---|
| Nut, engine sprocket | M20x1.5 | 80 Nm (59 lbf ft) | **Loctite® 243™** |

- Secure the nut with lock washer 16.

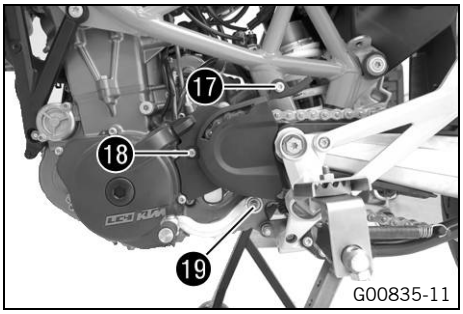


- Position the engine sprocket cover.
- Mount and tighten screw 17.

Guideline

| | | |
|---|---|---|
| Remaining screws, chassis | M8 | 25 Nm (18.4 lbf ft) |

- Mount and tighten screw 18.

Guideline

| | | |
|---|---|---|
| Remaining screws, chassis | M6 | 10 Nm (7.4 lbf ft) |

- Position the shift lever.
- Mount and tighten screw 19.

Guideline

| | | | |
|---|---|---|---|
| Screw, shift lever | M6 | 14 Nm (10.3 lbf ft) | **Loctite® 243™** |

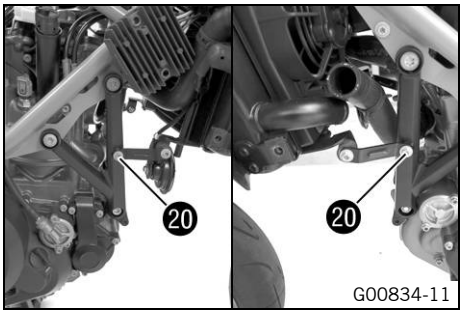


- Mount and tighten screw 20.

Guideline

| | | |
|---|---|---|
| Screw, upper radiator bracket | M6 | 10 Nm (7.4 lbf ft) |

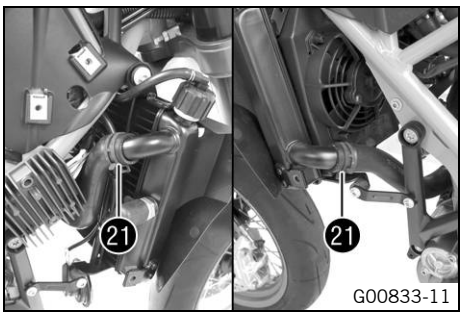


- Position the radiator hoses. Mount the spring band clamps 21.

| |
|---|
| Pliers for spring band clamp (60029057100) (☛ p. 231) |

- Install the manifold. (☛ p. 54)
- Disconnect the battery. (☛ p. 83)

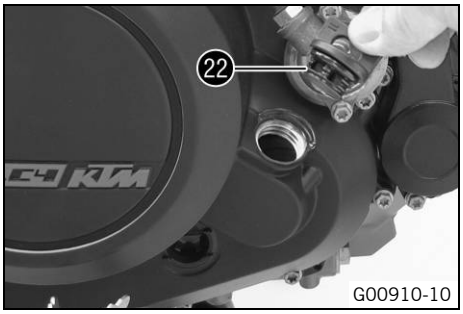

G00910-10

– Remove the oil filler plug 22 with the O-ring from the clutch cover and fill up with engine oil.

| | | | |
|---|---|---|---|
| Engine oil | 1.70 l (1.8 qt.) | Engine oil (SAE 10W/60) (00062010035) (☛ p. 224) | |
| | | Alternative engine oil | Engine oil (SAE 10W/50) (☛ p. 224) |

– Mount and tighten the filler plug with O-ring 22.

**Finishing work**

– Fill/bleed the cooling system. (☛ p. 178)
– Install the air filter box. (☛ p. 59)
– Mount the side cover. (☛ p. 62)
– Mount the seat. (☛ p. 62)
– Remove the motorcycle from the work stand. (☛ p. 12)
– Perform the initialization run. (☛ p. 189)
– Take a short test ride.
– Read out the fault memory using the KTM diagnostics tool.
– Check the engine for leakage.
– Check the engine oil level. (☛ p. 181)
– Check the coolant level. (☛ p. 180)

## 16.3 Disassembling the engine

### 16.3.1 Clamping the engine into the engine assembly stand

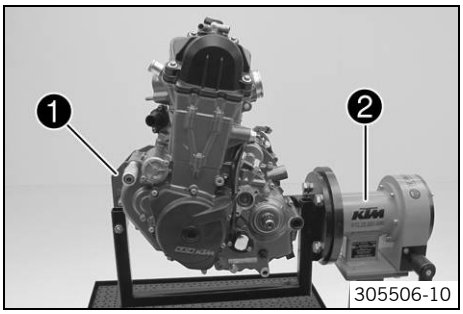

305506-10

– Mount special tool 1 on engine assembly stand 2.

| |
|---|
| Engine assembly stand (61229001000) (☛ p. 232) |
| Support for engine assembly stand (75012001060) (☛ p. 232) |
| Holder for engine assembly stand (75012001070) (☛ p. 232) |

– Mount the engine on special tool 1.

**Info**
Have an assistant help you or use a crane.

### 16.3.2 Draining the engine oil

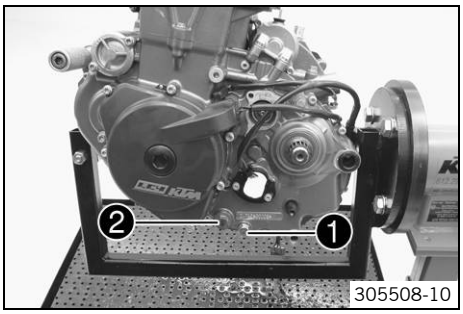

305508-10

– Remove the oil drain plug 1 with the magnet and seal ring.
– Remove plug 2 with oil screen and the O-rings.

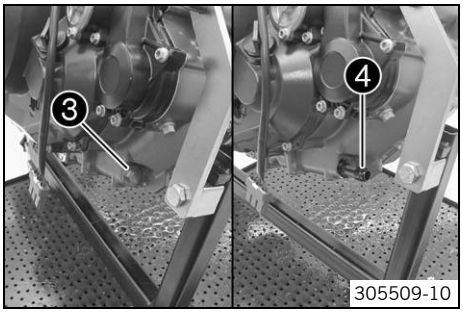

305509-10

– Remove plug 3 with oil screen 4 and the O-rings.
– Completely drain the engine oil.

### 16.3.3 Removing the starter motor

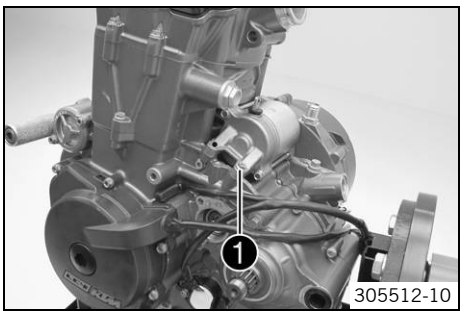


- Remove oil throttle ❶.
- Take off the starter motor.

### 16.3.4 Removing the valve cover

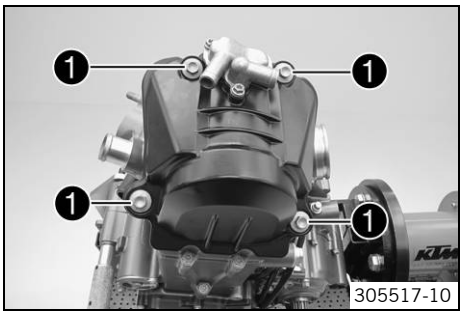


- Remove screws ❶.
- Take off the valve cover with the valve cover seal.

### 16.3.5 Removing the alternator cover

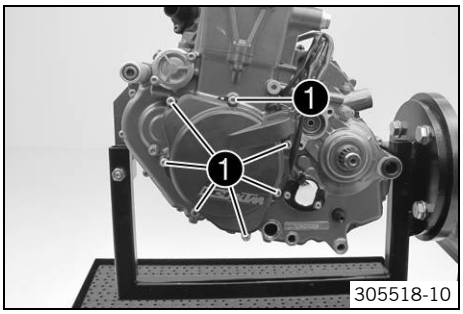


- Remove screws ❶.
- Take off the alternator cover.

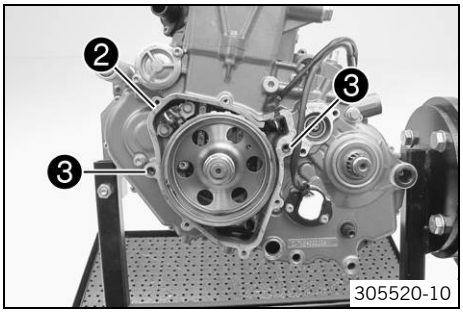


- Take off alternator cover gasket ❷ and remove dowels ❸.

### 16.3.6 Removing the spacer

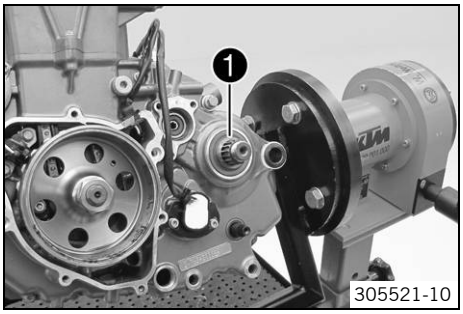


- Remove spacer ❶.

### 16.3.7 Removing the gear position sensor

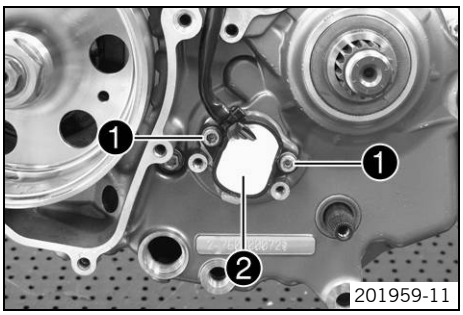


- Remove screws ❶ with the washers.
- Remove gear position sensor ❷ with the O-ring.

### 16.3.8 Removing the oil filter

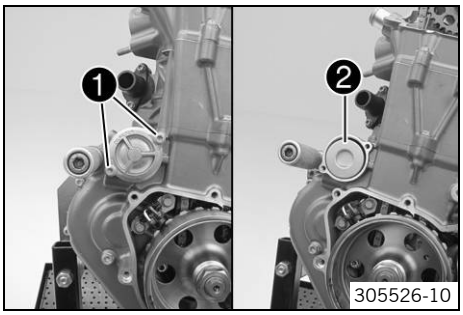


- Remove screws ❶.
- Take off the oil filter cover with the O-ring.
- Remove oil filter ❷.

| |
|---|
| Circlip pliers reverse (51012011000) (☛ p. 229) |

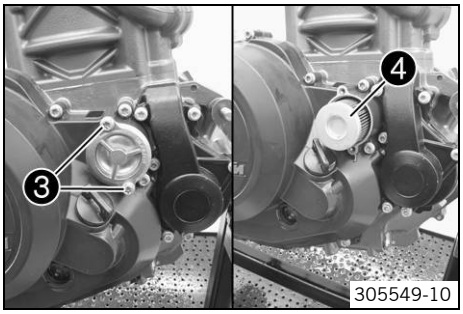


- Remove screws ❸.
- Take off the oil filter cover with the O-ring.
- Remove oil filter ❹.

| |
|---|
| Circlip pliers reverse (51012011000) (☛ p. 229) |

### 16.3.9 Removing the thermostat

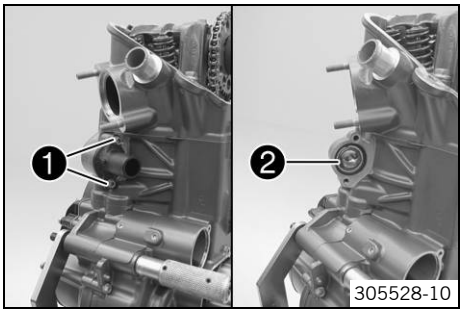


- Remove screws ❶.
- Take off the thermostat case.
- Remove thermostat ❷.

### 16.3.10 Setting engine to ignition top dead center

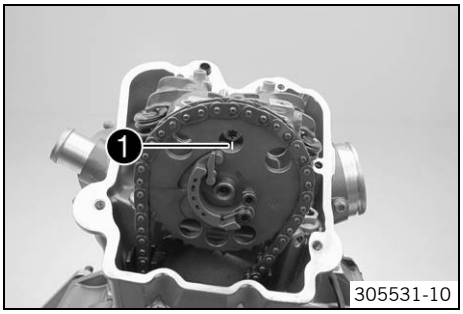


- Turn the crankshaft counterclockwise until markings ❶ of the camshafts are flush with the marks of the camshaft support plate.

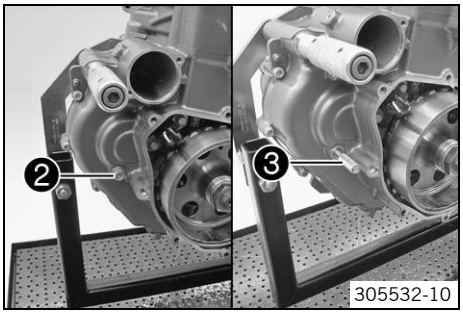


– Remove screw ❷.

**Info**
Look through the hole to check that the position hole of the balancer shaft is visible.

– Screw in special tool ❸.

Engine blocking screw (77329010000) (☛ p. 237)

## 16.3.11 Removing the spark plugs

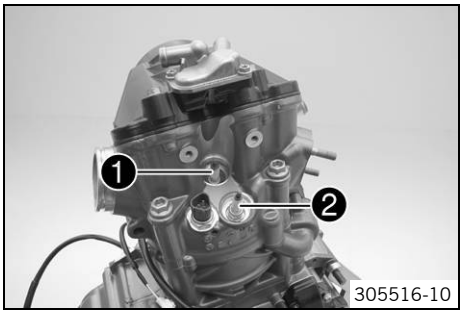


– Remove spark plugs ❶ and ❷.

Spark plug wrench (75029172000) (☛ p. 236)

## 16.3.12 Removing the timing chain tensioner

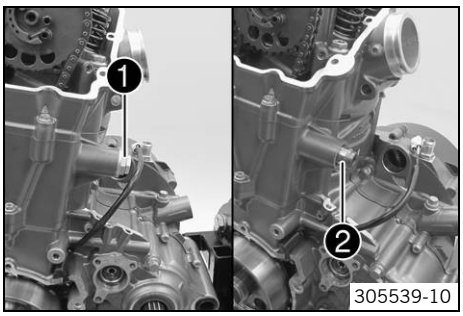


– Remove screw ❶ with the seal ring.
– Remove timing chain tensioner ❷.

## 16.3.13 Removing the camshafts

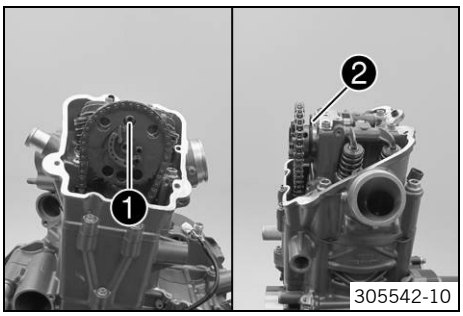


– Remove screw ❶.
– Take off the camshaft support plate ❷.

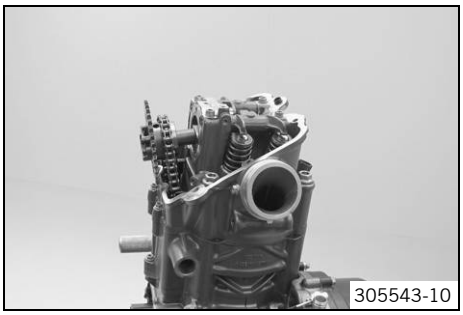


– Pull the camshaft out of the bearing seats.
– Take the timing chain off the camshaft gear.
– Remove the camshaft.

### 16.3.14 Removing the cylinder head

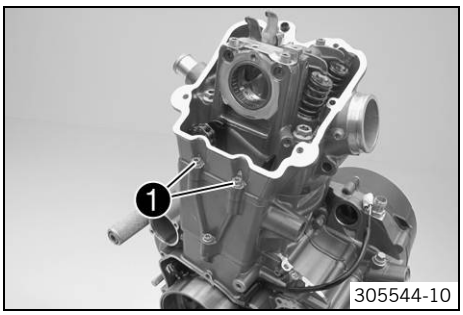


– Remove screws ❶.

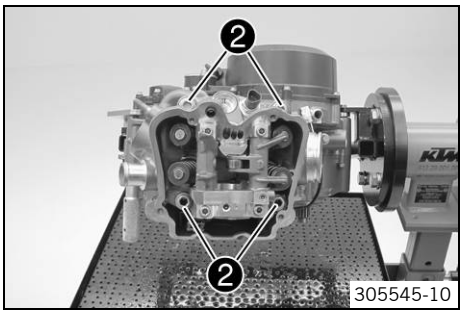


– Loosen screws ❷ diagonally and remove them.
– Take off the cylinder head.

### 16.3.15 Removing the piston

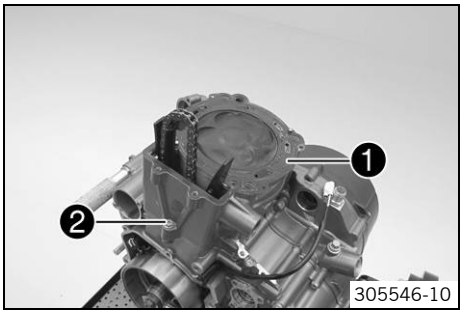


– Take off the cylinder head gasket ❶.
– Remove screw ❷.
– Push the cylinder upward.

**Info**
Push the cylinder upward only far enough to allow removal of the piston pin. Ensure that the two grooved pins remain in place.

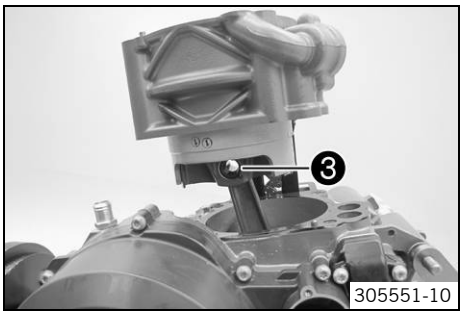


– Remove piston pin retainer ❸.
– Remove the piston pin.
– Take off the cylinder with the piston.
– Push the piston upward out of the cylinder.

**Info**
If no other work is required on the cylinder and the piston, you can leave the piston in the cylinder.

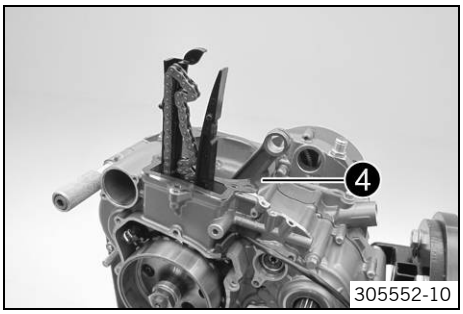


– Take off the cylinder base gasket ❹.

**Info**
Ensure that the two grooved pins remain in place.

### 16.3.16 Removing the water pump impeller

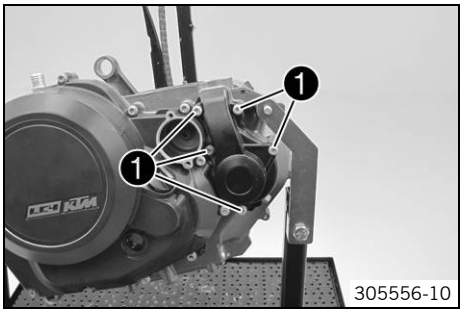


– Remove screws ❶. Take off the water pump cover.

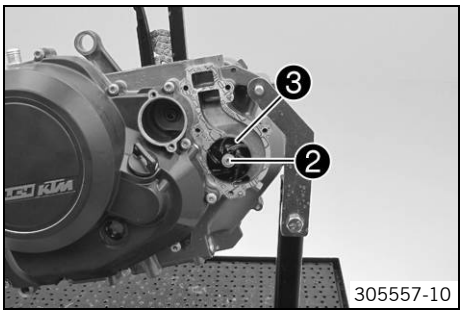


– Remove screw ❷.
– Remove water pump impeller ❸.
– Take off the water pump cover seal.

**Info**
Ensure the locating pins remain in place.

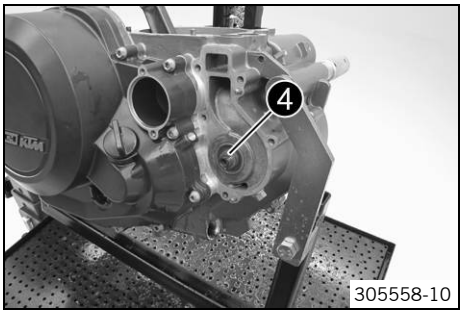


– Remove formed washer ❹.

### 16.3.17 Removing the rotor

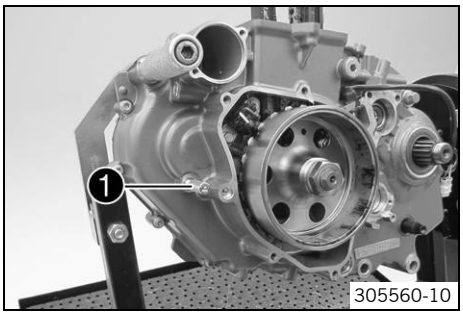


– Remove special tool ❶.

Engine blocking screw (77329010000) (☛ p. 237)

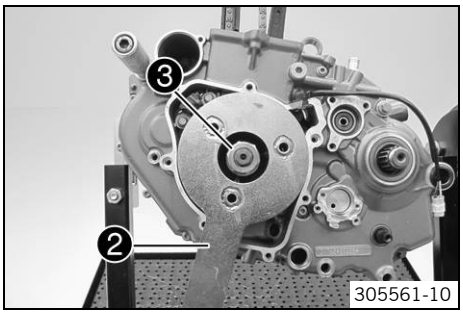


– Hold the rotor with special tool ❷.

Holding spanner (75029091000) (☛ p. 236)

**Info**
Make sure that the crankshaft is not blocked.

– Remove nut ❸ and the locking edge washer.

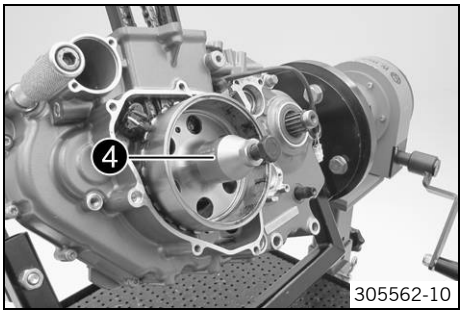


– Mount the special tool ❹ on the rotor.

| Extractor (58429009000) (☛ p. 229) |
|---|

– Hold it tight using the special tool and pull off the rotor by turning the screw in.
– Remove the special tool.

## 16.3.18 Removing the timing chain rails

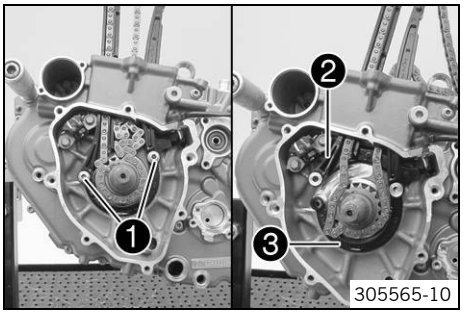


– Remove screws ❶.
– Pull the timing chain guide rails ❷ out of the timing chain securing guide ❸.

> **Info**
> The support bushing is plugged into the timing chain securing guide through the timing chain guide rails.

– Remove the timing chain guide rails upward out of the timing chain shaft.

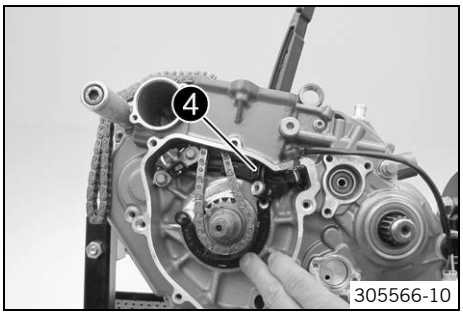


– Hold the timing chain securing guide tight and pull the timing chain tensioning rail ❹ out of the timing chain securing guide.
– Remove the timing chain tensioning rail upward out of the timing chain shaft.
– Remove the timing chain securing guide.

## 16.3.19 Removing the timing chain and timing chain sprocket

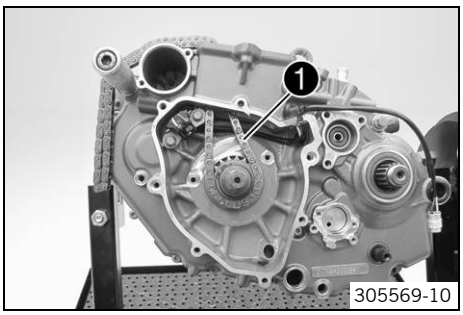


– Slip out timing chain ❶.

> **Info**
> If the timing chain will be used again, mark the direction of travel.

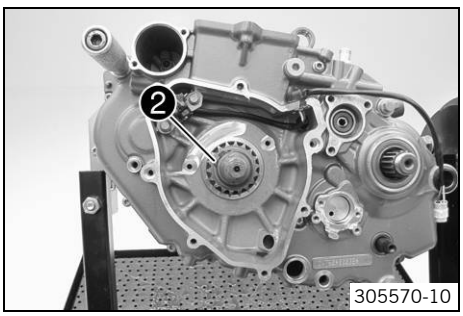


– Take off lock ring ❷.

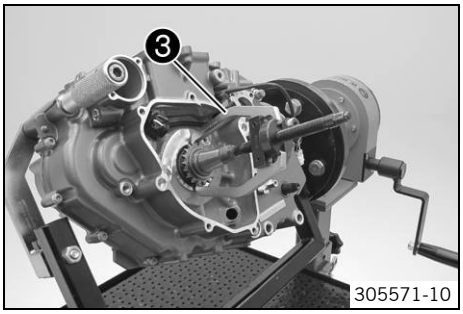


– Pull off the timing chain sprocket with special tool ❸.

| Extractor (59029033000) (☛ p. 230) |
|---|

## 16.3.20 Removing the ignition pulse generator

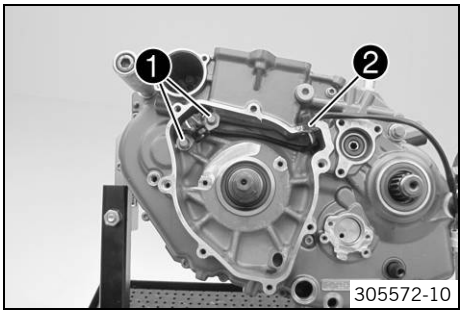


– Remove screws ❶.
– Pull cable sleeve ❷ out of the engine case.
– Remove the ignition pulse generator.

## 16.3.21 Removing the clutch cover

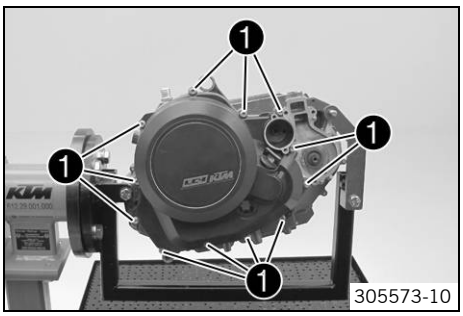


– Remove screws ❶.
– Take off the clutch cover.

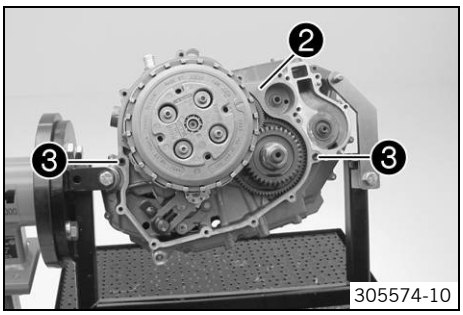


– Remove the clutch cover gasket ❷.
– Take off dowels ❸.

## 16.3.22 Removing the spacer and spring

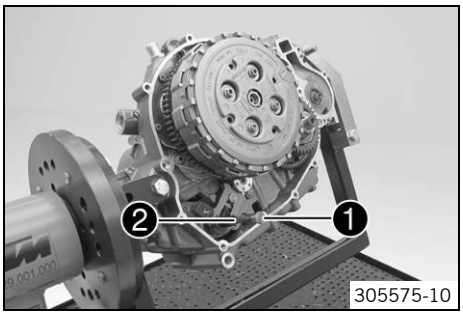


– Remove spacer ❶ and spring ❷.

### 16.3.23 Removing the clutch basket

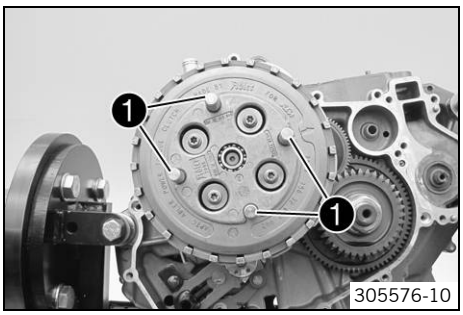


– Clamp the antihopping clutch with special tool ❶.

Assembly screws (75029033000) (☛ p. 233)

**Info**
Apply the special tool with the hand only, do not use another tool.

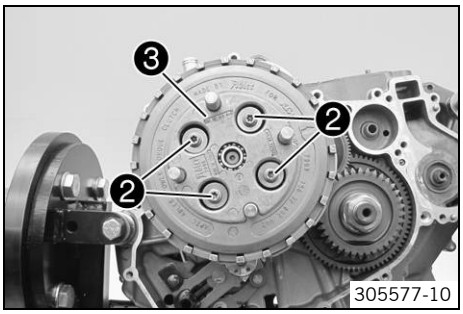


– Loosen screws ❷ diagonally and remove them with their spring retainers and clutch springs.
– Remove pressure cap ❸.

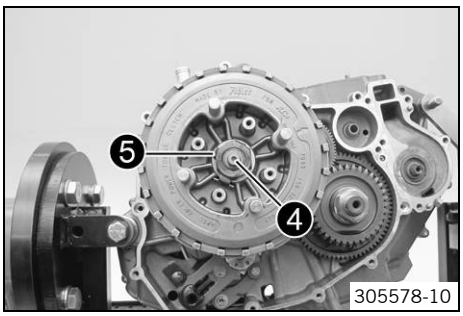


– Remove pressure piece ❹.
– Bend open lock washer ❺.

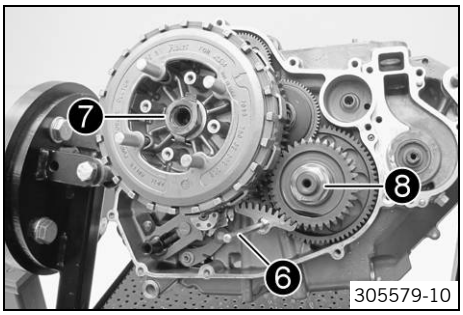


– Hold the clutch basket with special tool ❻.

Gear segment (75029081000) (☛ p. 236)

**Info**
Make sure that the crankshaft is not blocked.

– Remove nut ❼.
– Remove the lock washer.
– Remove nut ❽.

**Info**
Left-handed thread!

– Remove the special tool.

Gear segment (75029081000) (☛ p. 236)

– Take out the antihopping clutch.

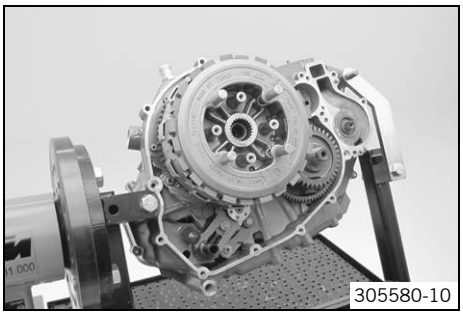

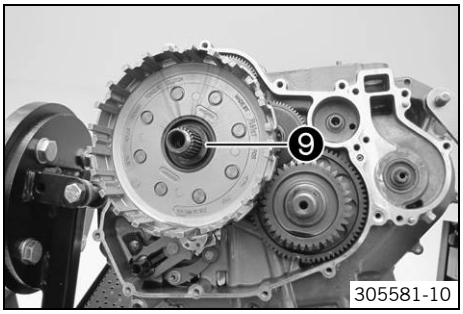


– Remove stepped washer ❾.

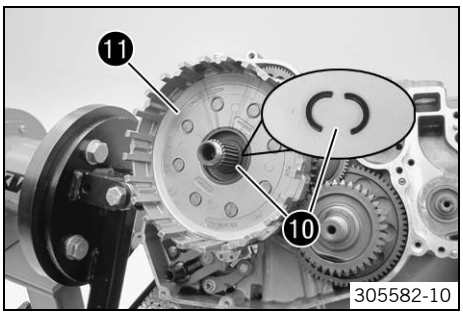


– Remove half washers ❿.
– Take off the clutch basket ⓫.

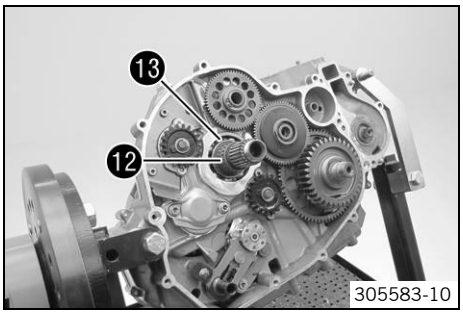


– Remove needle bearing ⓬ and supporting plate ⓭.

## 16.3.24 Removing the primary gear

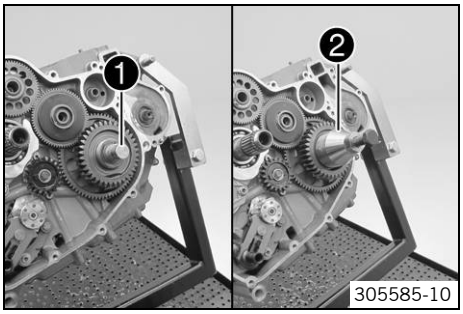


– Position special tool ❶.

| Protection cover (75029090000) (☛ p. 236) |
|---|

– Mount special tool ❷.

| Extractor (75029021000) (☛ p. 233) |
|---|

– Hold it using the special tool and pull off the primary gear by turning the screw in.
– Remove the special tools.

## 16.3.25 Removing the starter drive

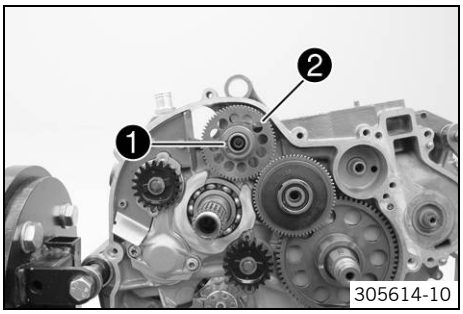


– Remove lock ring ❶.
– Take off the starter idler gear ❷ with the washers.

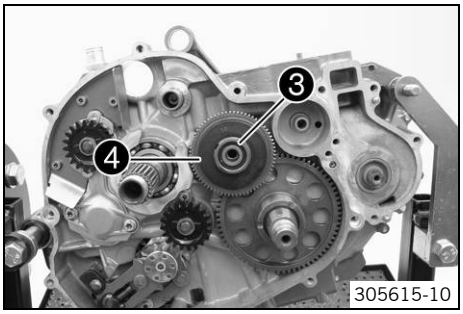


- Remove lock ring ❸.
- Remove torque limiter ❹ with the washers and needle bearing.

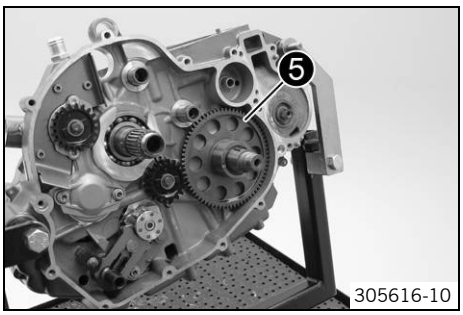


- Take off freewheel gear ❺.

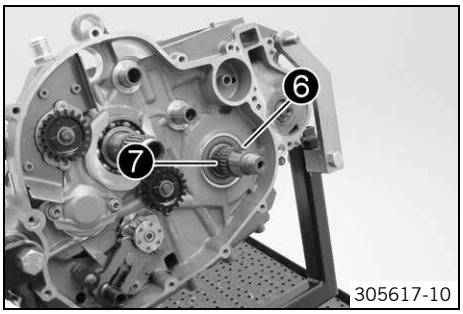


- Remove woodruff key ❻ and both needle bearings ❼.

## 16.3.26 Removing shift shaft

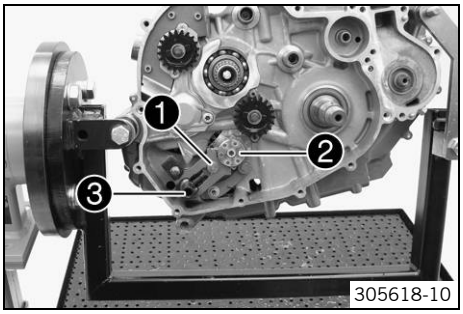


- Push sliding plate ❶ away from the shift drum locating ❷. Remove shift shaft ❸ with the washer.

## 16.3.27 Removing shift drum locating

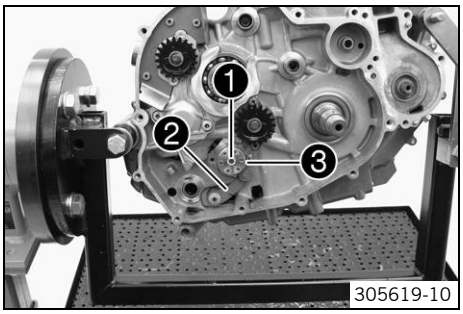


- Remove screw ❶.
- Press locking lever ❷ away from shift drum locating ❸ and take off the shift drum locating.
- Release the locking lever.

## 16.3.28 Removing locking lever

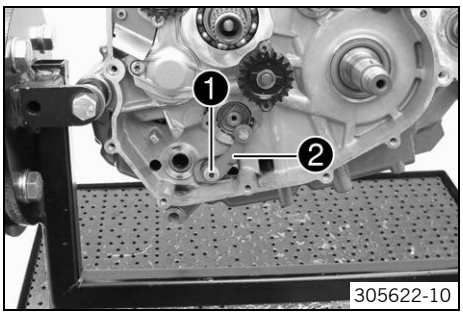


- Remove screw ❶.
- Take off locking lever ❷ with the sleeve and spring.

## 16.3.29 Removing the oil pumps

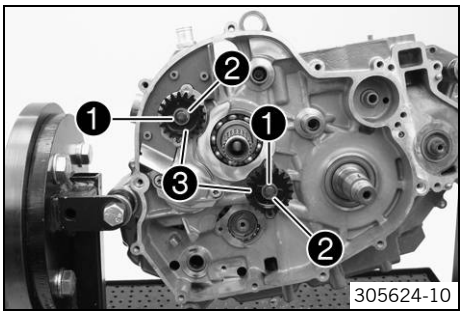


- Remove lock washers ❶ and normal washers ❷ from both oil pumps.
- Take off the oil pump gear wheels ❸.

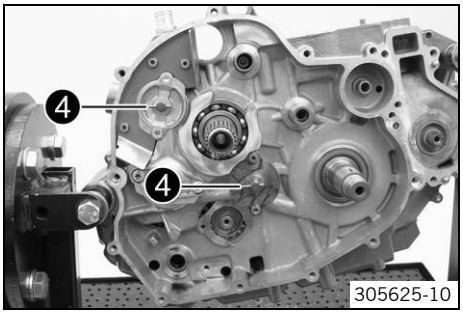


- Remove pins ❹ and washers.

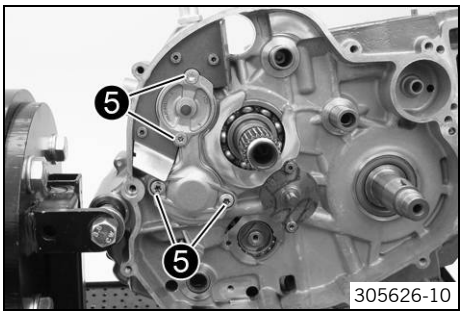


- Remove screws ❺.
- Take off the oil pump cover.

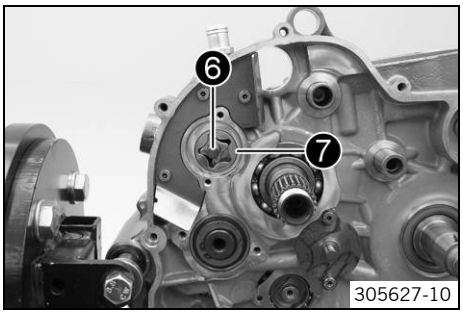


- Remove oil pump shaft ❻ with the internal rotors.
- Remove external rotor ❼.

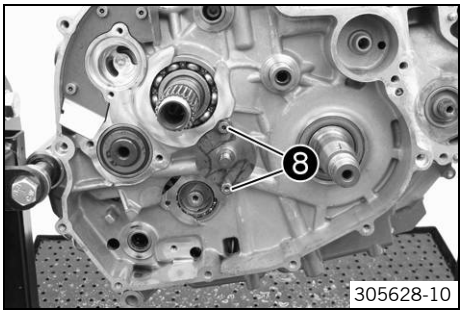


- Remove screws ❽.
- Take off the oil pump cover.

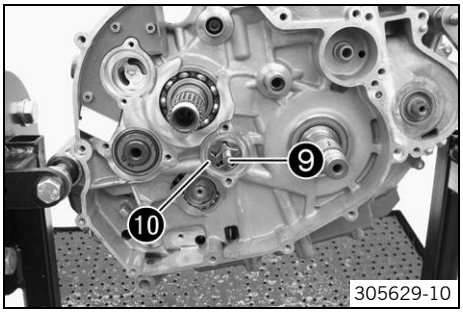


- Remove oil pump shaft ❾ with the internal rotors.
- Remove external rotor ❿.

## 16.3.30 Removing the left engine case

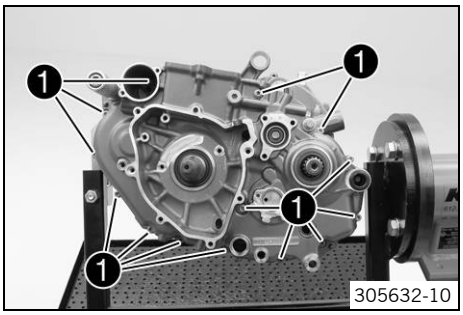


- Remove screws ❶.
- Swing the left section of the engine case up and remove the nut or screw of the engine fixing arm.

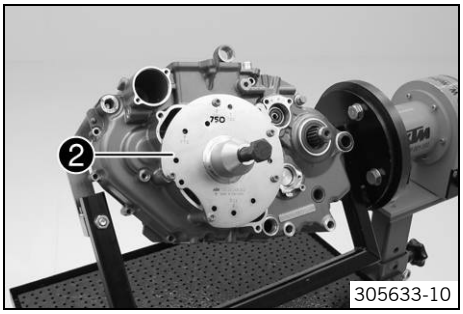


- Install special tool ❷ with suitable screws.

| |
|---|
| Extractor (75029048000) (☛ p. 235) |

**Info**
Use the **750** drill hole.

- Pull off the section of the engine case.

**Info**
Do not tension the section of the engine case.
The balancer shaft and the main shaft have a stop disk; these usually stick to the bearing.

- Take off the left section of the engine case.
- Remove the special tool.
- Remove dowels ❸.
- Remove O-ring ❹.

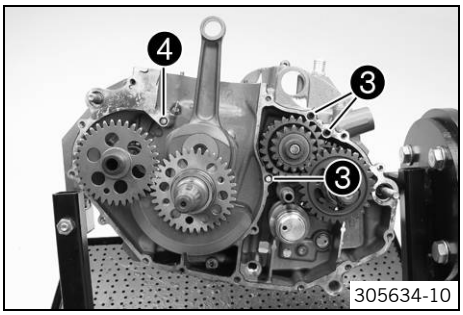

## 16.3.31 Removing the crankshaft and balancer shaft

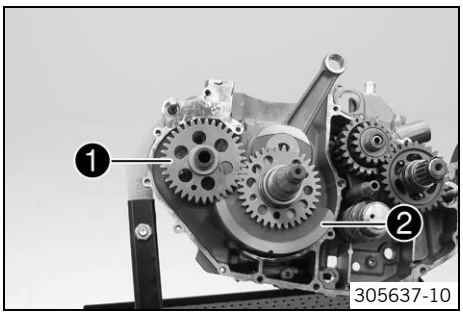


– Remove balancer shaft ❶ and crankshaft ❷.

## 16.3.32 Removing the transmission shafts

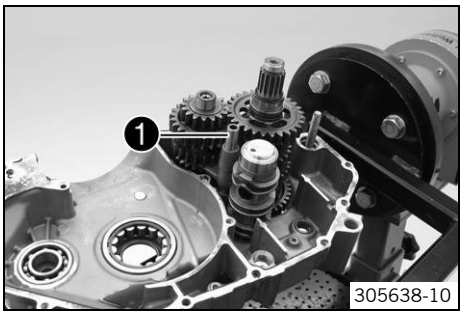


– Remove shift rail ❶.

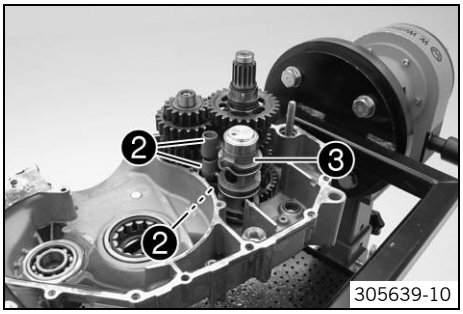


– Swing shift forks ❷ to one side.
– Remove shift drum ❸.

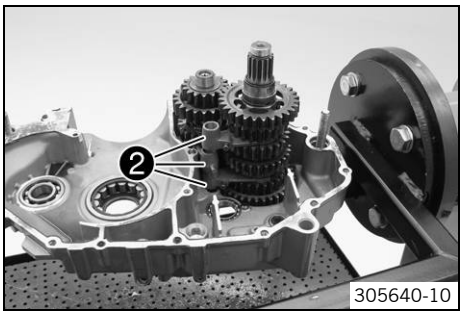


– Remove shift forks ❷.

> **Info**
> Ensure that the pins remain in place.

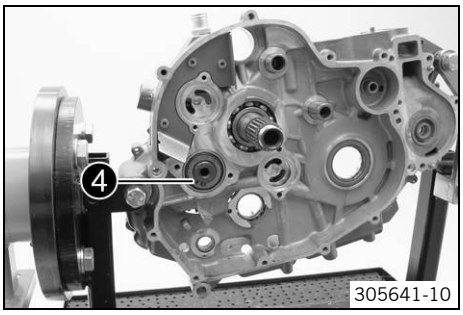


– Remove lock ring ❹ and the stop disk.

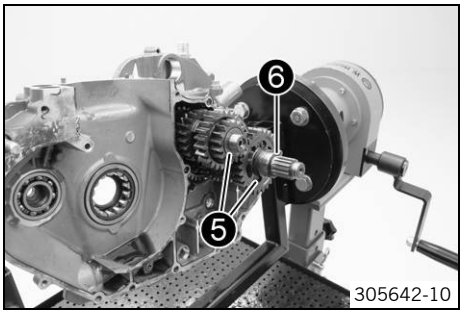

305642-10

– Remove transmission shafts ❺.

**Info**
The stop disk of the countershaft usually sticks to the bearing.

– Take off the O-ring of countershaft ❻.

## 16.4 Work on individual parts

### 16.4.1 Work on the right section of the engine case

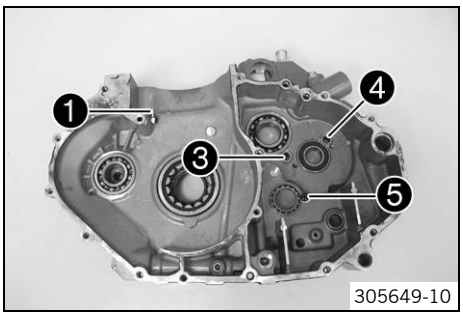

305649-10

– Remove oil jet ❶.
– Remove bearing locks of the main shaft bearing ❸, of the countershaft bearing ❹, and of the shift drum bearing ❺.
– Remove any sealing mass remnants and clean the engine case section thoroughly.
– Pull the dowels out of the housing.
– Warm the engine case section in an oven.

Guideline

| |
|---|
| 150 °C (302 °F) |

– Knock the engine case section against a level wooden plate. This will cause the bearings to drop out of the bearing seats.

**Info**
Any bearings that remain in the engine case section must be removed using a suitable tool.

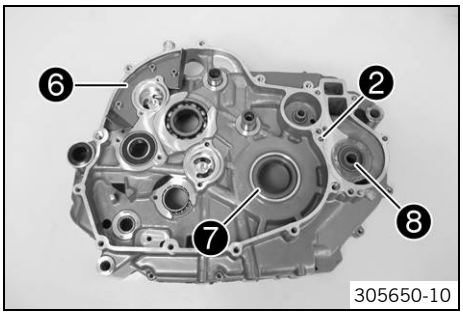

305650-10

– Remove oil jet ❷.
– Remove the cover plate ❻ for the oil return line.
– Press out the shaft seal ring ❼ of the crankshaft from the inside to the outside.
– Remove the shaft seal rings ❽ of the water pump.
– Press in the shaft seal ring ❼ of the crankshaft from the outside to the inside with the open side facing in.

**Info**
The shaft seal ring must be flush on the outside.

– Press in the shaft seal rings of the water pump with the open side facing out so that it is flush.
– Warm the engine case section again.

Guideline

| |
|---|
| 150 °C (302 °F) |

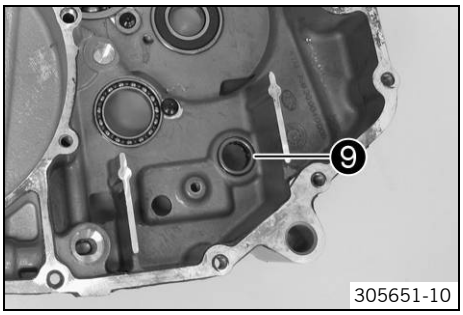

305651-10

– Insert the new cold bearings into the bearing seats of the hot engine case section and, if necessary, use a suitable press drift to push the bearing from the inside to the outside, all the way to the stop or so it is flush.

**Info**
The shift shaft bearing ❾ must be pressed in from the outside to the inside until it is flush.
When pressing the bearing in, ensure that the engine case section is level to prevent damage.
Only press the bearings in via the outer bearing race; otherwise, the bearings will be damaged when they are pressed in.

– After the engine case section has cooled, check that the bearings are firmly seated.

**Info**
If the bearings are not firmly seated after cooling, it is likely that they will rotate in the engine case when warm. In this case, the engine case must be renewed.

– Position all bearing locks. Mount and tighten the screws.

Guideline

| | | | |
|---|---|---|---|
| Locking screw for bearing | M5 | 6 Nm (4.4 lbf ft) | **Loctite® 243™** |

– Mount and tighten the oil jet ❶.

Guideline

| | | | |
|---|---|---|---|
| Oil jet, piston cooling | M6x0.75 | 4 Nm (3 lbf ft) | **Loctite® 243™** |

– Mount and tighten the oil jet ❷.

Guideline

| | | | |
|---|---|---|---|
| Oil nozzle for conrod bearing lubrication | M4 | 2 Nm (1.5 lbf ft) | **Loctite® 243™** |

– Blow compressed air through all oil channels and check that they are clear.
– Position the cover plate ❻. Mount and tighten the screws.

Guideline

| | | |
|---|---|---|
| Screw, cover plate for oil return line | M5 | 6 Nm (4.4 lbf ft) |

– Reinstall the dowels.

## 16.4.2 Work on the left section of the engine case

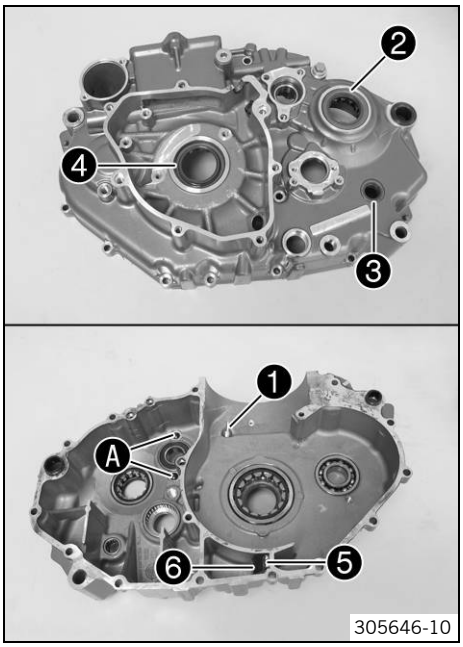


– Remove all dowels.
– Remove oil jet ❶.
– Remove the shaft seal ring of countershaft ❷ and shift shaft ❸.

**Info**
The shaft seal ring ❹ of the crankshaft cannot be removed before the crankshaft bearing.

– Screw off the membrane support plate ❺ and remove it together with membrane ❻.
– Remove screw Ⓐ with the washer.

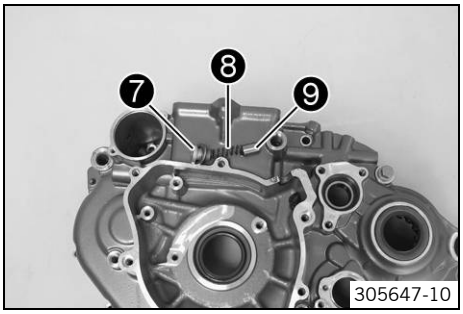


– Remove screw plug ❼ and take pressure spring ❽ with piston valve ❾ out of the drill hole.
– Remove any sealing mass remnants and clean the engine case section thoroughly.
– Warm the engine case section in an oven.

Guideline

| |
|---|
| 150 °C (302 °F) |

– Knock the engine case section against a level wooden plate. This will cause the bearings to drop out of the bearing seats.

**Info**
Any bearings that remain in the engine case section must be removed using a suitable tool.

– Press out the shaft seal ring of the crankshaft from the outside to the inside.
– Press in the shaft seal ring of the crankshaft from the inside to the outside with the open side facing out.

**Info**
The shaft seal ring must be flush on the outside.

– Warm the engine case section again.

Guideline

| |
|---|
| 150 °C (302 °F) |

– Insert the new cold bearings into the bearing seats of the hot engine case section and, if necessary, use a suitable press drift to push the bearing all the way to the stop or so that it is flush.

**Info**
When pressing the bearing in, ensure that the engine case section is level to prevent damage.
Only press the bearings in via the outer bearing race; otherwise, the bearings will be damaged when they are pressed in.

– After the engine case section has cooled, check that the bearings are firmly seated.

**Info**
If the bearings are not firmly seated after cooling, it is likely that they will rotate in the engine case when warm. In this case, the engine case must be renewed.

– Mount and tighten screw Ⓐ with the washer.

Guideline

| | | | |
|---|---|---|---|
| Locking screw for bearing | M5 | 6 Nm<br>(4.4 lbf ft) | **Loctite® 243™** |

– Press in the shaft seal ring of countershaft ❷ and shift shaft ❸ with the open side facing inwards so that it is flush.
– Mount and tighten the oil jet ❶.

Guideline

| | | | |
|---|---|---|---|
| Oil jet, piston cooling | M6x0.75 | 4 Nm<br>(3 lbf ft) | **Loctite® 243™** |

– Mount the dowels.
– Blow compressed air through all oil channels and check that they are clear.
– Measure the spring length of the oil pressure regulator valve.

| | |
|---|---|
| Oil pressure regulator valve - minimum spring length | 25.36 mm (0.9984 in) |

» If the measured value does not equal the specified value:
  – Change the spring.

– Check the piston valve for damage and wear.
» If there is damage or wear:
  – Replace the piston valve.

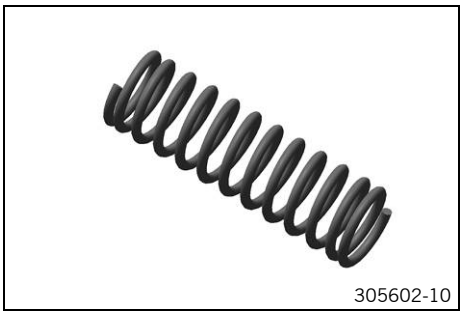
305602-10

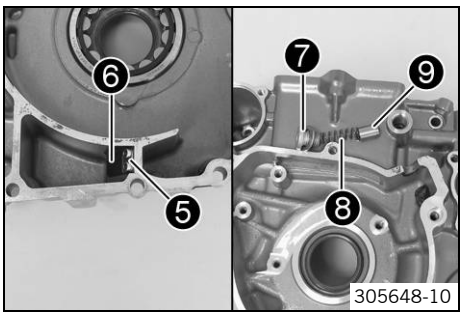

305648-10

– Lubricate piston valve ❾ and mount it with pressure spring ❽. Mount and tighten screw plug ❼ with the new seal ring.

Guideline

| | | |
|---|---|---|
| Oil pressure regulator valve plug | M12x1.5 | 20 Nm<br>(14.8 lbf ft) |

– Position the membrane support plate ❺ with membrane ❻. Mount and tighten the screws.

Guideline

| | | | |
|---|---|---|---|
| Screw, membrane fixation | M3 | 2 Nm<br>(1.5 lbf ft) | **Loctite® 243™** |

**Info**
The membrane support plate is curved and must point away from the membrane.
An incorrectly installed membrane support plate results in loss of performance and increased oil consumption or leaks.
Do not apply thread locker between the membrane and the membrane support plate since this would impair their function.

## 16.4.3 Work on the clutch cover

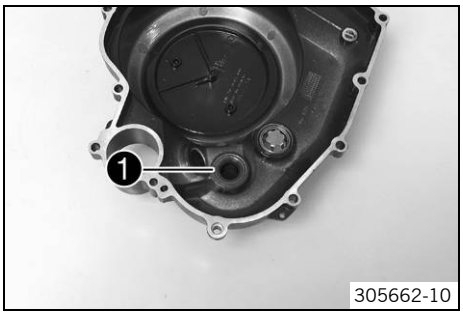


- Remove the shaft seal ring ❶ of the crankshaft.
- Press in a new shaft seal ring with the open side facing inward until it stops.

**Info**
Support the clutch cover sufficiently when pressing in.

- Blow compressed air through the oil channel and check that it is clear.

## 16.4.4 Removing crankshaft bearing inner ring

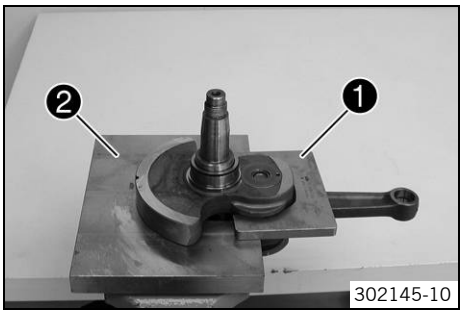


- Fix the crankshaft with special tools ❶ and ❷ in the vise.

| |
|---|
| Upper part, pressing-out tool (75029047050) (☛ p. 234) |
| Under part, pressing-out tool (75029047051) (☛ p. 235) |

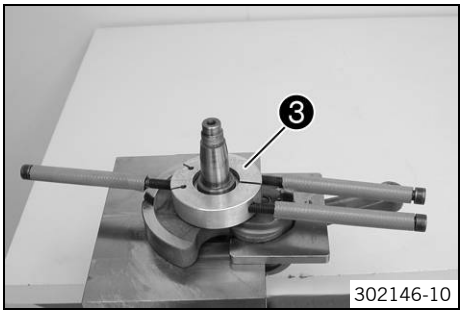


- Heat the special tool ❸.
  Guideline

| |
|---|
| 150 °C (302 °F) |

| |
|---|
| Tool for inner bearing race (58429037043) (☛ p. 229) |

- Push the heated special tool ❸ on to the inner bearing race, press them hard together, and pull them together off the crankshaft.
- Take off the compensation shim.
- Repeat the operation on the opposite side.

## 16.4.5 Removing balancer shaft drive wheel

**Preparatory work**
- Remove the crankshaft bearing inner ring. (☛ p. 128)

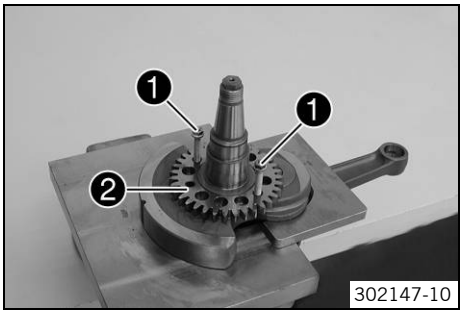


**Main work**
- Screw in 2 M6 screws ❶ in the threads. Tighten the two screws evenly to pull the drive wheel ❷ off the crankshaft.

## 16.4.6 Changing the connecting rod, conrod bearing, and crank pin

**Preparatory work**
- Remove the crankshaft bearing inner ring. (☛ p. 128)
- Remove the drive wheel of the balancer shaft. (☛ p. 128)

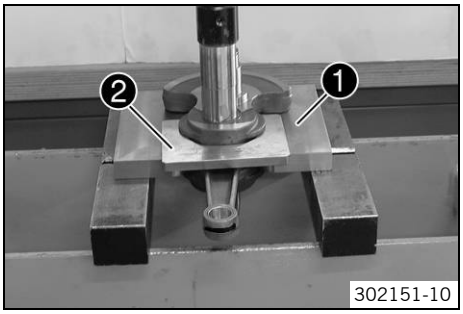

302151-10

**Main work**

– Position the crankshaft with special tool ❶ in the press.

| |
|---|
| Under part, pressing-out tool (75029047051) (☛ p. 235) |

– Position special tool ❷ between the crankwebs.

| |
|---|
| Upper part, pressing-out tool (75029047050) (☛ p. 234) |

– Press the crank pin out of the upper crankweb with the push-out drift of the special tool.

| |
|---|
| Pressing device for crankshaft, complete (75029047000) (☛ p. 234) |

**Info**
Hold the lower crankweb.

– Take off the connecting rod and bearing.
– Press the crank pin out of the crankweb.

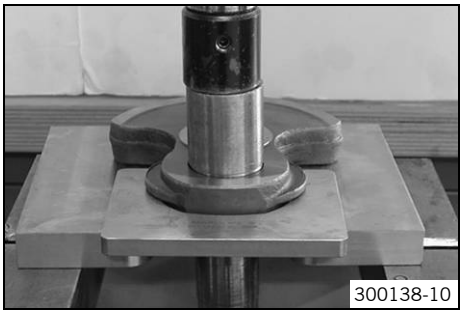
300138-10

– Press in the new crank pin ❸ as far as possible.

**Info**
The crank pin must be pressed in so that oil channel Ⓐ is aligned with oil channel Ⓑ.
If the oil channels are not correctly aligned, the conrod bearing will not be supplied with oil.

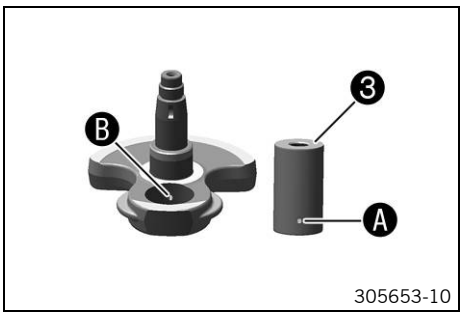

305653-10

– Blow compressed air through the oil channel to check that it is clear.

– Mount bearing ❹ and connecting rod ❺.

**Info**
Thoroughly lubricate the bearing.

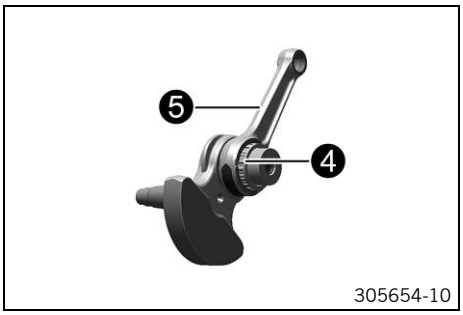

305654-10

– Position special tool ❻ on the press.

| |
|---|
| Pressing device for crankshaft, complete (75029047000) (☛ p. 234) |

– Place the crankweb in with the connecting rod and the bearing. Position the second crankweb.

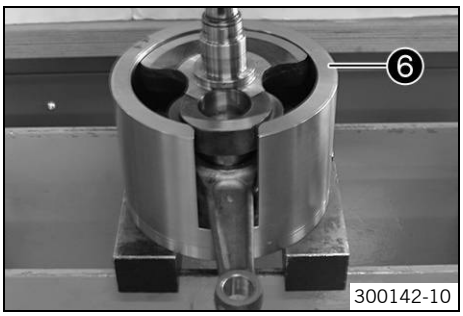

300142-10

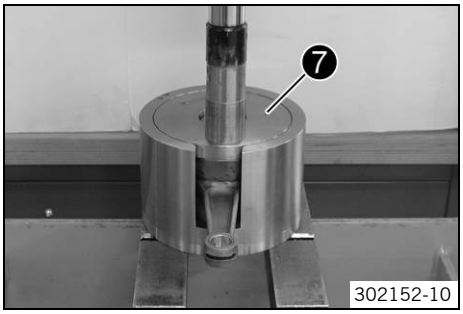


– Position special tool ❼ with the heel at the bottom.

| |
|---|
| Pressing device for crankshaft, complete (75029047000) (☛ p. 234) |

– Press the upper crankweb in as far as possible.

**Info**
The press mandrel must be applied above the crank pin.

– Take the crankshaft out of the special tool, and check the connecting rod for freedom of movement.

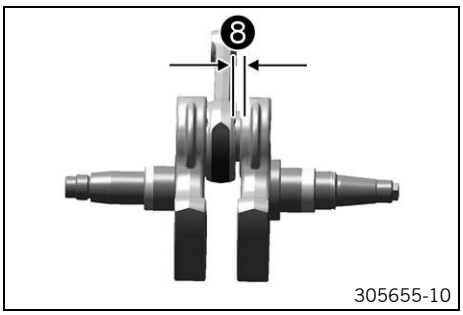


– Measure axial play ❽ between the connecting rod and the crankwebs using the special tool.

| |
|---|
| Feeler gauge (59029041100) (☛ p. 230) |

| | |
|---|---|
| Connecting rod - axial clearance of lower conrod bearing | 0.30… 0.60 mm (0.0118… 0.0236 in) |

» If the specification is not reached:
  – Correct until it complies with the specified value.

**Finishing work**
– Check the crankshaft run-out at the bearing pin. (☛ p. 130)
– Install the drive wheel of the balancer shaft. (☛ p. 130)
– Install the crankshaft bearing inner ring. (☛ p. 131)
– Measure the axial clearance of the crankshaft and the balancer shaft. (☛ p. 131)

## 16.4.7 Checking crankshaft run-out at bearing pin

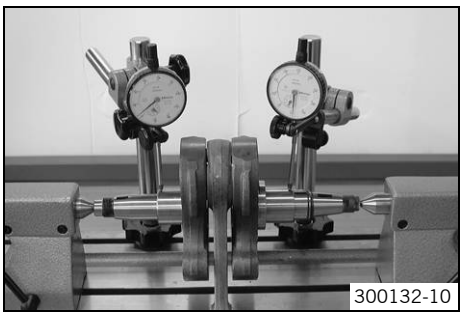


– Position the crankshaft on a roller block.
– Rotate the crankshaft slowly.
– Check the crankshaft run-out at both bearing pins.

| | |
|---|---|
| Crankshaft run-out at bearing pin | ≤ 0.10 mm (≤ 0.0039 in) |

» If the crankshaft run-out at the bearing pin is greater than the specified value:
  – Align the crankshaft.

## 16.4.8 Installing balancer shaft drive wheel

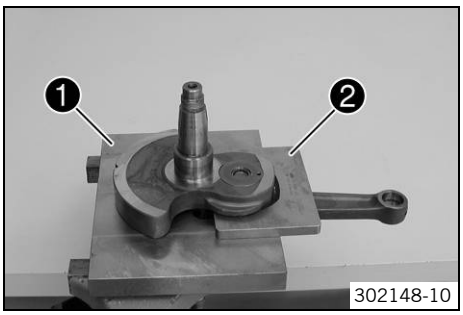


**Main work**
– Fix the crankshaft with special tools ❶ and ❷ in the vise.

| |
|---|
| Upper part, pressing-out tool (75029047050) (☛ p. 234) |
| Under part, pressing-out tool (75029047051) (☛ p. 235) |

– Warm the drive wheel.
Guideline

| |
|---|
| 100 °C (212 °F) |

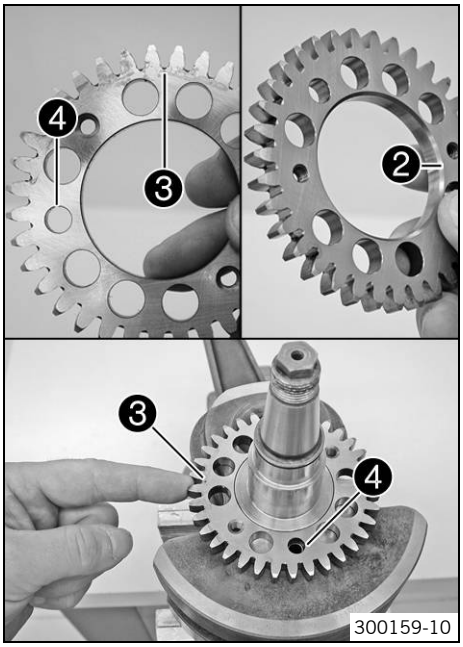


– Place the drive wheel on the crankshaft.
  ✓ The dowel of the crankshaft must fit in the drill hole ❹.
  ✓ The side of the drive wheel with the punch mark ❸ must be visible after assembly, and the side with the bevel ❷ must be in contact with the crankweb.

**Finishing work**
– Install the crankshaft bearing inner ring. (☛ p. 131)
– Measure the axial clearance of the crankshaft and the balancer shaft. (☛ p. 131)

## 16.4.9 Installing crankshaft bearing inner ring

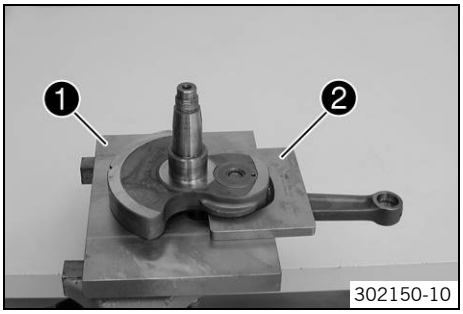


**Main work**
– Fix the crankshaft with special tools ❶ and ❷ in the vise.

| |
|---|
| Upper part, pressing-out tool (75029047050) (☛ p. 234) |
| Under part, pressing-out tool (75029047051) (☛ p. 235) |

– Push on the compensation shim.
– Heat the special tool. Install the inner bearing race.
  Guideline

| |
|---|
| 120 °C (248 °F) |

– Repeat the operation on the opposite side.
– Make sure that the new inner bearing race is installed flush.

**Info**
After changing the crankshaft bearing and the conrod bearing, measure the axial play of the crankshaft.

**Finishing work**
– Measure the axial clearance of the crankshaft and the balancer shaft. (☛ p. 131)

## 16.4.10 Measuring axial clearance of crankshaft and balancer shaft

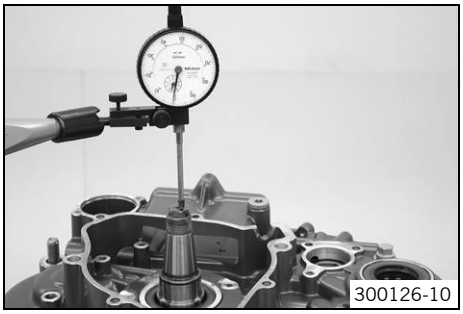


– Insert the crankshaft and balancer shaft in the right engine casing.

**Info**
Do not forget the dowels.

– Mount the left engine casing.
– Mount and tighten the screws.
  Guideline

| | | |
|---|---|---|
| Screw, engine case | M6 | 10 Nm (7.4 lbf ft) |

– Mount the dial gauge support on the engine case and measure and note the axial clearance of the crankshaft.
  Guideline

| | |
|---|---|
| Crankshaft - axial clearance | 0.15… 0.25 mm (0.0059… 0.0098 in) |

» If the measured value does not equal the specified value:
- Remove the crankshaft.
- Remove the crankshaft bearing inner ring. (☛ p. 128)
- Calculate the thickness of the compensation shims.
- Add or remove compensation shims equally on both sides.

**Info**
If the axial clearance is too small, remove compensation shims.
If the axial clearance is too large, add compensation shims.

- Install the crankshaft bearing inner ring. (☛ p. 131)

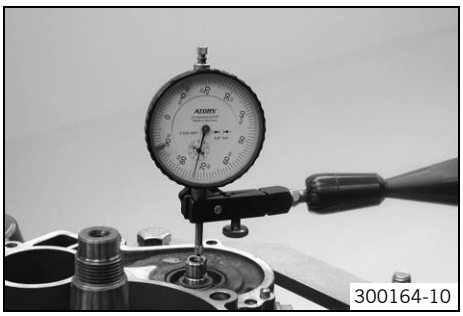
300164-10

- Mount the dial gauge support on the engine case and measure and note the axial clearance of the balancer shaft.

Guideline

| | |
|---|---|
| Balancer shaft axial clearance | 0.05… 0.20 mm (0.002… 0.0079 in) |

» If the measured value does not equal the specified value:
- Remove the balancer shaft.
- Calculate the thickness of the compensation shims.
- Add compensation shims to the ignition side only.

**Info**
If the axial clearance is too small, remove compensation shims.
If the axial clearance is too large, add compensation shims.

## 16.4.11 Cylinder - Nikasil® coating

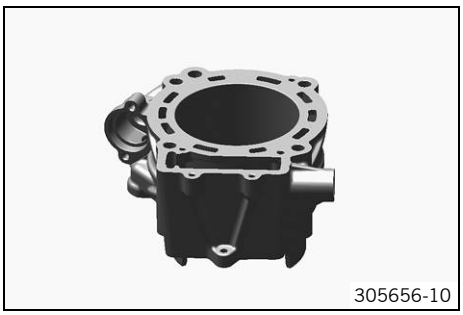
305656-10

**Nikasil®** is a surface protection layer for a coating method developed by the Mahle company. The name is derived from the two materials used in this method - a layer of nickel, in which silicon carbide (a particularly hard substance) is embedded.
The most important advantages of the **Nikasil®** coating are the excellent heat conductivity resulting in better performance, less wear, and low cylinder weight.

## 16.4.12 Checking/measuring the cylinder

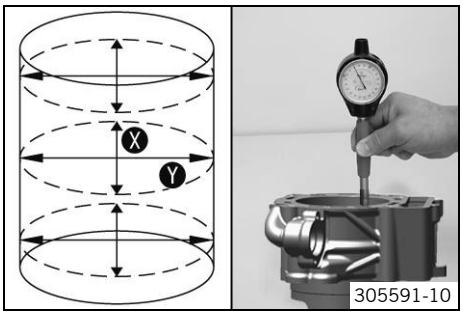

305591-10

- Check the O-ring of the chain adjuster for damage and wear.
  » If there is damage or wear:
  - Change the O-ring.
- Check the cylinder bearing surface for damage.
  » If the cylinder bearing surface is damaged:
  - Change the cylinder and piston.
- Measure the cylinder diameter at several places in the Ⓧ and Ⓨ axes using a micrometer to check for oval wear.
- To determine the size, measure the cylinder at a distance Ⓑ from the top edge of the cylinder.

Guideline

| | |
|---|---|
| Distance Ⓑ | 55 mm (2.17 in) |
| Cylinder - bore diameter | |
| Size I | 102.000… 102.012 mm (4.01574… 4.01621 in) |
| Size II | 102.013… 102.025 mm (4.01625… 4.01672 in) |

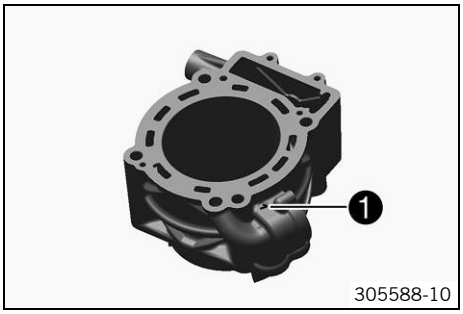

305588-10

– The cylinder size ❶ is marked on the side of the cylinder.

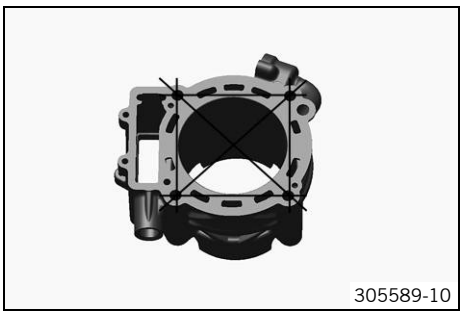
305589-10

– Check the sealing area of the cylinder head for distortion using a straight edge and the special tool.

| |
|---|
| Feeler gauge (59029041100) (☛ p. 230) |

| | |
|---|---|
| Cylinder/cylinder head - sealing area distortion | ≤ 0.10 mm (≤ 0.0039 in) |

» If the measured value does not equal the specified value:
  – Change the cylinder.

## 16.4.13 Checking/measuring the piston

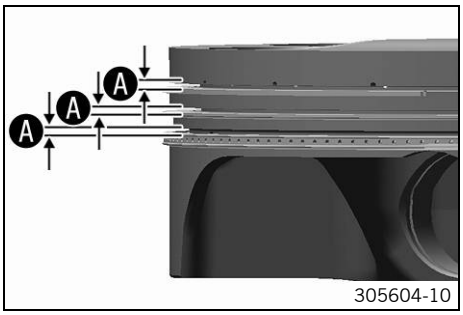

305604-10

– Use the special tool to measure play Ⓐ of the piston rings in the piston ring groove.

Guideline

| | |
|---|---|
| Piston ring - groove clearance | ≤ 0.08 mm (≤ 0.0031 in) |

| |
|---|
| Feeler gauge (59029041100) (☛ p. 230) |

» If play Ⓐ is greater than the specified value:
  – Change the piston and piston rings.
  – Check/measure the cylinder. (☛ p. 132)

305645-10

– Check the piston bearing surface for damage.
  » If the piston bearing surface is damaged:
    – Change the piston and, if necessary, the cylinder.
– Check that the piston rings can move easily in the piston ring grooves.
  » If the piston ring is stiff:
    – Clean the piston ring groove.

**Tip**
Use an old piston ring to clean the piston ring groove.

– Check the piston rings for damage.
  » If the piston ring is damaged:
    – Change the piston ring.

**Info**
Mount the piston ring with the marking facing upward.

– Check the piston pin for discoloration or signs of wear.
  » If the piston pin has strong discoloration/signs of wear:
    – Change the piston pin.
– Insert the piston pin into the connecting rod and check the bearing for play.
  » If the piston pin bearing has too much play:
    – Change the connecting rod and the piston pin.

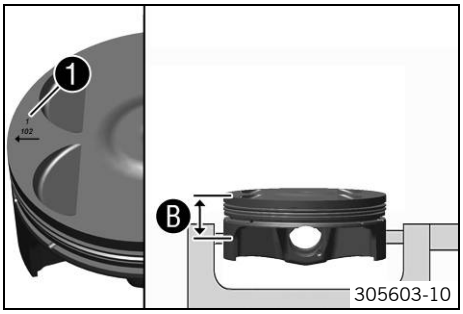


– Measure the piston at the piston skirt, at right angles to the piston pin, at a distance B.

Guideline

| | |
|---|---|
| Distance B | 31.5 mm (1.24 in) |
| Piston - diameter | |
| Size I | 101.955… 101.965 mm (4.01397… 4.01436 in) |
| Size II | 101.965… 101.975 mm (4.01436… 4.01476 in) |

**Info**
Piston size 1 is marked on the piston head.

## 16.4.14 Checking piston ring end gap

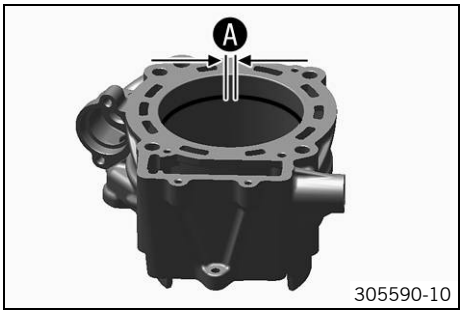


– Remove the piston ring from the piston.
– Place the piston ring in the cylinder and align it with the piston.

Guideline

| | |
|---|---|
| Under the upper edge of the cylinder | 10 mm (0.39 in) |

– Measure the end gap with a feeler gauge A.

Guideline

| | |
|---|---|
| Piston ring end gap | |
| Compression rings | ≤ 0.80 mm (≤ 0.0315 in) |
| Oil scraper ring | ≤ 1.00 mm (≤ 0.0394 in) |

» If the end gap is more than the specified value:
  – Check/measure the cylinder. (☛ p. 132)
» If the cylinder wear is within the tolerance range:
  – Change the piston ring.
– Mount the piston ring with the marking facing toward the piston head.

## 16.4.15 Determining the piston/cylinder mounting clearance

– Check/measure the cylinder. (☛ p. 132)
– Check/measure the piston. (☛ p. 133)
– The smallest piston/cylinder mounting clearance is the result of the smallest cylinder bore diameter minus the largest piston diameter. The largest piston/cylinder mounting clearance is the result of the largest cylinder bore diameter minus the smallest piston diameter.

Guideline

| | |
|---|---|
| Piston/cylinder - mounting clearance | |
| New condition | 0.035… 0.060 mm (0.00138… 0.00236 in) |
| Wear limit | 0.10 mm (0.0039 in) |

## 16.4.16 Checking the oil pumps for wear

**Info**
The oil pump wear check shown here is on the suction pump but it applies to all oil pumps.

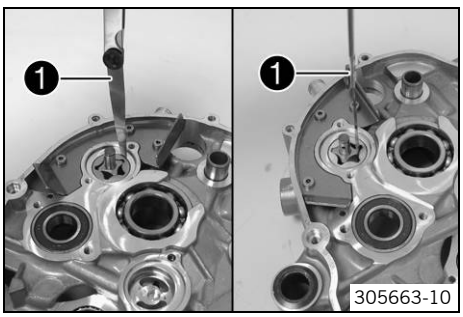


– Use a feeler gauge 1 to measure the play between the external rotor and the engine case as well as between the external rotor and the internal rotor.

| | |
|---|---|
| Oil pump | |
| Clearance between external rotor and engine case | ≤ 0.20 mm (≤ 0.0079 in) |
| Clearance between external rotor and internal rotor | ≤ 0.20 mm (≤ 0.0079 in) |
| Axial clearance | 0.04… 0.08 mm (0.0016… 0.0031 in) |

» If the measured value does not meet specifications:
– Change the oil pump and, if necessary, the engine case.

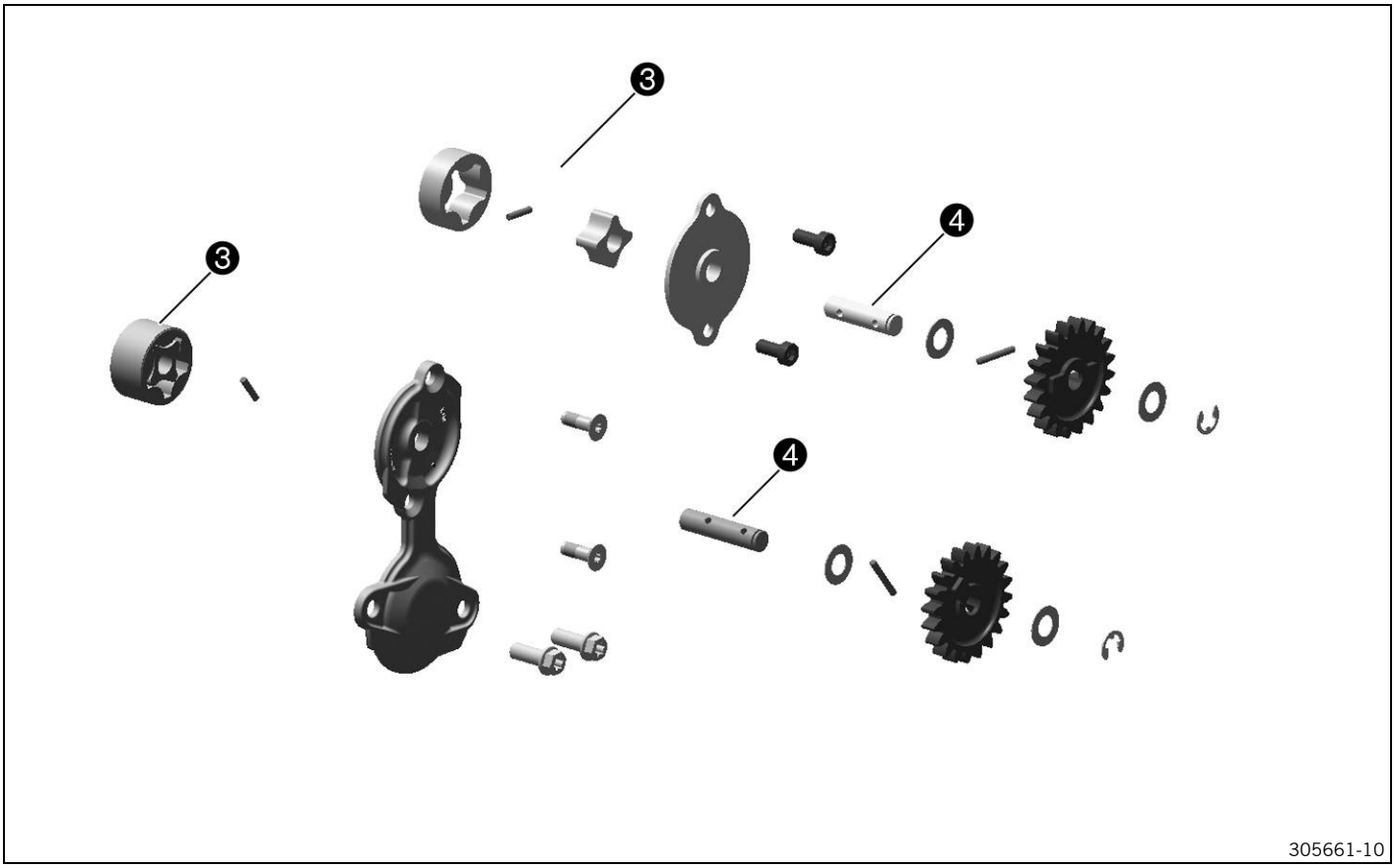


– Check the internal rotor and external rotor of oil pumps ❸ for damage and wear.
» If there is damage or wear:
– Change the oil pumps.
– Check oil pump shafts ❹ for damage and wear.
» If there is damage or wear:
– Change the oil pump shaft.
– Check both oil pump covers for damage and wear.
» If there is damage or wear:
– Change the oil pump cover.

## 16.4.17 Replacing autodecompressor

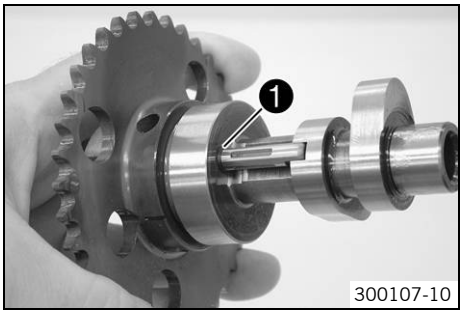


– Take the lock ring ❶ off the autodecompression shaft and dispose of it.

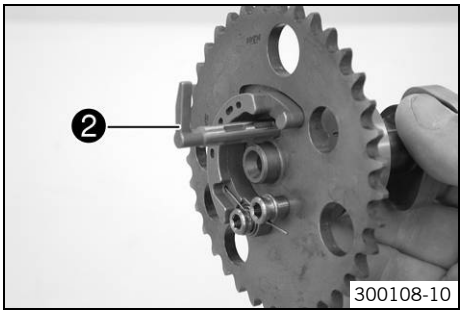


– Pull the autodecompression shaft ❷ from the camshaft.

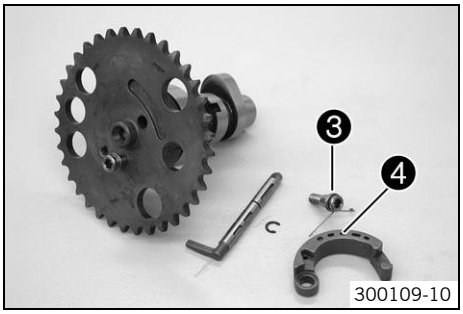


– Disconnect the autodecompression spring. Loosen the screw ❸ and remove it together with the autodecompression spring and the autodecompression weight ❹.

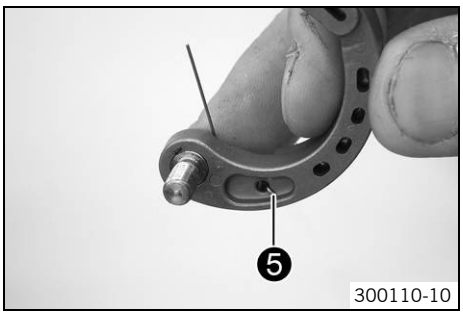


– When assembling, first connect the autodecompression spring and then insert the screw through the autodecompression weight.

✔ The arm of the autodecompression spring ❺ is long enough to pass right through the autodecompression weight.

– Position the autodecompression weight. Mount and tighten screw ❸. Reconnect the autodecompression spring.

Guideline

| | | | |
|---|---|---|---|
| Screw, autodecompression | M6 | 3… 4 Nm (2.2… 3 lbf ft) | **Loctite® 243™** |

– Mount the autodecompression shaft in the camshaft. Install a new lock ring.
– Check the functioning.
  » If the autodecompression spring does not completely retract the autodecompression shaft:
    – Replace the autodecompression spring.

## 16.4.18 Preparing timing chain tensioner for installation

– Fully compress the timing chain tensioner.

**Info**
This requires considerable force since the oil has to be pressed out.

– Release the timing chain tensioner.

✔ Without pressure, the timing chain tensioner expands fully.

– Place two compensating disks or similar aids next to the piston of the timing chain tensioner. This should ensure that when pushed down, the piston does not fully withdraw.

Guideline

| | |
|---|---|
| Thickness of the compensating disks | 2… 2.5 mm (0.08… 0.098 in) |

– Release the timing chain tensioner.

✔ The latching system locks and the piston stops moving.

| | |
|---|---|
| End position of piston after latching | 3 mm (0.12 in) |

**Info**
This position is necessary for installation.
If the timing chain tensioner is now pressed in once more (while it is installed) and then pulled out no more than halfway (preventing it from coming out fully), the latching system locks and the timing chain tensioner can no longer be compacted; this function is necessary to ensure sufficient tension of the timing chain, even at low oil pressure.

## 16.4.19 Checking the timing assembly

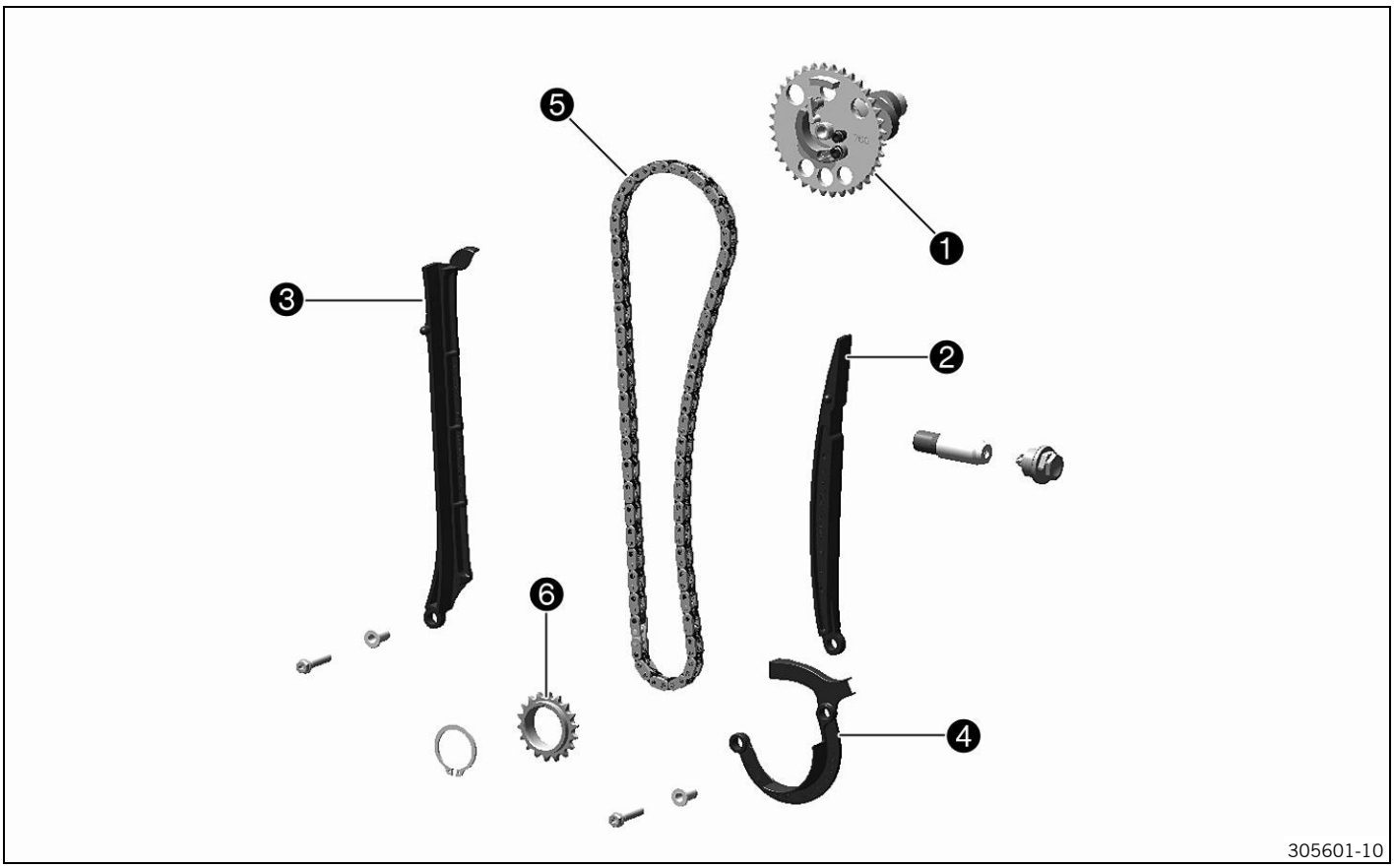


- Clean all parts well.
- Check timing chain gear ❶ for damage and wear.
  - » If there is damage or wear:
    - Change the timing chain gear/timing chain sprocket.
- Check timing chain tensioning rail ❷ for damage and wear.
  - » If there is damage or wear:
    - Change the timing chain tensioning rail.
- Check timing chain guide rail ❸ for damage and wear.
  - » If there is damage or wear:
    - Change the timing chain guide rail.
- Check timing chain securing guide ❹ for damage and wear.
  - » If there is damage or wear:
    - Change the timing chain securing guide.
- Check timing chain ❺ for damage and wear.
  - » If there is damage or wear:
    - Change the timing chain.
- Check that the timing chain links move easily. Let the timing chain hang down freely.
  - » If the chain links no longer straighten out:
    - Change the timing chain.
- Check timing chain sprocket ❻ for damage and wear.
  - » If there is damage or wear:
    - Change the timing chain gear/timing chain sprocket.

## 16.4.20 Removing the rocker arm

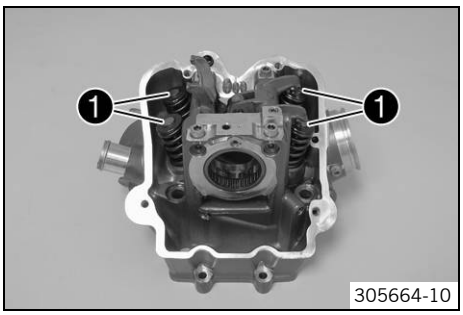


– Take shims ❶ out of the valve spring retainers and lay them to one side according to their normal built-in position.

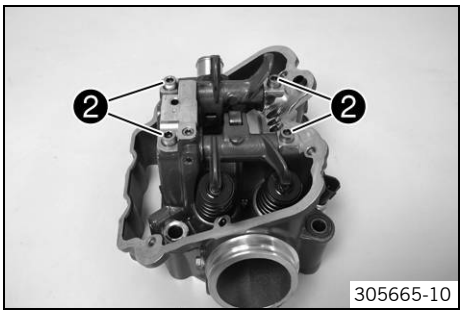


– Remove screws ❷.

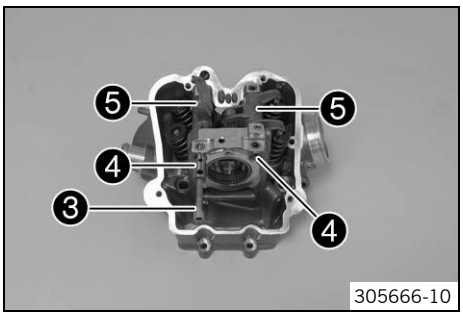


– Screw a suitable screw ❸ into the rocker arm shafts ❹. Pull out the rocker arm shafts.
– Take off rocker arm ❺.

## 16.4.21 Changing the camshaft bearing

**Preparatory work**

– Remove the rocker arm. (☛ p. 138)

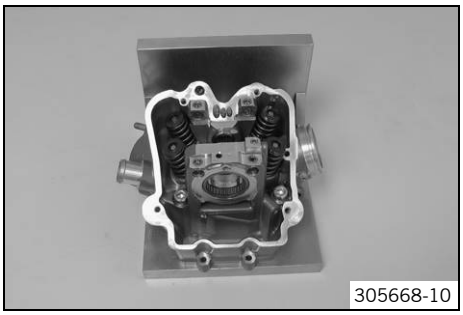


**Main work**

– Mount the cylinder head on the special tool.

| |
|---|
| Clamping plate (75029050000) (☛ p. 235) |

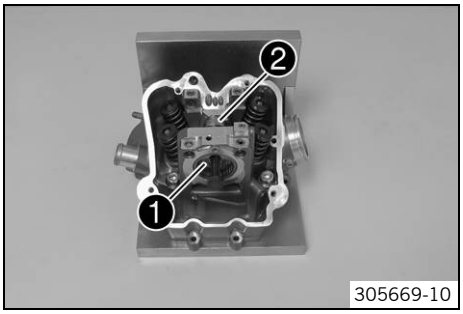


– Remove the large camshaft bearing using special tool ❶.

| |
|---|
| Push-out drift (75029051000) (☛ p. 235) |

**Info**

Brace the back of the special tool with a suitable tool ❷.

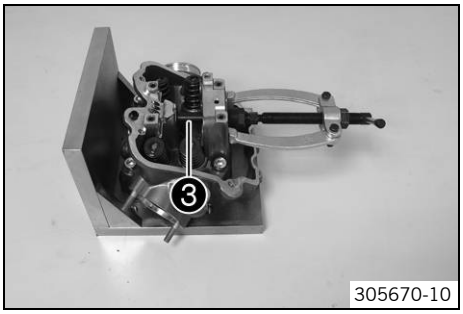

305670-10

– Remove the small camshaft bearing using special tool ❸.

| |
|---|
| Insert for bearing puller (15112018100) (☛ p. 228) |
| Bearing puller (15112017000) (☛ p. 228) |

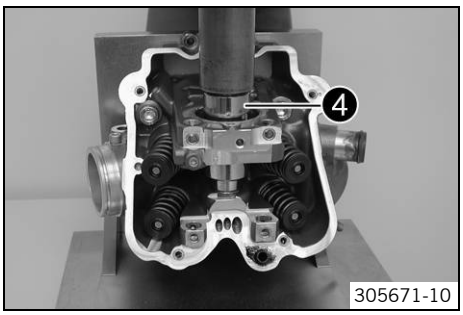

305671-10

– Press in the small camshaft bearing as far as possible using special tool ❹.

| |
|---|
| Push-in drift (75029044020) (☛ p. 234) |

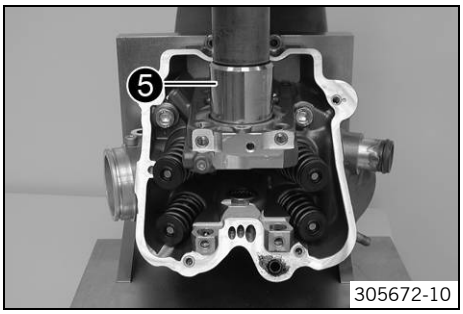

305672-10

– Press in the large camshaft bearing as far as possible using special tool ❺.

| |
|---|
| Push-in drift (75029044010) (☛ p. 234) |

**Finishing work**

– Install the rocker arm. (☛ p. 142)

## 16.4.22 Removing the valves

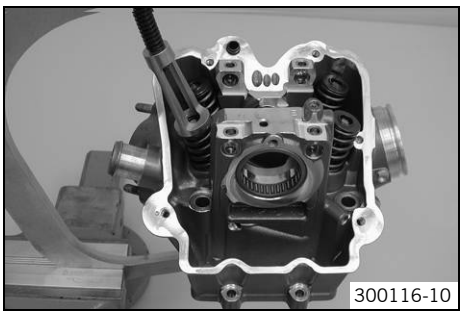
300116-10

– Pretension the valve springs using the special tool.

| |
|---|
| Valve spring compressor (59029019000) (☛ p. 230) |
| Valve spring mounting device (78029060000) (☛ p. 237) |

– Remove the valve keys and release the tension on the valve springs.
– Remove the spring retainer and spring.
– Pull the valve down and out of the valve guide, and remove the valve stem seal and valve spring seat.

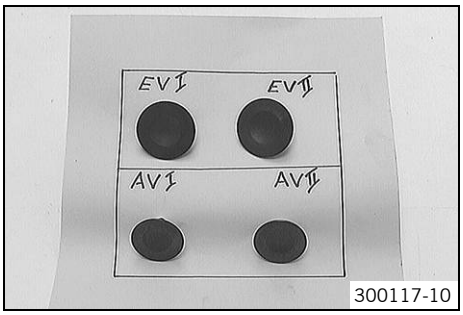

300117-10

– Mark the valves according to their normal built-in position.

**Info**
Place the valves into a box according to the installation position and label the box.

## 16.4.23 Checking the valves

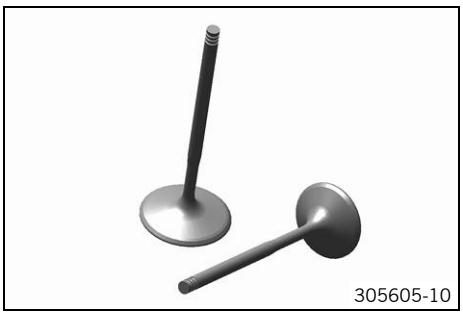
305605-10

– Check the run-out at the valve plate.

| Valve - run-out | |
|---|---|
| On the valve plate | ≤ 0.05 mm (≤ 0.002 in) |

» If the measured value does not equal the specified value:
  – Change the valve.

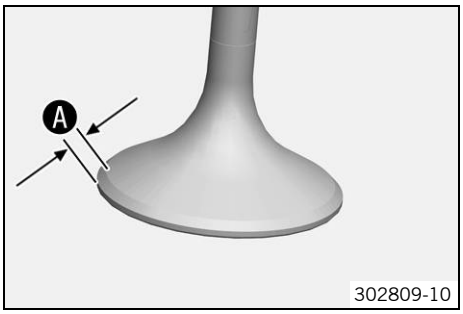

302809-10

– Check sealing seat A on the valve.

| Valve - sealing seat width | |
|---|---|
| Intake | 1.60 mm (0.063 in) |

| Valve - sealing seat width | |
|---|---|
| Exhaust | 2.00 mm (0.0787 in) |

» If the sealing area is not in the center of the valve seat or deviates from the specified value:
  – Machine the valve seat.

## 16.4.24 Checking valve springs

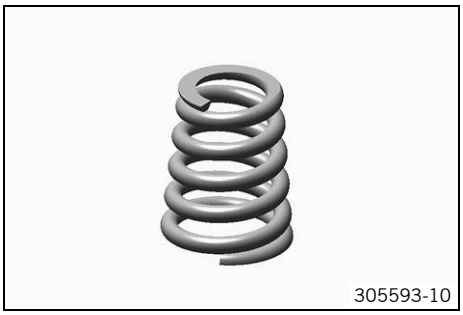
305593-10

– Check the valve springs for fractures and wear (visual check).
  » If the valve spring is fractured or worn:
    – Change the valve spring.
– Measure the valve spring lengths.

| Valve spring | |
|---|---|
| Minimum length (without valve spring cap) | 42.3 mm (1.665 in) |

» If the measured value does not equal the specified value:
  – Change the valve spring.

## 16.4.25 Checking valve spring retainer

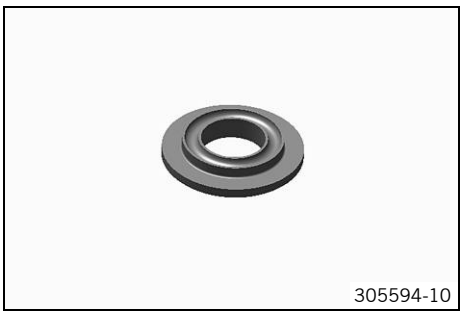
305594-10

– Check the valve spring retainer for fractures and wear (visual check).
  » If the valve spring retainer is fractured or worn:
    – Change the valve spring retainer.
– Measure the thickness of the valve spring retainer.

| Valve spring cap - thickness | 2.4… 2.5 mm (0.094… 0.098 in) |
|---|---|

» If the measured value does not equal the specified value:
  – Change the valve spring retainer.

## 16.4.26 Checking the cylinder head

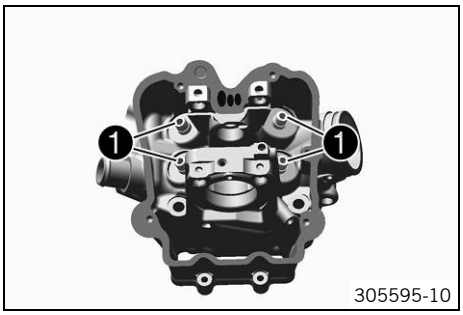

305595-10

– Check valve guides 1 with the special tool.

| Limit plug gauge (59029026006) (☛ p. 230) |
|---|

» If the special tool is easy to insert into the valve guide:
  – Change the valve guide and valve.
– Check the sealing area of the spark plug thread and the valve seats for damage and cracking.
  » If there is damage or cracking:
    – Change the cylinder head.

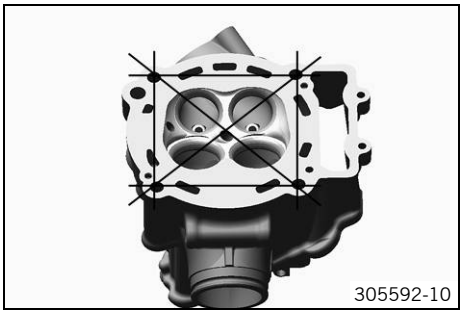
305592-10

– Check the sealing area of the cylinder for distortion using a straight edge and the special tool.

| |
|---|
| Feeler gauge (59029041100) (☛ p. 230) |

| | |
|---|---|
| Cylinder/cylinder head - sealing area distortion | ≤ 0.10 mm (≤ 0.0039 in) |

» If the measured value does not equal the specified value:
  – Change the cylinder head.

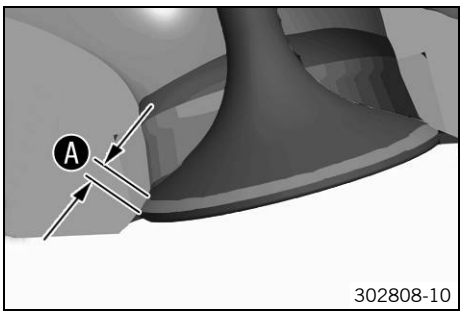

302808-10

– Check sealing seat A of the valves.

| | |
|---|---|
| Valve - sealing seat width | |
| Intake | 1.60 mm (0.063 in) |

| | |
|---|---|
| Valve - sealing seat width | |
| Exhaust | 2.00 mm (0.0787 in) |

» If the measured value does not equal the specified value:
  – Machine the valve seat.

– Blow compressed air through all oil channels and check that they are clear.

## 16.4.27 Installing the valves

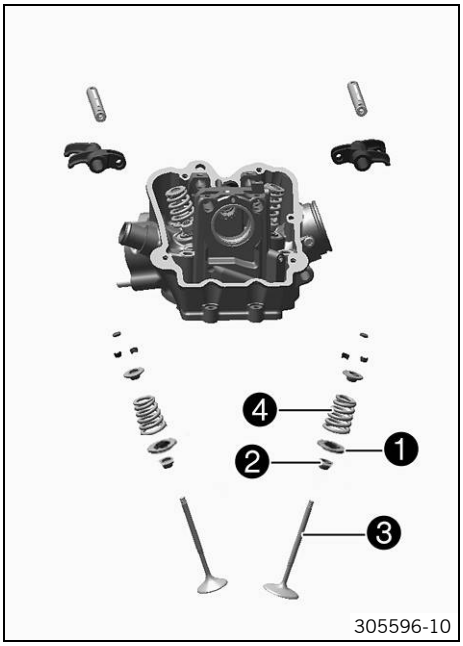

305596-10

– Position the valve spring seat 1. Mount the new valve stem seals 2.
– Mount valves 3 according to their normal built-in position.
– Mount valve springs 4 and the spring retainers.

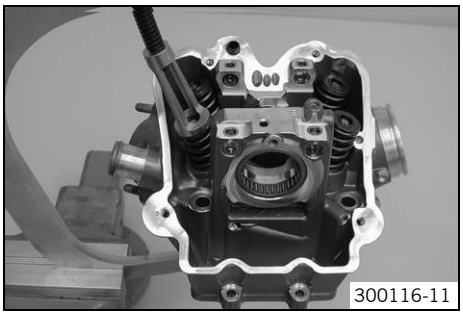
300116-11

– Pretension the valve springs using the special tool.

| |
|---|
| Valve spring compressor (59029019000) (☛ p. 230) |
| Valve spring mounting device (78029060000) (☛ p. 237) |

– Mount the valve keys.

**Info**
When mounting the valve keys, check that they are seated correctly; preferably, fix the valve keys to the valve with a little grease.

## 16.4.28 Installing the rocker arm

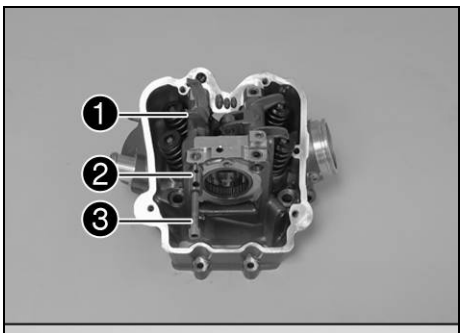


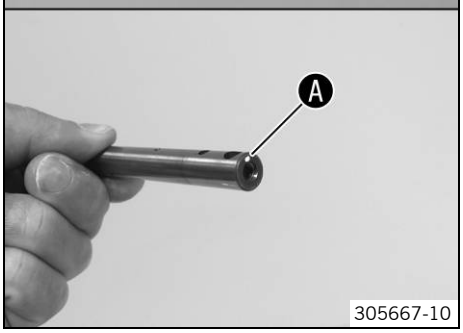


– Position rocker arm ❶ and push in the rocker arm shafts ❷.

> **Info**
> Make sure that the tapped hole of the rocker arm shaft is facing outward. The small drill hole Ⓐ and the flat surface must face upward.

– Remove screw ❸.

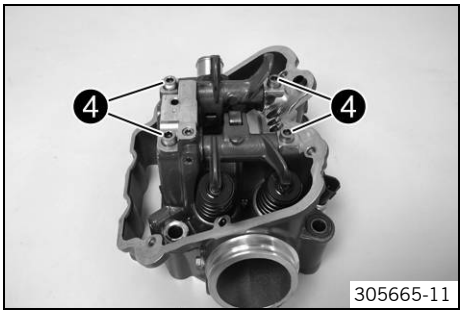


– Mount and tighten screws ❹.

Guideline

| | | |
|---|---|---|
| Screw, rocker arm shaft | M6x30 | 12 Nm (8.9 lbf ft) |

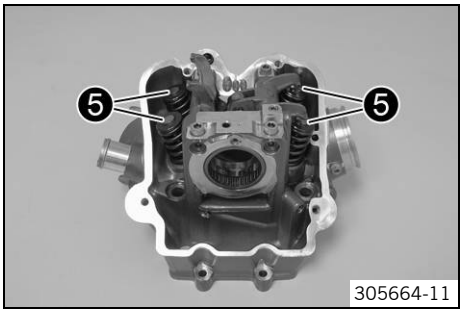


– Place shims ❺ into the valve spring retainers according to their normal built-in position.

## 16.4.29 Disassembling the antihopping clutch

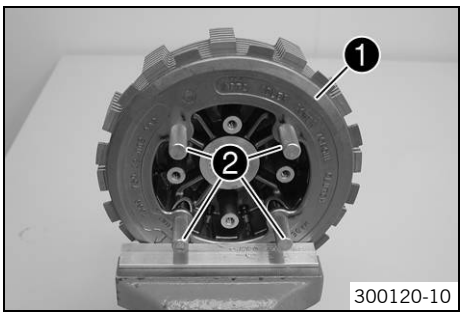


– Clamp the clutch ❶ in a vise.

> **Info**
> Use soft jaws.

– Carefully loosen and gradually remove the special tool ❷.

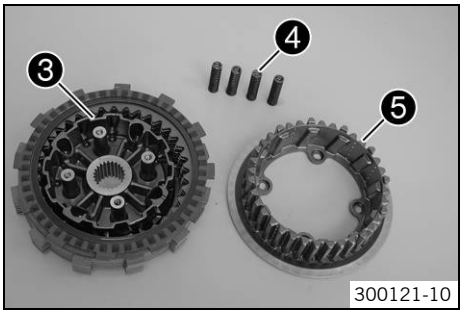


- Take the clutch out of the vise and lay it on a clean workbench with the outer clutch hub ❺ facing down.
- Take the inner clutch hub ❸ and release springs ❹ out of the outer clutch hub ❺.

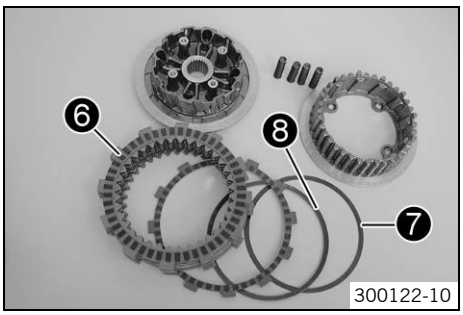


- Take off the clutch facing discs ❻ from the inner clutch hub.
- Remove pretension ring ❼ and support ring ❽.
- Clean all parts well.
- Check the clutch. (☛ p. 143)

## 16.4.30 Checking the clutch

**Preparatory work**

- Disassemble the antihopping clutch. (☛ p. 142)

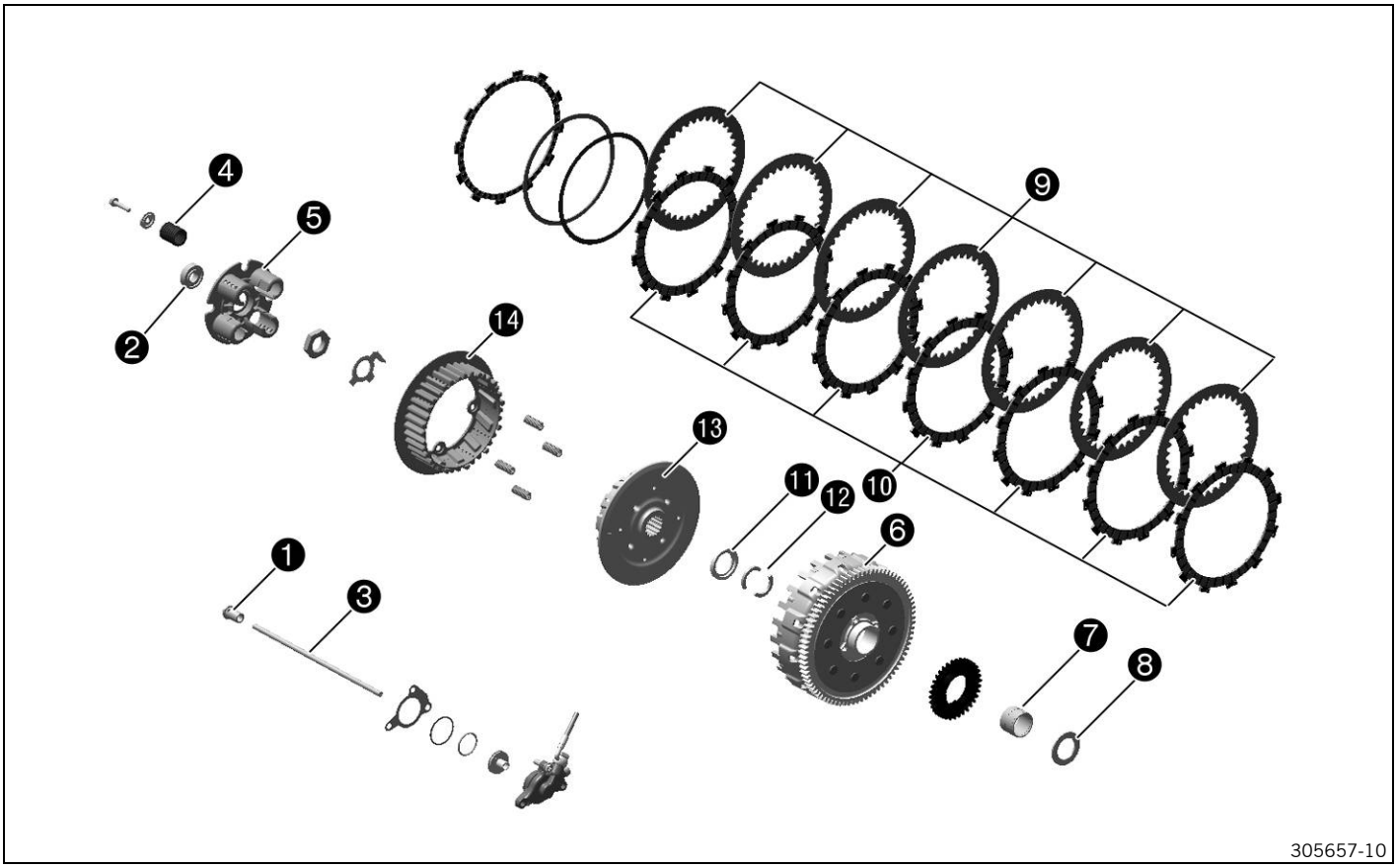


**Main work**

- Check pressure piece ❶ for damage and wear.
  - » If there is damage or wear:
    - Change the pressure piece.
- Check axial bearing ❷ for damage and wear.
  - » If there is damage or wear:
    - Change the axial bearing.

- Place push rod ❸ on a level surface and check it for run-out.
  - » If there is run-out:
    - – Change the push rod.
- Check the length of clutch springs ❹.

| | |
|---|---|
| Clutch spring - length | 31.5... 33.5 mm (1.24... 1.319 in) |

  - » If the clutch spring length is less than the specified value:
    - – Change all clutch springs.
- Check the contact surface of pressure cap ❺ for damage and wear.
  - » If there is damage or wear:
    - – Change the pressure cap.
- Check the contact surfaces of the clutch facing discs in the clutch basket ❻ for wear.

| | |
|---|---|
| Clutch basket - contact surface of clutch facing discs | ≤ 0.5 mm (≤ 0.02 in) |

  - » If the contact surface is very worn:
    - – Change the clutch facing discs and the clutch basket.
- Check needle bearing ❼ and supporting plate ❽ for damage and wear.
  - » If there is damage or wear:
    - – Change the needle bearing and supporting plate.
- Check the intermediate clutch discs ❾ for damage and wear.
  - » If the intermediate clutch discs are not even or are pitted:
    - – Change all intermediate clutch discs.
- Check clutch facing discs ❿ for discoloration and scoring.
  - » If there is discoloration or scoring:
    - – Change all clutch facing discs.
- Check the thickness of clutch facing discs ❿.

| | |
|---|---|
| Clutch facing disc - thickness | ≥ 2.5 mm (≥ 0.098 in) |

  - » If the clutch facing disc does not meet specifications:
    - – Change all clutch facing discs.
- Check stepped washer ⓫ for damage and wear.
  - » If there is damage or wear:
    - – Change the stepped washer.
- Check half washers ⓬ for damage and wear.
  - » If there is damage or wear:
    - – Change the half washers.
- Check inner clutch hub ⓭ for damage and wear.
  - » If there is damage or wear:
    - – Change the inner clutch hub.
- Check the outer clutch hub ⓮ for damage and wear.
  - » If there is damage or wear:
    - – Change the outer clutch hub.

**Finishing work**

- Preassemble the antihopping clutch. (☛ p. 144)

## 16.4.31 Preassembling the antihopping clutch

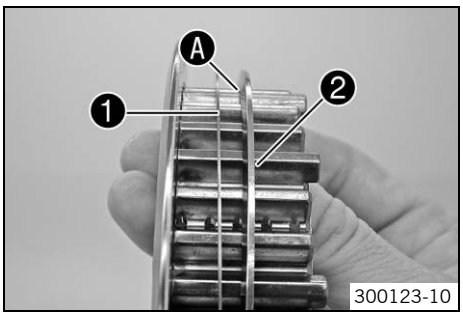


- Thoroughly oil the clutch facing discs.
- Push the support ring ❶ and the pretension ring ❷ on to the outer clutch hub.

**Info**
The pretension ring must be installed so that it is flush with the inner edge Ⓐ on the support ring.

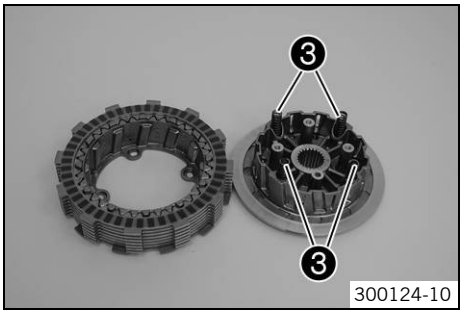


- Position the trimmed clutch facing disc with the recess for the pretension ring on the outer clutch hub.
- Beginning with the coated intermediate clutch disc, position all further clutch facing discs and intermediate clutch discs alternately.
- Position the release springs ❸.

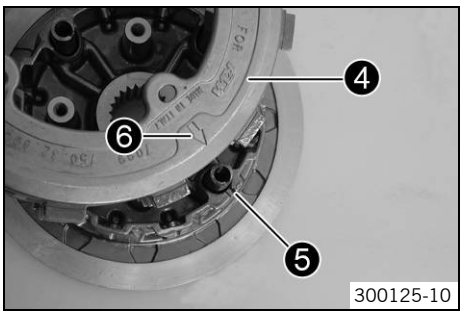


- Push on the outer clutch hub ❹ and pay attention to the markings.
  - ✔ The arrow ❻ of the outer clutch hub must point to the notch ❺ of the inner clutch hub.
- Push the two clutch hubs firmly together and have an assistant screw in the special tool.

| Assembly screws (75029033000) (☛ p. 233) |
|---|

**Info**
Apply the special tool with the hand only, do not use another tool.
Apply the special tool only firmly enough so that the clutch facing discs can still be turned against each other since they still have to be aligned for mounting in the clutch basket.

## 16.4.32 Checking the shift mechanism

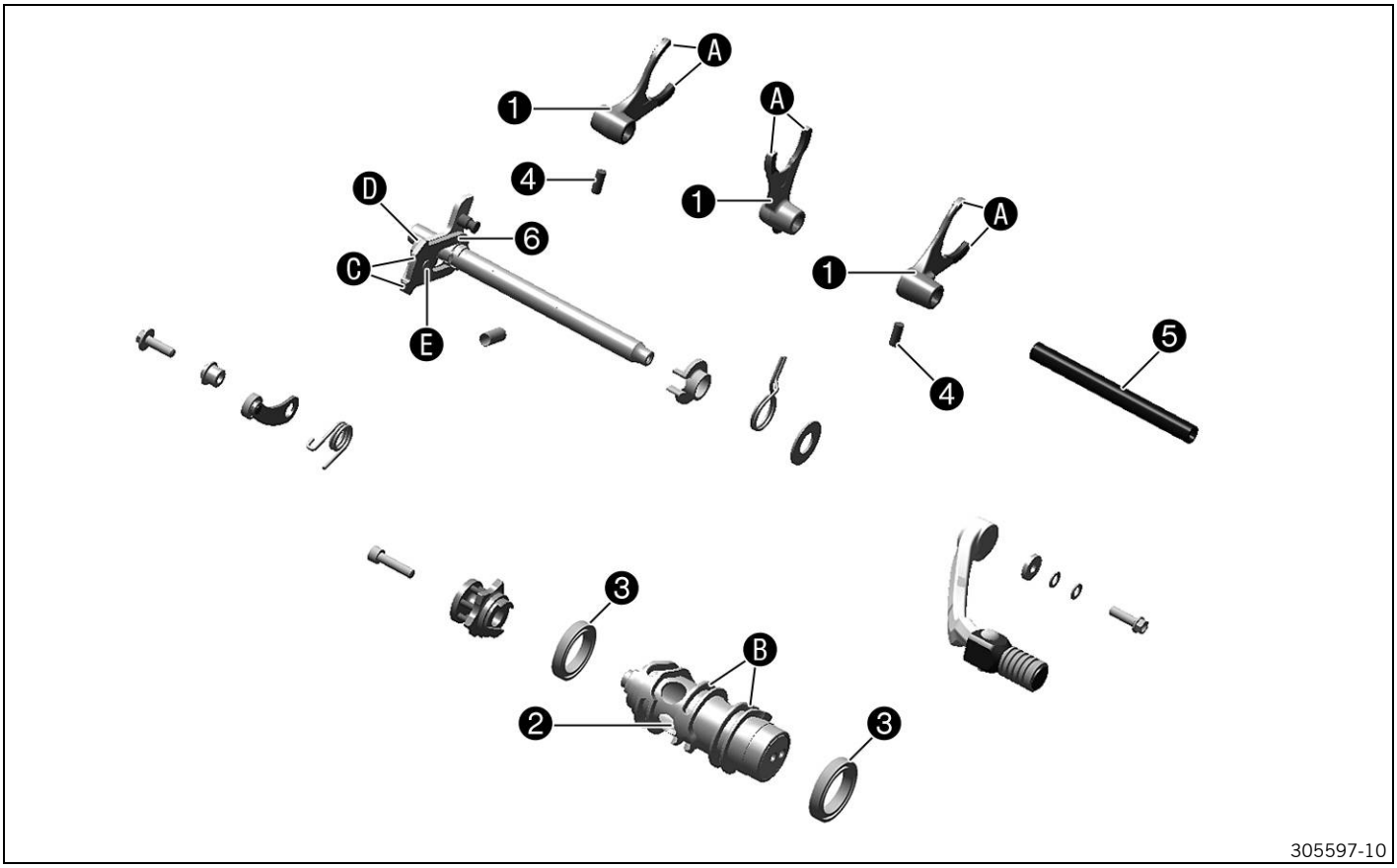


- Check shift forks ❶ (see Ⓐ) for damage and wear (visual check).
  - » If there is damage or wear:
    - Change the shift fork and gear wheel pair.
- Check shift grooves Ⓑ of shift drum ❷ for wear.
  - » If the shift groove is worn:
    - Change the shift drum.

- Check the seat of the shift drum in bearings ❸.
  - » If the shift drum is not seated correctly:
    - Change the shift drum and/or the bearing.
- Check bearing ❸ for stiffness and wear.
  - » If the bearings do not move freely or are worn:
    - Change the bearings.
- Check needle bushing ❹ for stiffness and wear.
  - » If the needle bushing does not move freely or is worn:
    - Change the needle bushing.
- Check shift rail ❺ on a flat surface for run-out.
  - » If there is run-out:
    - Change the shift rail.
- Check the shift rail for scoring, signs of corrosion, and stiffness in the shift forks.
  - » If there is scoring or corrosion, or if the shift fork is stiff:
    - Change the shift rail.
- Check sliding plate ❻ in contact areas Ⓒ for wear.
  - » If the sliding plate is worn:
    - Change the sliding plate.
- Check return surface Ⓓ on the sliding plate for wear.
  - » If deep notches are present:
    - Change the sliding plate.
- Check guide pin Ⓔ for looseness and wear.
  - » If the guide pin is loose and/or worn:
    - Change the sliding plate.
- Preassemble the shift shaft. (☛ p. 146)

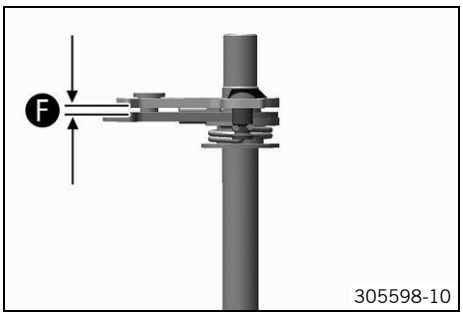


- Check play Ⓕ between the sliding plate and the shift quadrant.

| | |
|---|---|
| Shift shaft - play in sliding plate/shift quadrant | 0.40… 0.80 mm (0.0157… 0.0315 in) |

  - » If the measured value does not equal the specified value:
    - Change the sliding plate.

### 16.4.33 Preassembling the shift shaft

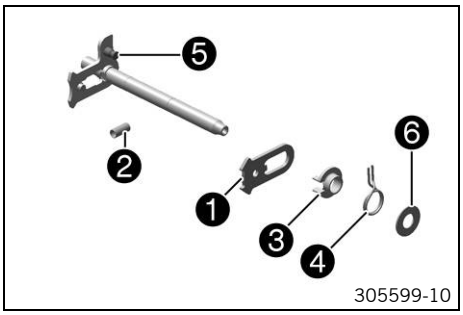


- Fix the short end of the shift shaft in a vise.

  Guideline

  | |
  |---|
  | Use soft jaws. |

- Mount sliding plate ❶ with the guide pin facing down and attach the guide pin to the shift quadrant.
- Mount pressure spring ❷.
- Push on spring guide ❸, push return spring ❹ over the spring guide with the offset end facing upward and lift the offset end over abutment bolt ❺.
- Mount stop disk ❻.

## 16.4.34 Disassembling the main shaft

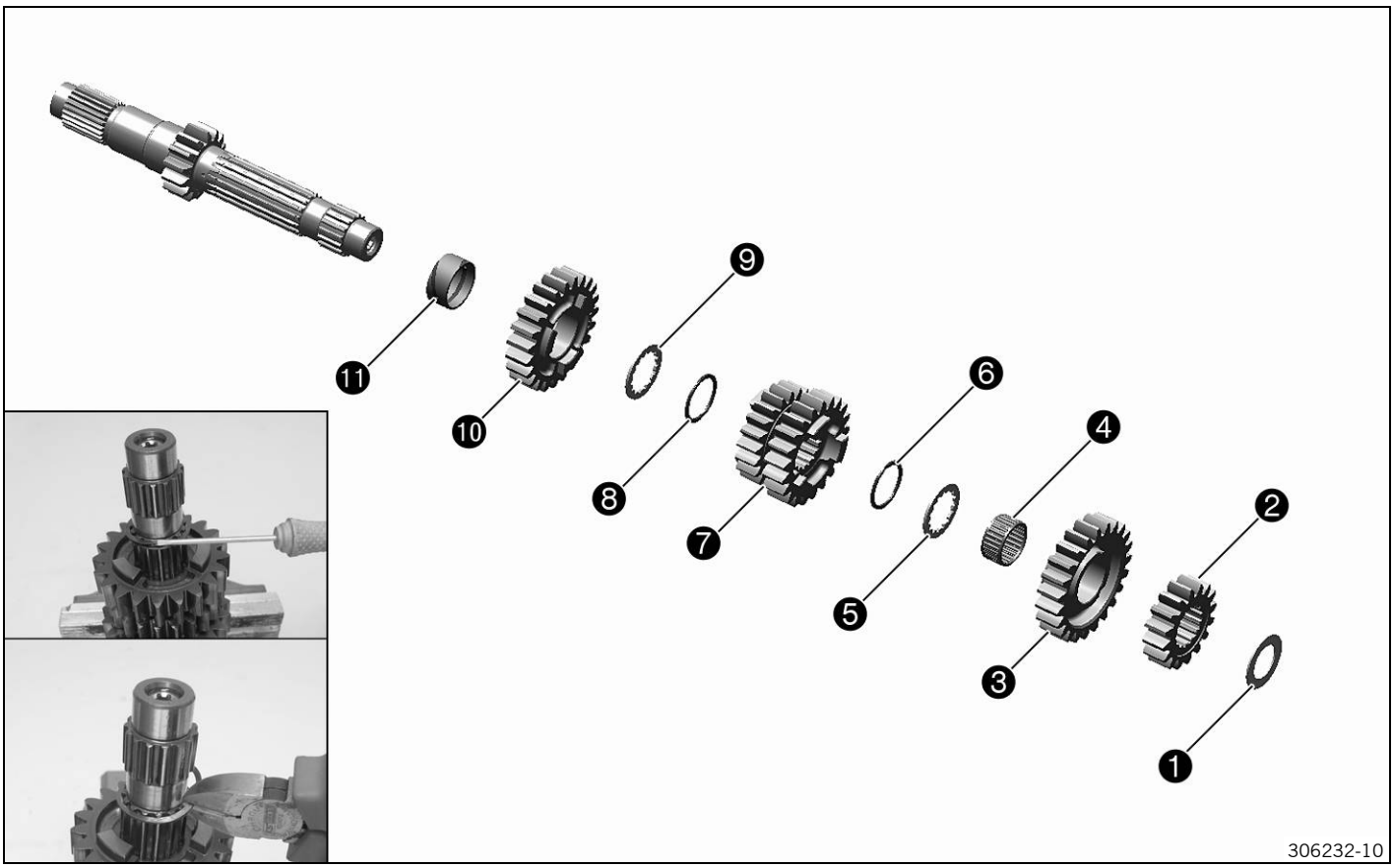


– Fix the main shaft in the vise with the geared end facing downward.

Guideline

| |
|---|
| Use soft jaws. |

– Remove stop disk ❶ and second-gear fixed gear ❷.
– Remove the sixth-gear idler gear ❸.
– Remove the split needle bearing ❹ and stop disk ❺.
– Remove lock ring ❻.

**Info**
Open the lock ring with a screwdriver and twist it off the transmission shaft with pliers.

– Remove the third/fourth-gear sliding gear ❼.
– Remove lock ring ❽.
– Remove stop disk ❾ and fifth-gear idler gear ❿.
– Remove bearing bush ⓫.

## 16.4.35 Disassembling the countershaft

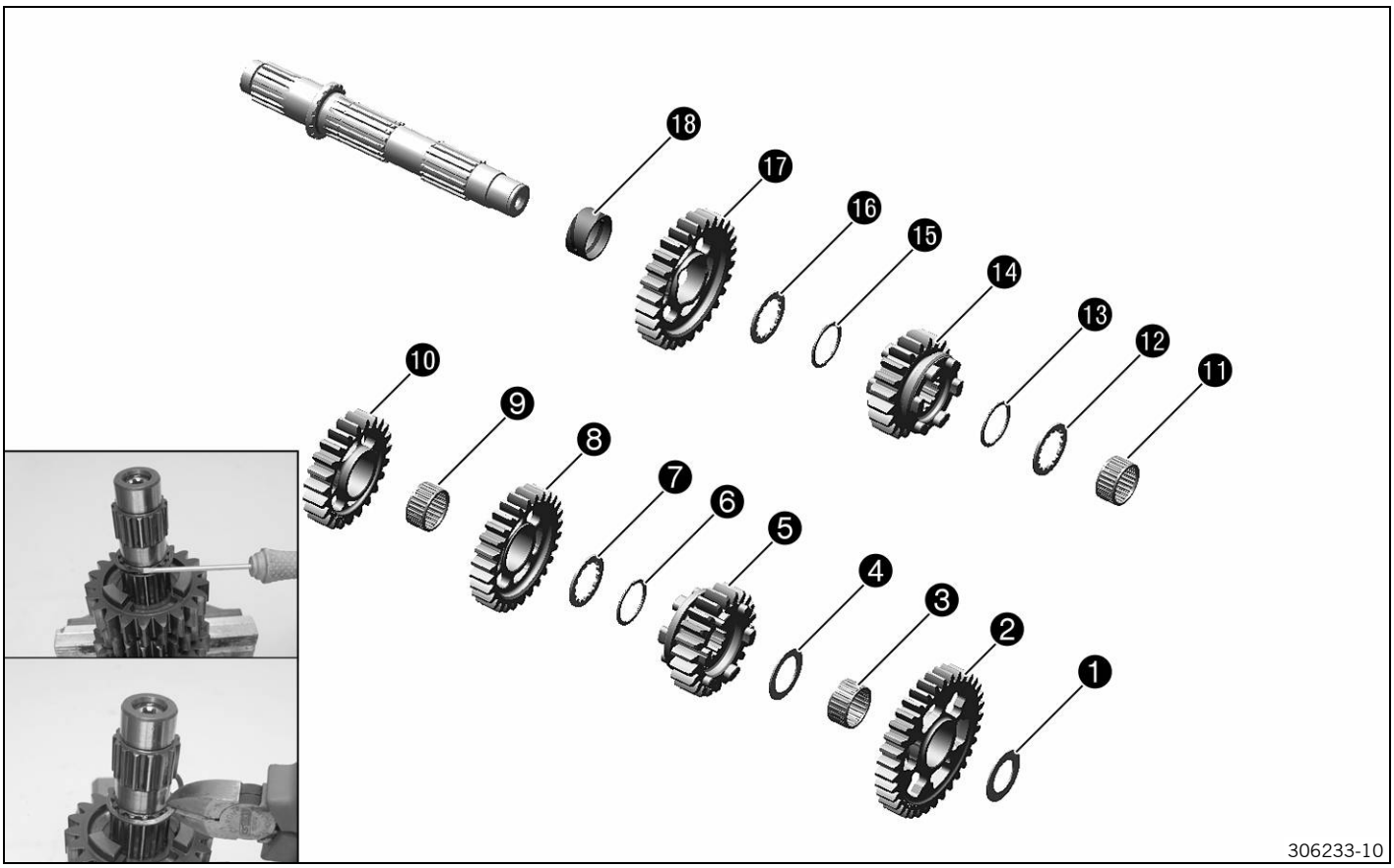


– Fix the countershaft in the vise with the geared end facing downward.

Guideline

| |
|---|
| Use soft jaws |

– Remove stop disk ❶ and first-gear idler gear ❷.
– Remove needle bearing ❸ and stop disk ❹.
– Remove fifth-gear sliding gear ❺ and lock ring ❻.

**Info**
Open the lock ring with a screwdriver and twist it off the transmission shaft with pliers.

– Remove stop disk ❼ and third-gear idler gear ❽.
– Remove needle bearing ❾ and the fourth-gear idler gear ❿.
– Remove needle bearing ⓫ and stop disk ⓬.
– Remove lock ring ⓭ and sixth-gear sliding gear ⓮.
– Remove lock ring ⓯ and stop disk ⓰.
– Remove the second-gear idler gear ⓱ and bearing bush ⓲.

## 16.4.36 Checking the transmission

**Condition**
The transmission has been disassembled.

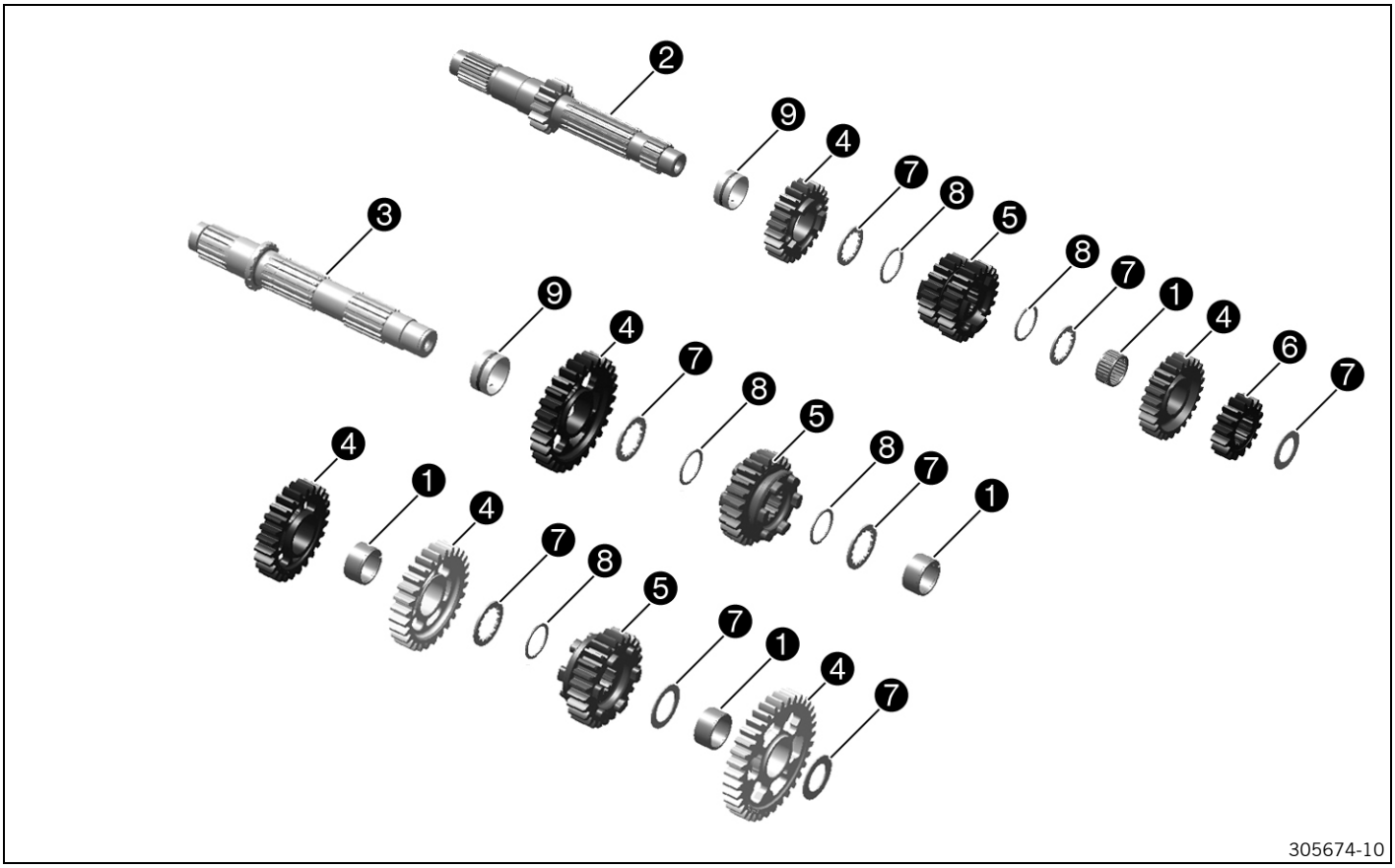


- Check needle bearings ❶ for damage and wear.
  - » If there is damage or wear:
    - – Change the needle bearing.
- Check the pivot points of main shaft ❷ and countershaft ❸ for damage and wear.
  - » If there is damage or wear:
    - – Change the main shaft and/or countershaft.
- Check the tooth profiles of main shaft ❷ and countershaft ❸ for damage and wear.
  - » If there is damage or wear:
    - – Change the main shaft and/or countershaft.
- Check the pivot points of idler gears ❹ for damage and wear.
  - » If there is damage or wear:
    - – Change the gear wheel pair.
- Check the shift dogs of idler gears ❹, sliding gears ❺, and fixed gear ❻ for damage and wear.
  - » If there is damage or wear:
    - – Change the gear wheel pair.
- Check the tooth faces of idler gears ❹, sliding gears ❺, and fixed gear ❻ for damage and wear.
  - » If there is damage or wear:
    - – Change the gear wheel pair.
- Check the tooth profiles of sliding gears ❺ for damage and wear.
  - » If there is damage or wear:
    - – Change the gear wheel pair.
- Check sliding gears ❺ for smooth operation in the profile of main shaft ❷.
  - » If the sliding gear does not move easily:
    - – Change the sliding gear or the main shaft.
- Check sliding gears ❺ for smooth operation in the profile of countershaft ❸.
  - » If the fixed gear does not move easily:
    - – Change the sliding gear or the countershaft.

- Check stop disks ❼ for damage and wear.
  - » If there is damage or wear:
    - Change the stop disk.
- Use new lock rings ❽ in every repair job.
- Check bearing bush ❾ for damage and wear.
  - » If there is damage or wear:
    - Change the bearing bush.

### 16.4.37 Assembling the main shaft

**Info**
Use new lock rings in every repair job.

**Preparatory work**
- Lubricate all parts carefully before assembling.
- Check the transmission. (☛ p. 148)

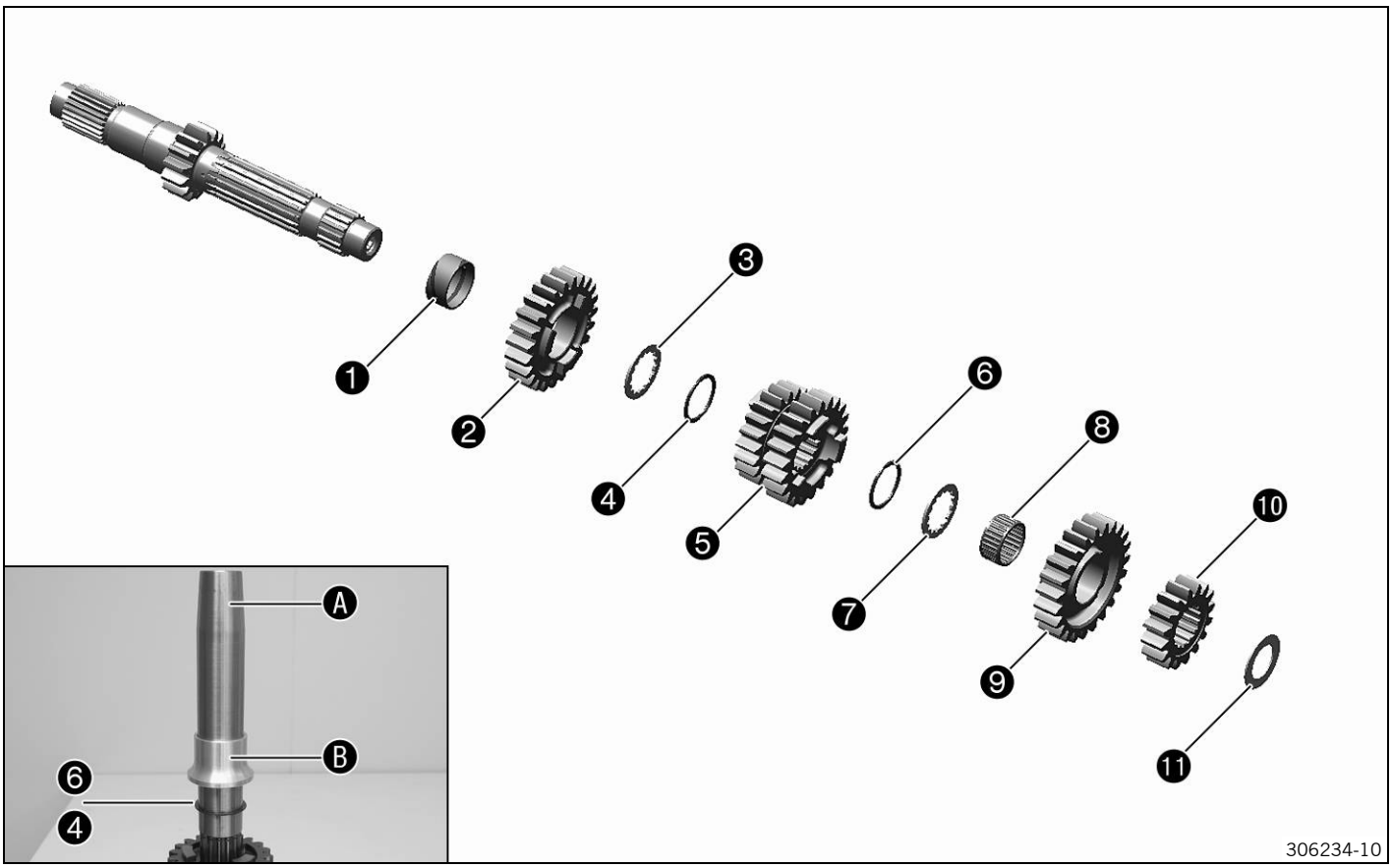


**Main work**
- Fix the main shaft in the vise with the geared end facing downward.

  Guideline

  | |
  |---|
  | Use soft jaws |

- Lubricate and mount bearing bush ❶.

  | |
  |---|
  | Long-life grease (☛ p. 226) |

- Push on the fifth-gear idler gear ❷ with the shift dogs facing upward.
- Mount stop disk ❸.
- Position special tool Ⓐ on the transmission shaft.

  | |
  |---|
  | Mounting tool for lock ring (75029005000) (☛ p. 233) |

- Position lock ring ❹ on special tool Ⓐ and push down with sleeve Ⓑ.
  - ✔ The lock ring engages in the groove of the transmission shaft.

- Push on the third/fourth-gear sliding gear ❺ with the small gear wheel facing downward.
- Position special tool Ⓐ on the transmission shaft.

| Mounting tool for lock ring (75029005000) (☛ p. 233) |
|---|

- Position lock ring ❻ on special tool Ⓐ and push down with sleeve Ⓑ.
  ✔ The lock ring engages in the groove of the transmission shaft.
- Push on stop disk ❼ and split needle bearing ❽.
- Push on the sixth-gear idler gear ❾ with the shift dogs facing downward.
- Push on the second-gear fixed gear ❿ with the collar facing downward and mount stop disk ⓫.
- Finally, check all gear wheels for smooth operation.

## 16.4.38 Assembling the countershaft

**Info**
Use new lock rings in every repair job.

**Preparatory work**
- Lubricate all parts carefully before assembling.
- Check the transmission. (☛ p. 148)

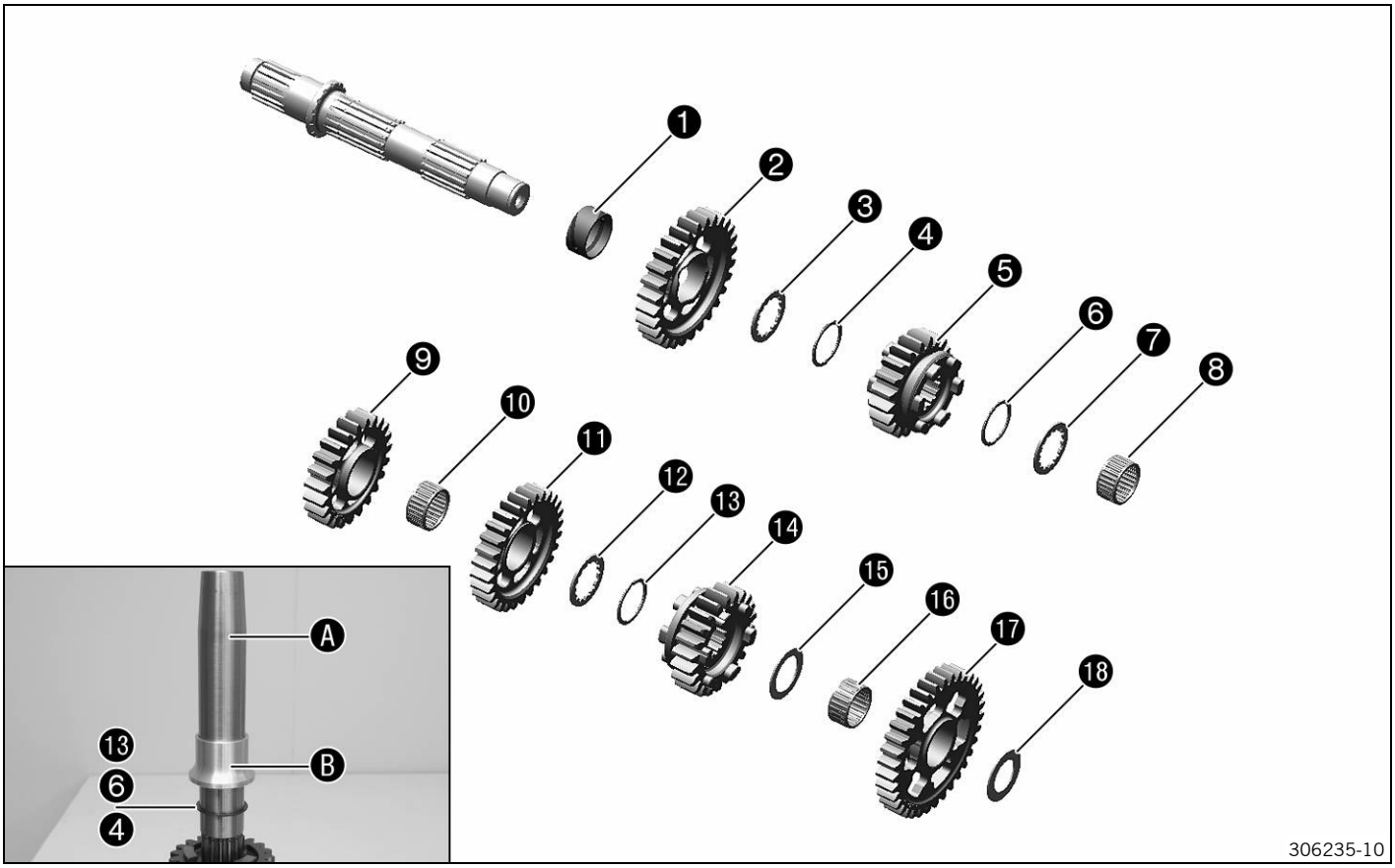


**Main work**
- Fix the countershaft in the vise with the geared end facing downward.
  Guideline

| Use soft jaws |
|---|

- Mount bearing bush ❶ and the second-gear idler gear ❷ on the countershaft with the protruding collar facing downward.
- Mount stop disk ❸.
- Position special tool Ⓐ on the transmission shaft.

| Mounting tool for lock ring (75029005000) (☛ p. 233) |
|---|

- Position lock ring ❹ on special tool Ⓐ and push down with sleeve Ⓑ.
  ✔ The lock ring engages in the groove of the transmission shaft.

- Mount the sixth-gear sliding gear ❺ with the shift groove facing upward.
- Position special tool Ⓐ on the transmission shaft.

| Mounting tool for lock ring (75029005000) (☛ p. 233) |
|---|

- Position lock ring ❻ on special tool Ⓐ and push down with sleeve Ⓑ.
  ✔ The lock ring engages in the groove of the transmission shaft.
- Mount stop disk ❼.
- Mount needle bearing ❽ and the fourth-gear idler gear ❾ with the collar facing upward.
- Mount needle bearing ❿ and the third-gear idler gear ⓫ with the collar facing downward.
- Mount stop disk ⓬.
- Position special tool Ⓐ on the transmission shaft.

| Mounting tool for lock ring (75029005000) (☛ p. 233) |
|---|

- Position lock ring ⓭ on special tool Ⓐ and push down with sleeve Ⓑ.
  ✔ The lock ring engages in the groove of the transmission shaft.
- Mount the fifth-gear sliding gear ⓮ with the shift groove facing downward and stop disk ⓯.
- Mount needle bearing ⓰, first-gear idler gear ⓱ with the recess facing downward and stop disk ⓲.
- Finally, check all gear wheels for smooth operation.

### 16.4.39 Checking the starter drive

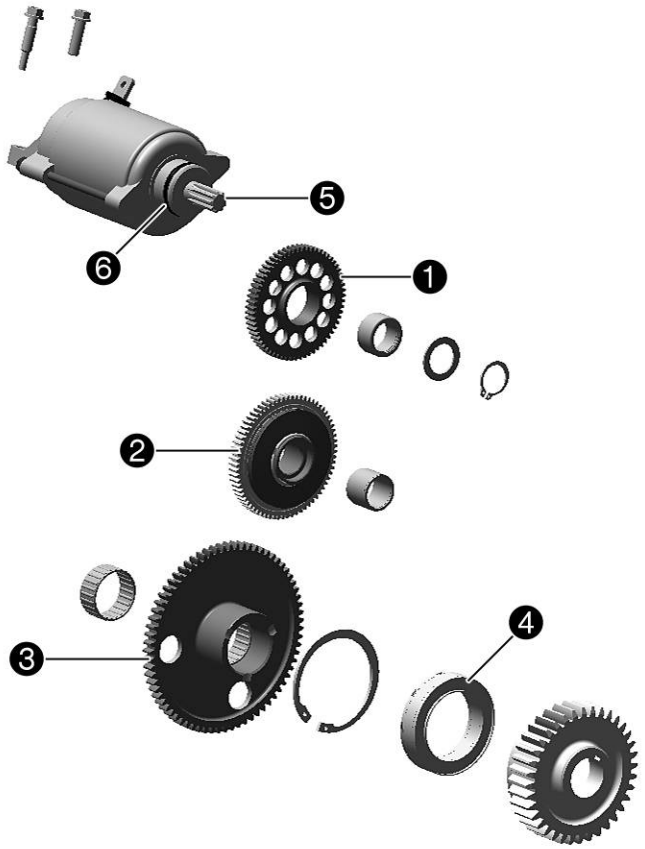

305600-10

- Check the teeth and seating of the starter idler gear ❶ for damage and wear.
  » If there is damage or wear:
    – Change the starter idler gear and/or needle bushing.
- Check the teeth and seating of torque limiter ❷ for damage and wear.
  » If there is damage or wear:
    – Change the torque limiter and/or needle bearing.
- Check freewheel gear ❸ and bearing when removed for damage and wear.
  » If there is damage or wear:

  - Change the freewheel gear and/or the bearing.
- Check freewheel ❹ when removed for damage and wear.
  » If there is damage or wear:
    - Change the freewheel.
- Check the toothing of starter motor ❺ for damage and wear.
  » If there is damage or wear:
    - Change the starter motor.
- Connect the negative cable of a 12 volt power supply to the housing of the starter motor. Briefly connect the positive cable of the power supply to the starter motor connection.
  » If the starter motor does not turn when the circuit is closed:
    - Change the starter motor.
- Change O-ring ❻ of the starter motor.

### 16.4.40 Checking freewheel

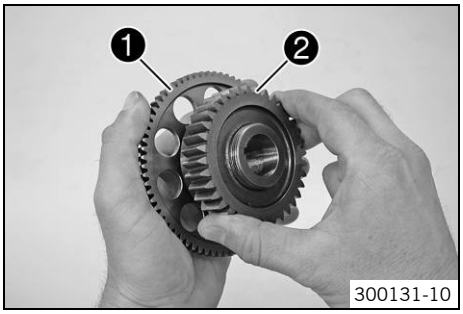


- Insert the freewheel gear ❶ in the primary gear ❷, turning the primary gear clockwise; do not twist!
- Check the locking action of the freewheel gear ❶.
  » If the primary gear does not turn clockwise or if it does not lock counterclockwise:
    - Remove the freewheel. (☛ p. 153)
    - Turn the freewheel 180°.
    - Install the freewheel. (☛ p. 153)

### 16.4.41 Removing freewheel

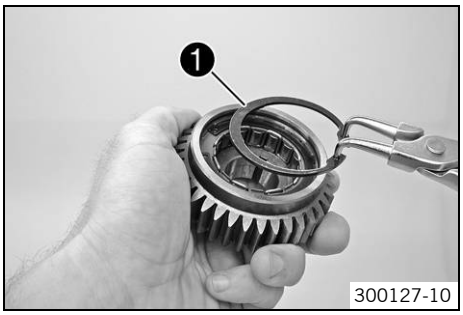


- Extract the lock ring ❶ from the groove using suitable pliers.

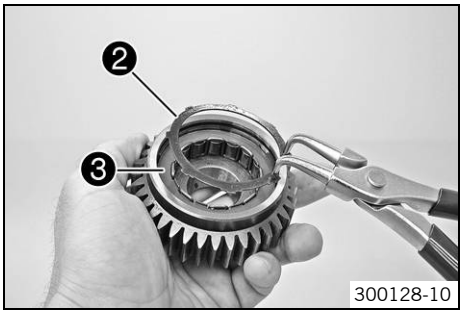


- Compress the expansion ring ❷ and remove it, using suitable pliers.
- Take the freewheel ❸ out of the primary gear.

### 16.4.42 Installing freewheel

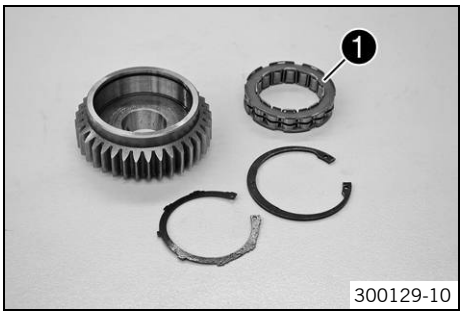


- Lubricate all parts thoroughly.
- Push the freewheel ❶ into the primary gear.

**Info**
Note the direction of rotation.

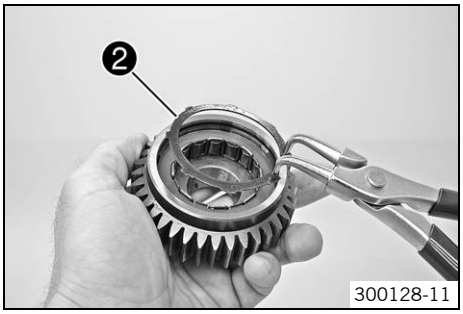


– Install the expansion ring ❷.

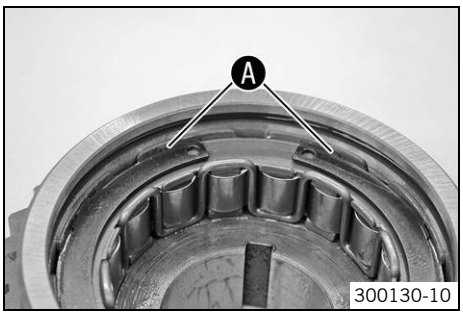


– Make sure that all lugs of the expansion ring locate in the slits Ⓐ of the freewheel.

**Info**
If necessary, use a screwdriver to ease them in.

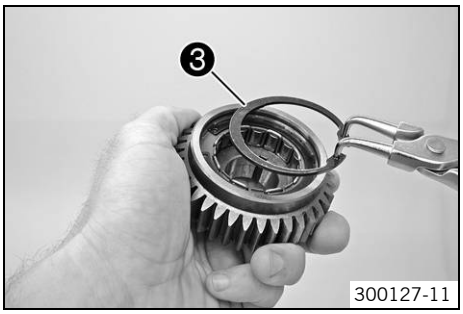


– Insert the lock ring ❸ into the groove with suitable pliers and check that it is seated correctly.

## 16.5 Assembling the engine

### 16.5.1 Installing the transmission shafts

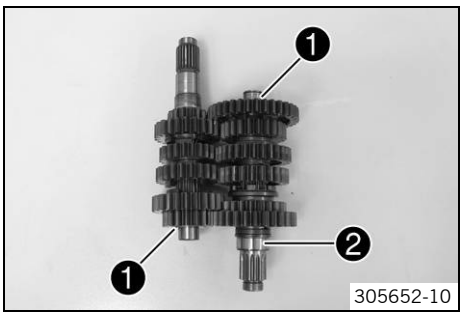


– Clamp the right section of the engine case.

| |
|---|
| Holder for engine assembly stand (75012001070) (☛ p. 232) |
| Support for engine assembly stand (75012001060) (☛ p. 232) |
| Engine assembly stand (61229001000) (☛ p. 232) |

– Make sure that both stop disks ❶ are installed.
– Mount the inner bearing race ❷ on the countershaft.

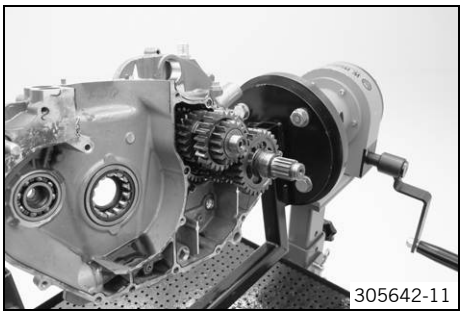


– Oil all bearings.
– Assemble the two transmission shafts and slide them into the bearing seats together.

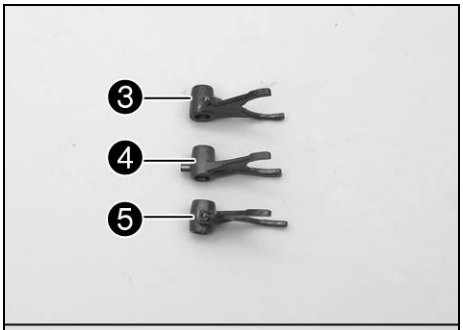


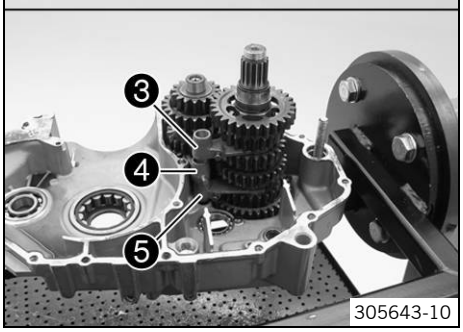


– Mount the upper shift fork ❸, the middle shift fork ❹, and the lower shift fork ❺.

**Info**
For easier assembly of the middle shift fork ❹, lift the sliding gear of the third/fourth gear.

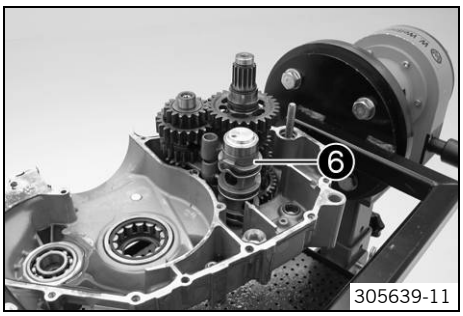


– Insert shift drum ❻ into the bearing seat.
– Hang the shift forks into the shift drum.

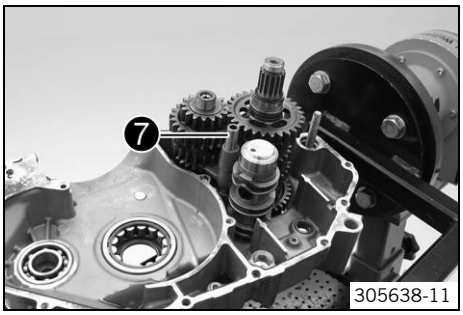


– Mount shift rail ❼.
– Check the transmission for smooth operation.

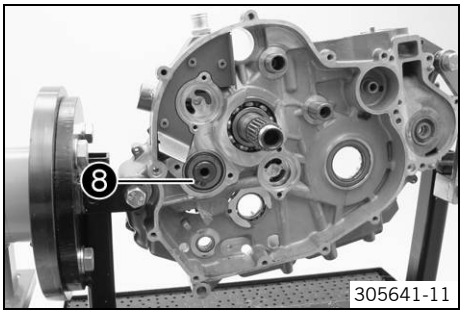


– Mount the washer and lock ring ❽.

## 16.5.2 Installing crankshaft and balancer shaft

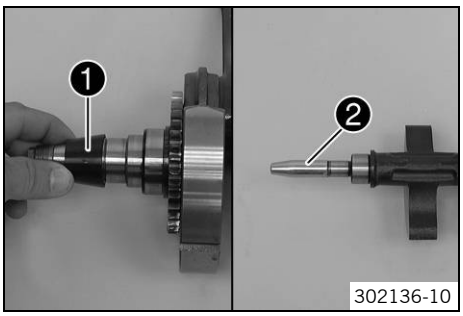


– Mount the special tool ❶ on the alternator side of the crankshaft.

| Mounting sleeve (75029080000) (☛ p. 236) |
|---|

– Mount the special tool ❷ on the balancer shaft.

| Mounting sleeve (58529005000) (☛ p. 229) |
|---|

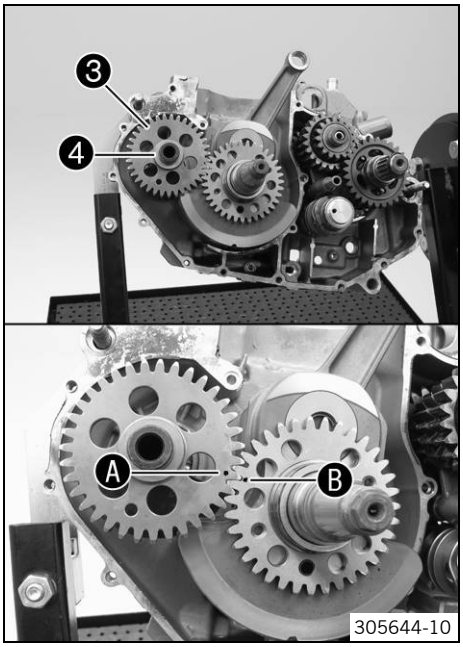


- Push the crankshaft into the bearing seat and take off the special tool.
- Grease the shaft seal rings of the balancer shaft.
- Push the balancer shaft ❸ into the bearing seat and take off the special tool.
  ✔ Align marks Ⓐ and Ⓑ.
- Mount stop disk ❹.

### 16.5.3 Installing the left engine case

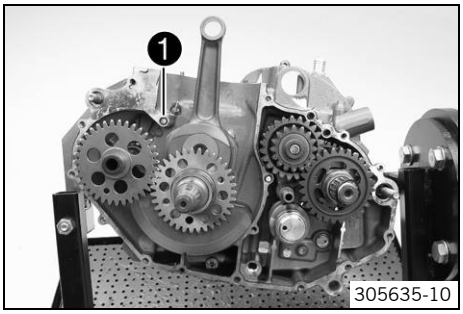


- Mount the dowels.
- Mount O-ring ❶.
- Degrease the sealing area. Apply the sealing compound to the left section of the engine case.

| |
|---|
| **Loctite® 5910** |

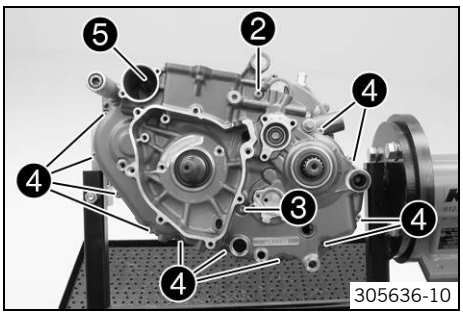


- Put on the left section of the engine case. If necessary, tap lightly with a rubber mallet and turn the transmission shafts.

**Info**
Do not tighten the engine case sections using the screws.

- Mount screw ❷ but do not tighten it yet.
  Guideline

| | | |
|---|---|---|
| Screw, engine case | M6x80 | 10 Nm (7.4 lbf ft) |

- Mount screw ❸ but do not tighten it yet.
  Guideline

| | | |
|---|---|---|
| Screw, engine case | M6x70 | 10 Nm (7.4 lbf ft) |

- Mount screws ❹ but do not tighten yet.
  Guideline

| | | |
|---|---|---|
| Screw, engine case | M6x30 | 10 Nm (7.4 lbf ft) |

- Mount screw ❺ with washer but do not tighten it yet.
  Guideline

| | | |
|---|---|---|
| Screw, engine case | M6x25 | 10 Nm (7.4 lbf ft) |

**Info**
Mount the screw with a new copper washer.

- Tighten all screws in a crisscross pattern.
  Guideline

| | | |
|---|---|---|
| Screw, engine case | M6 | 10 Nm (7.4 lbf ft) |

### 16.5.4 Installing the oil pumps

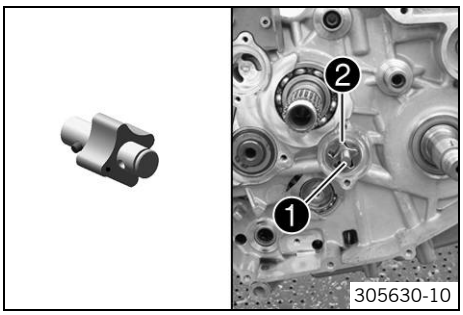


- Mount the pin and internal rotor on the oil pump shaft.
- Position the external rotor in the engine case.
  ✔ The marking is not visible after mounting.
- Mount the oil pump shaft ❶ with internal rotor ❷.
- Oil the parts.

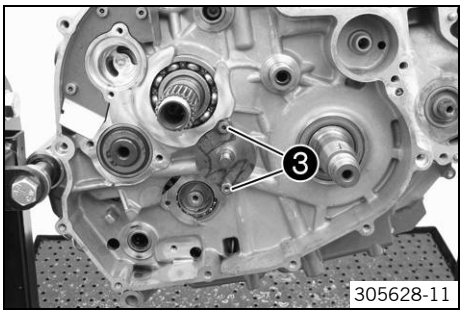


- Position the oil pump cover.
- Mount and tighten screws ❸.

  Guideline

| | | | |
|---|---|---|---|
| Screw, oil pump cover | M5 | 6 Nm (4.4 lbf ft) | **Loctite® 243™** |

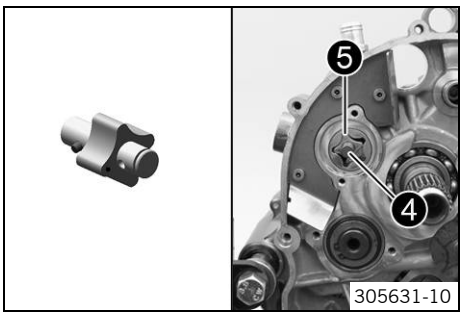


- Mount the pin and internal rotor on the oil pump shaft.
- Position the external rotor in the engine case.
  ✔ The marking is not visible after mounting.
- Mount the oil pump shaft ❹ with internal rotor ❺.
- Oil the parts.

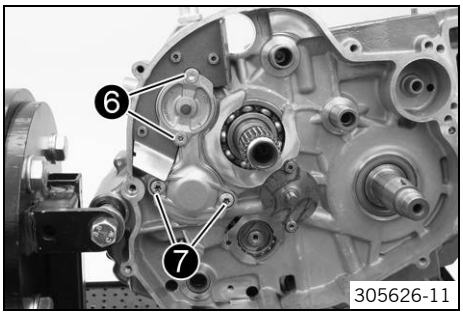


- Position the oil pump cover.
- Mount and tighten screws ❻.

  Guideline

| | | | |
|---|---|---|---|
| Screw, oil pump cover, top | M5 | 6 Nm (4.4 lbf ft) | **Loctite® 243™** |

- Mount and tighten screws ❼.

  Guideline

| | | | |
|---|---|---|---|
| Screw, oil pump cover, bottom | M6 | 10 Nm (7.4 lbf ft) | **Loctite® 243™** |

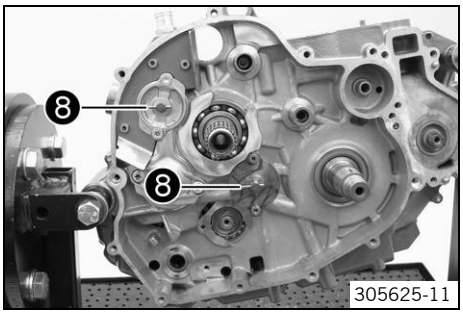


- Mount washers and pins ❽.

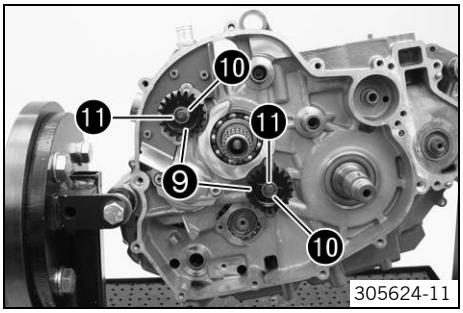


- Mount the oil pump gear wheels ❾, washers ❿ and lock washers ⓫.

### 16.5.5 Installing locking lever

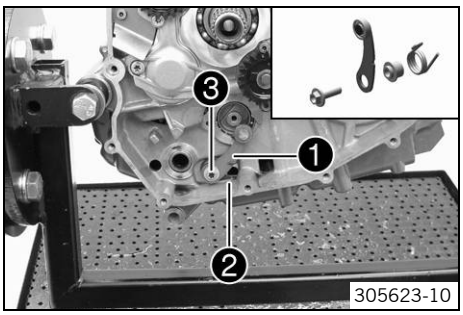


- Position locking lever ❶ with sleeve and spring ❷.
- Mount and tighten screw ❸.

Guideline

| | | | |
|---|---|---|---|
| Screw, locking lever | M6x20 | 10 Nm (7.4 lbf ft) | **Loctite® 243™** |

### 16.5.6 Installing shift drum locating

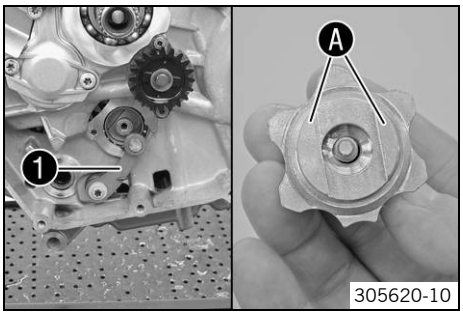


- Press locking lever ❶ down and position shift drum locating.

**Info**
The flat surfaces Ⓐ of the shift drum locating are not symmetric.

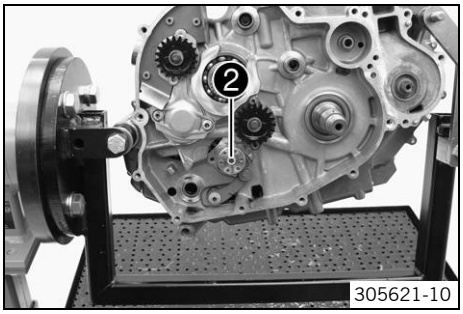


- Release the locking lever.
- Mount and tighten screw ❷.

Guideline

| | | | |
|---|---|---|---|
| Screw, shift drum locating | M6x30 | 10 Nm (7.4 lbf ft) | **Loctite® 243™** |

### 16.5.7 Installing shift shaft

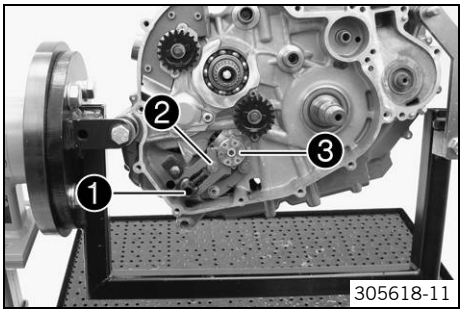


- Slide shift shaft ❶ with the washer into the bearing seat.
- Push sliding plate ❷ away from the shift drum locating ❸. Insert the shift shaft all the way.
- Let the sliding plate engage in the shift drum locating.
- Shift through the transmission.

### 16.5.8 Installing the starter drive

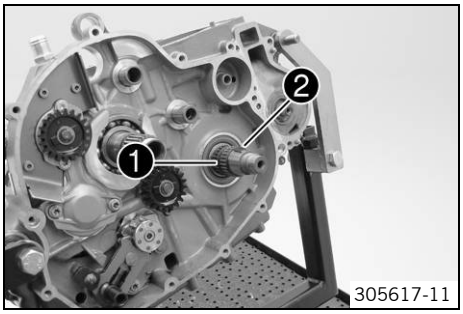


- Mount the two needle bearings ❶ and the woodruff key ❷.

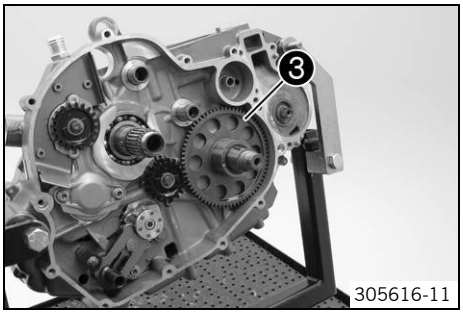


– Position freewheel gear ❸.

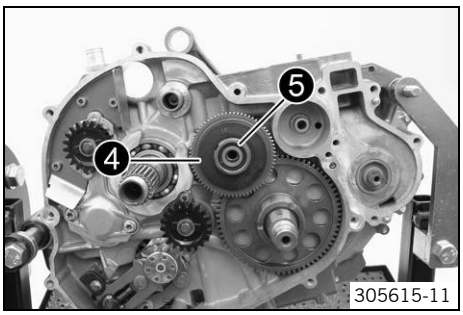


– Mount the needle bearing and torque limiter ❹ with the washer.
– Mount lock ring ❺.

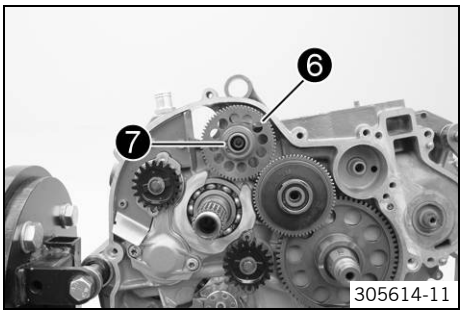


– Mount the starter idler gear ❻ with the washer.
– Mount lock ring ❼.

## 16.5.9 Installing the primary gear

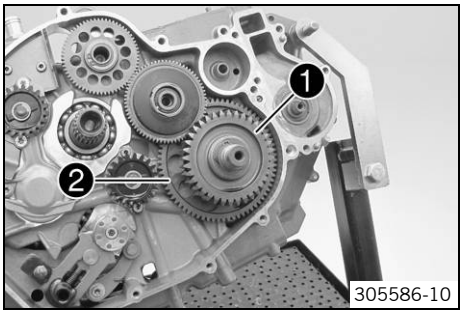


– Ensure that the woodruff key is seated properly.
– Mount primary gear ❶.

**Info**
Turn freewheel gear ❷ backwards and forwards to ease meshing.

## 16.5.10 Installing the clutch basket

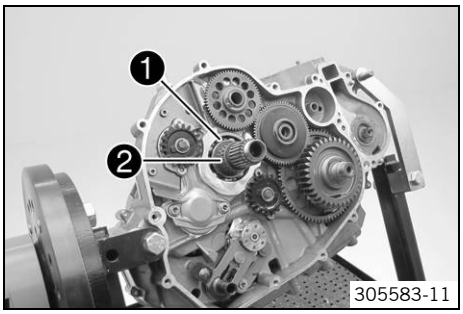


– Mount supporting plate ❶ and needle bearing ❷.

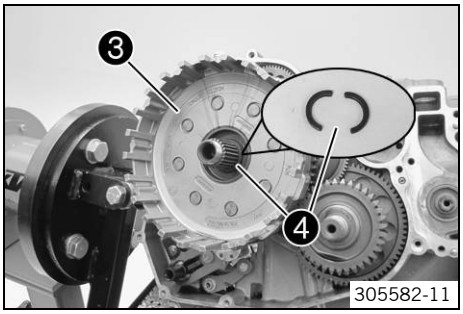


– Mount clutch basket ❸.

**Info**
Turn the clutch basket and oil pump gear wheels backwards and forwards slightly to help them mesh more easily.

– Mount half washers ❹ with the sharp edge facing outward.

**Info**
Grease the half washers to ease assembly.

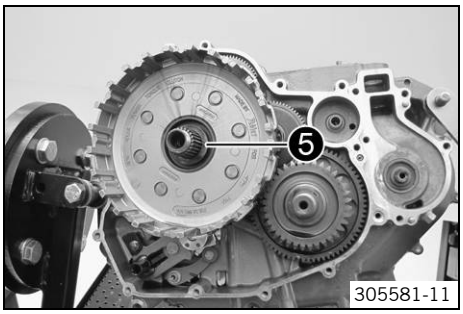


– Position stepped washer ❺ with the recesses toward the half washers.

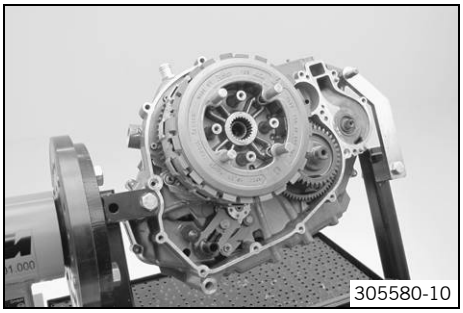


– Insert the antihopping clutch in the clutch basket.
✔ The uppermost clutch facing disc is offset by one tooth.

**Info**
If necessary, turn the main shaft a little to ease access.

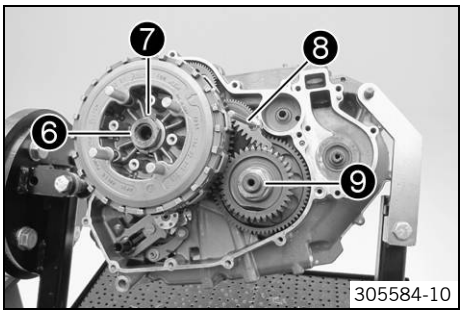


– Mount the new lock washer ❻ with nut ❼.
– Lock the clutch basket and primary gear using special tool ❽ and tighten the nut.

Guideline

| | | | |
|---|---|---|---|
| Nut, inner clutch hub | M20x1.5 | 100 Nm (73.8 lbf ft) | **Loctite® 243™** |

| |
|---|
| Gear segment (75029081000) (☛ p. 236) |

**Info**
Make sure that the crankshaft is not blocked.

– Secure the nut with the lock washer.
– Mount and tighten nut ❾.

Guideline

| | | | |
|---|---|---|---|
| Nut, primary gear | M20LHx1.5 | 90 Nm (66.4 lbf ft) | **Loctite® 243™** |

– Remove the special tool.

| |
|---|
| Gear segment (75029081000) (☛ p. 236) |

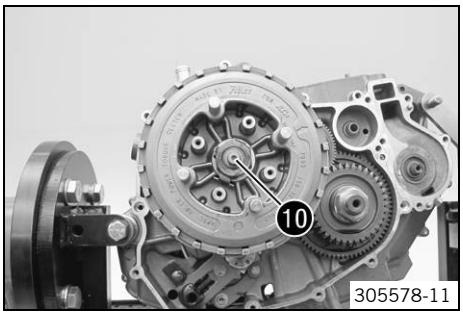


– Mount pressure piece ❿.

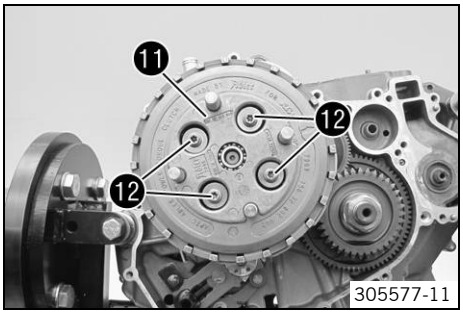


– Position pressure cap ⓫.
– Mount and tighten screws ⓬ with the spring retainers and clutch springs.

Guideline

| | | |
|---|---|---|
| Screw, clutch spring | M5x25 | 6 Nm (4.4 lbf ft) |

**Info**
Ensure that all clutch springs have a blue color coding.

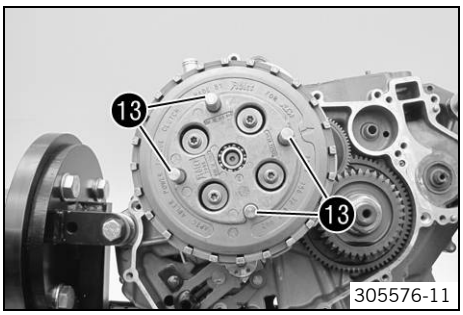


– Remove special tool ⓭.

| |
|---|
| Assembly screws (75029033000) (☛ p. 233) |

## 16.5.11 Installing the spacer and spring

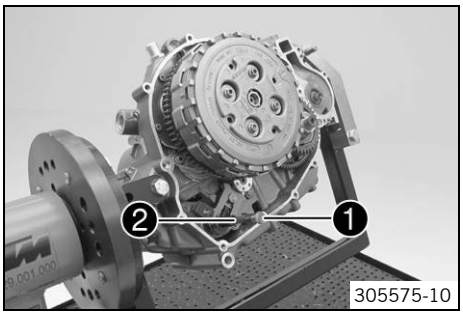


– Position spacer ❶ and spring ❷.

## 16.5.12 Installing the clutch cover

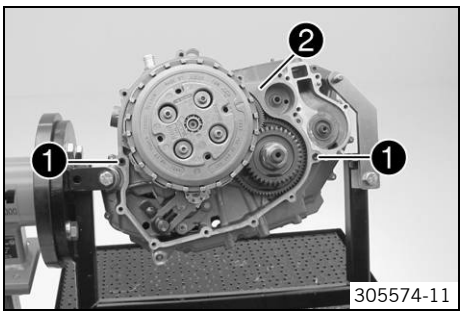


– Mount dowels ❶ and position the clutch cover gasket ❷.

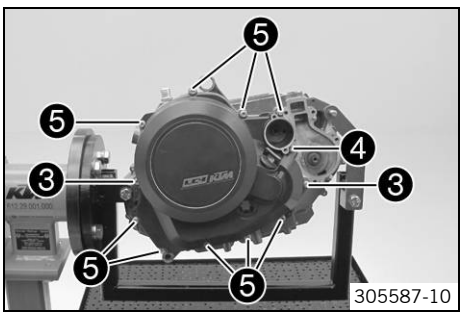


– Position the clutch cover.
– Mount screws ❸ but do not tighten yet.

Guideline

| | | |
|---|---|---|
| Screw, clutch cover | M6x30 | 10 Nm (7.4 lbf ft) |

– Mount screw ❹ but do not tighten it yet.

Guideline

| | | |
|---|---|---|
| Screw, clutch cover | M6x35 | 10 Nm (7.4 lbf ft) |

– Mount screws ❺ and tighten all screws in a crisscross pattern.

Guideline

| | | |
|---|---|---|
| Screw, clutch cover | M6x25 | 10 Nm (7.4 lbf ft) |

## 16.5.13 Installing the ignition pulse generator

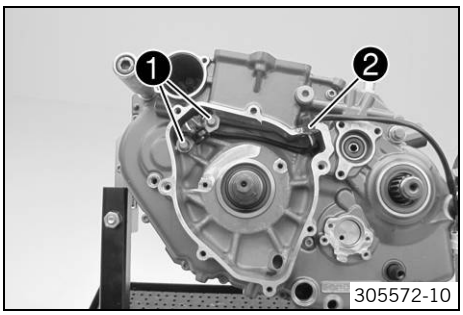


- Position the ignition pulse generator.
- Mount screws ❶ but do not tighten yet.

  Guideline

| | | | |
|---|---|---|---|
| Screw, crankshaft position sensor | M6x16 | 10 Nm (7.4 lbf ft) | **Loctite® 243™** |

- Position the cable and position cable sleeve ❷ in the engine case.

## 16.5.14 Installing timing chain and timing chain sprocket

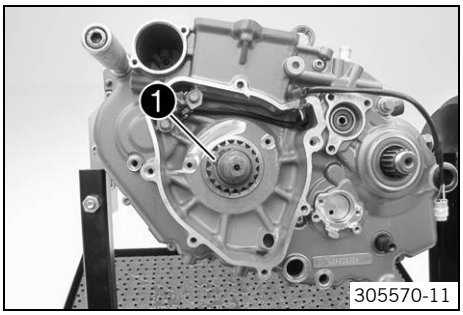


- Heat the timing chain sprocket and push it immediately on to the crankshaft.

  Guideline

| |
|---|
| 100 °C (212 °F) |

- Mount lock ring ❶.

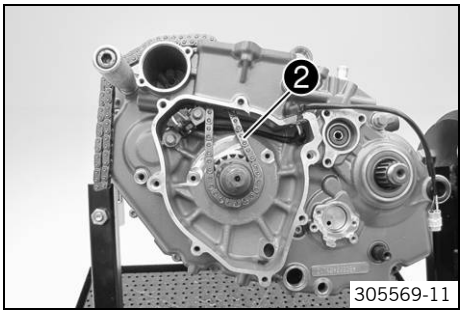


- Thread the timing chain ❷ in and lay it over the timing chain sprocket.

> **Info**
> If the timing chain is not new, pay attention to the direction of travel.

## 16.5.15 Installing the timing chain rails

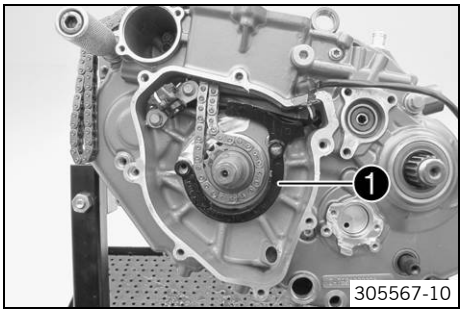


- Position the timing chain securing guide ❶.

  ✔ The ignition pulse generator cable is routed in the cable duct of the timing chain securing guide.

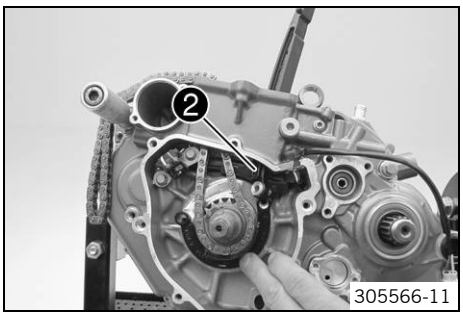


- Position the timing chain tensioning rail ❷ from above.
- Insert the support bushing into the timing chain securing guide.

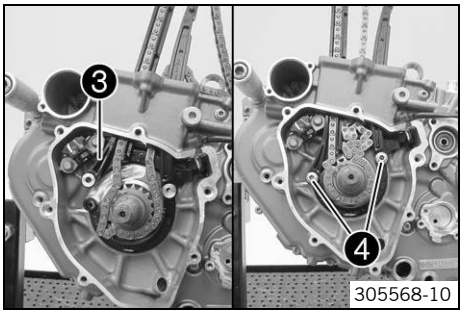


- Position the timing chain guide rail ❸ from above.
- Insert the support bushing into the timing chain securing guide.
- Mount and tighten screws ❹.

Guideline

| | | | |
|---|---|---|---|
| Screw, timing chain guide rail | M6x30 | 10 Nm (7.4 lbf ft) | **Loctite® 243™** |
| Screw, timing chain tensioning rail | M6x30 | 10 Nm (7.4 lbf ft) | **Loctite® 243™** |

**Info**
Ensure that there is no thread locking material at the collar of the screw; otherwise, the timing chain tensioning rail could lock and break.

- Check both timing chain rails for freedom of movement.

## 16.5.16 Installing the rotor

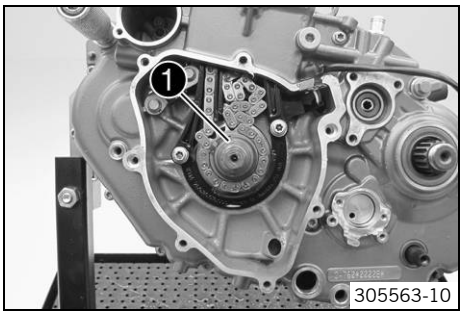


- Ensure that woodruff key ❶ is seated properly.
- Degrease the cone of the crankshaft and rotor.
- Mount the rotor.

**Info**
Make sure that the crankshaft is not blocked.

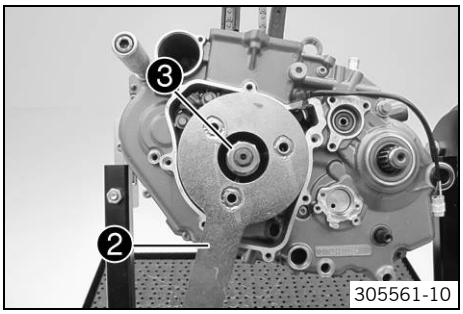


- Hold the rotor with special tool ❷.

| |
|---|
| Holding spanner (75029091000) (☛ p. 236) |

- Mount and tighten nut ❸ with the locking edge washer.

Guideline

| | | |
|---|---|---|
| Rotor nut | M18x1.5 | 100 Nm (73.8 lbf ft) |

## 16.5.17 Adjusting crankshaft position sensor distance

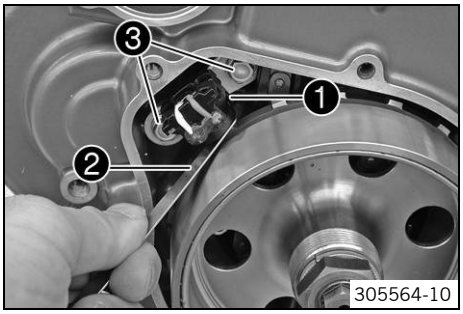


- Adjust the distance between the crankshaft position sensor ❶ and the conductive element of the rotor using the special tool ❷.

Guideline

| | |
|---|---|
| Crankshaft position sensor/rotor - distance | 0.70 mm (0.0276 in) |

| |
|---|
| Feeler gauge (59029041100) (☛ p. 230) |

- Fully tighten screws ❸.

Guideline

| | | | |
|---|---|---|---|
| Screw, crankshaft position sensor | M6x16 | 10 Nm (7.4 lbf ft) | **Loctite® 243™** |

### 16.5.18 Setting engine to top dead center

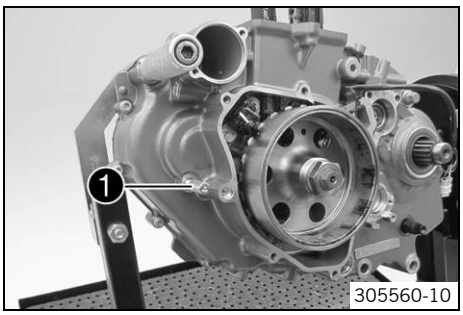


– Set the crankshaft to top dead center and lock it with the special tool ❶.

| |
|---|
| Engine blocking screw (77329010000) (☛ p. 237) |

### 16.5.19 Mounting the water pump cover

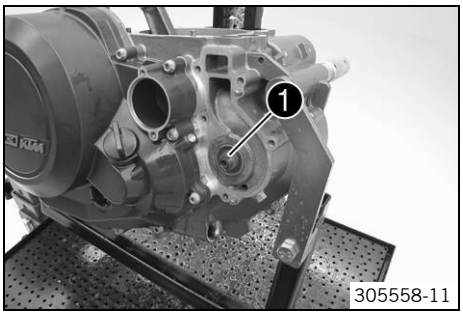


– Mount form washer ❶.

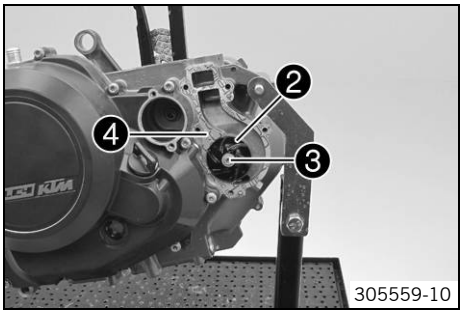


– Mount water pump impeller ❷.
– Mount and tighten screw ❸.

Guideline

| | | | |
|---|---|---|---|
| Screw, water pump impeller | M6x15 | 10 Nm (7.4 lbf ft) | **Loctite® 243™** |

– Lay on the water pump cover seal ❹.

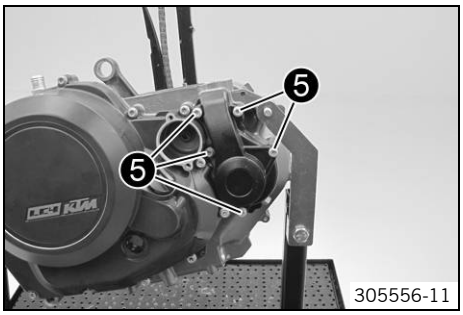


– Position the water pump cover.
– Mount and tighten screws ❺.

Guideline

| | | |
|---|---|---|
| Screw, water pump cover | M6x30 | 10 Nm (7.4 lbf ft) |

### 16.5.20 Installing piston

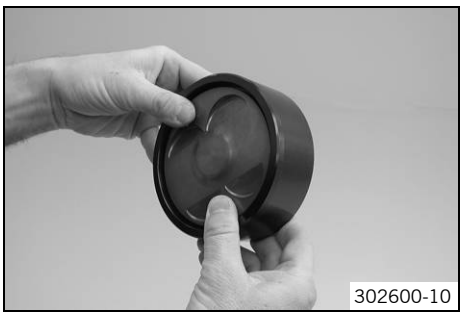


– Shift the joint of the piston rings by 120°.
– Push the oiled piston into the special tool.

| |
|---|
| Piston assembly ring (75029015102) (☛ p. 233) |

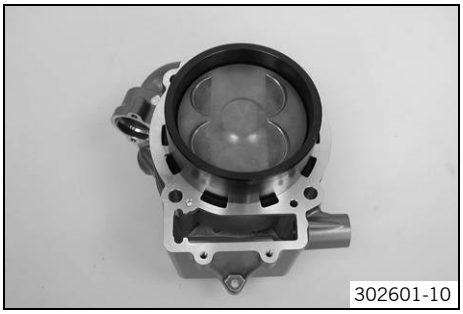


– Position the piston on the cylinder using the special tool.
– Push the piston carefully into the cylinder from above.
  ✔ The piston rings should not become caught; otherwise, they may be damaged.

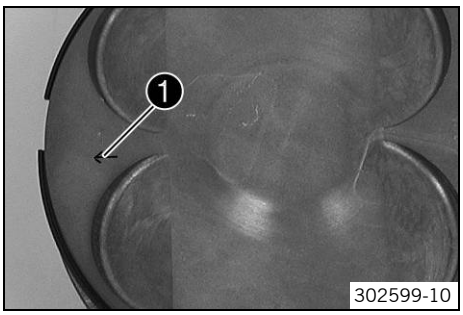


– Ensure that piston marking ❶ faces the outfeed side.

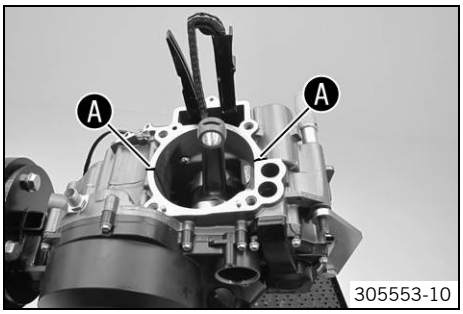


– Apply a thin layer of sealing compound in area Ⓐ.

| |
|---|
| **Loctite® 5910** |

– Place the cylinder base gasket on.

**Info**
Make sure the grooved pins are seated correctly.

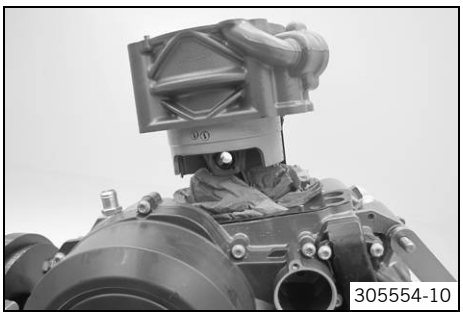


– Cover the engine case opening with a cloth. Thread the timing chain through the chain shaft. Mount the piston pin.

**Info**
For clarity, the following steps are illustrated using a disassembled piston.

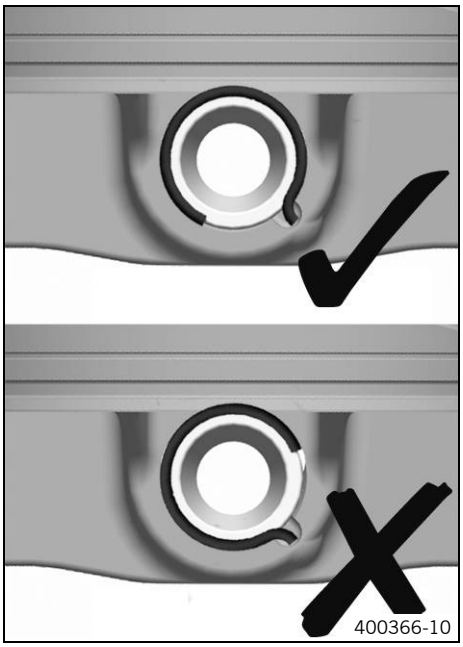


– Position the piston pin retainer.

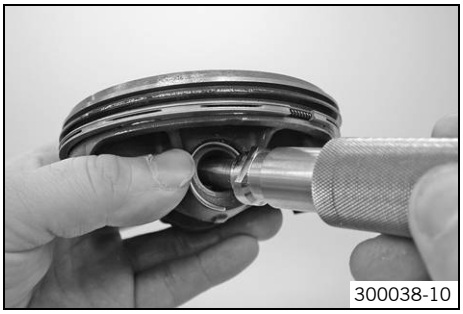
300038-10

- Insert the special tool and firmly press it toward the piston.
- Turn the special tool counterclockwise, thereby pressing the piston pin retainer into the groove.

| |
|---|
| Insertion for piston ring lock (75029035000) (☛ p. 233) |

- Make sure that the piston pin retainer is seated correctly on both sides.

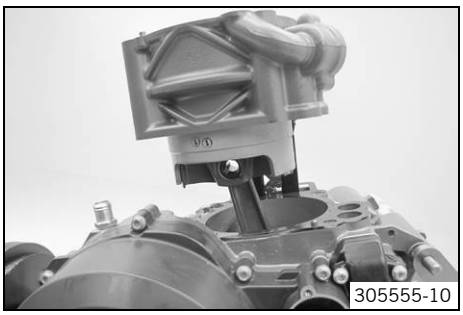
305555-10

- Remove the cloth.
- Keep the timing chain tensioned. Push the cylinder down carefully and let the grooved pins engage.

## 16.5.21 Installing the cylinder head

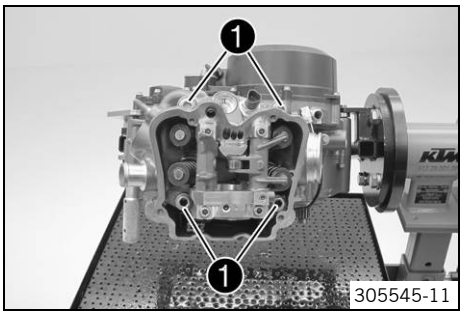

305545-11

- Put on the cylinder head gasket.

**Info**
Make sure the grooved pins are seated correctly.

- Mount the cylinder head.
- Mount and tighten screws ❶ with the washers.

Guideline

| | | | |
|---|---|---|---|
| Cylinder head screw | M10 | Tightening sequence: Tighten diagonally, beginning with the rear screw on the timing chain shaft.<br>Step 1<br>15 Nm<br>(11.1 lbf ft)<br>Step 2<br>30 Nm<br>(22.1 lbf ft)<br>Step 3<br>45 Nm<br>(33.2 lbf ft)<br>Step 4<br>60 Nm<br>(44.3 lbf ft) | Lubricated with engine oil |

**Info**
Always use new cylinder head screws.

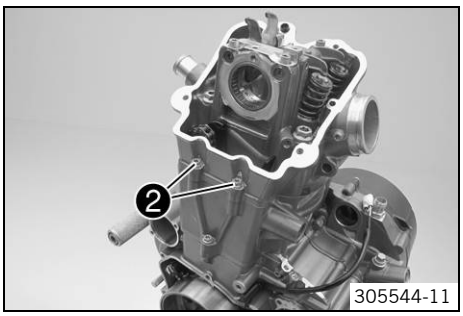

305544-11

- Mount and tighten screws ❷.

Guideline

| | | | |
|---|---|---|---|
| Cylinder head screw | M6x25 | 10 Nm<br>(7.4 lbf ft) | **Loctite® 243™** |

## 16.5.22 Installing the camshafts

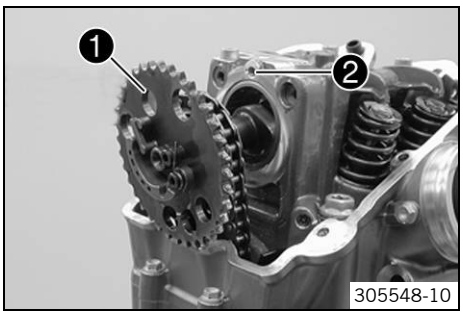


– Lay the timing chain over the camshaft. Push the camshaft into the bearing seats.

✔ The crankshaft is at top dead center.

✔ The middle drill hole of camshaft ❶ and the drill hole of cylinder head ❷ are aligned.

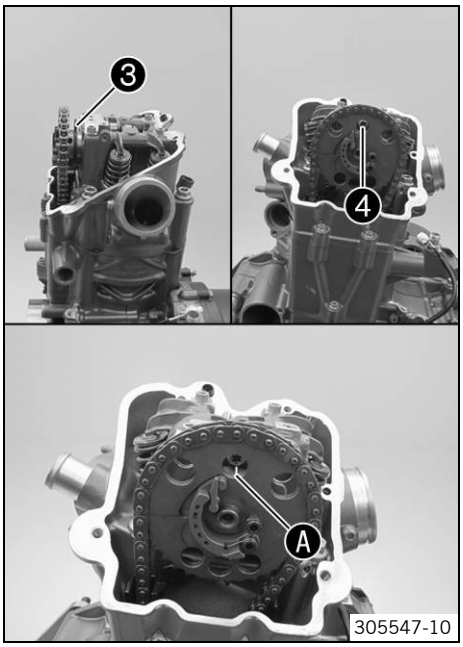


– Position the camshaft support plate ❸. Mount and tighten screw ❹.

Guideline

| | | | |
|---|---|---|---|
| Screw, camshaft support plate | M6x12 | 10 Nm (7.4 lbf ft) | **Loctite® 243™** |

✔ Marking Ⓐ of the camshaft is aligned with the marking of the camshaft support plate.

## 16.5.23 Installing timing chain tensioner

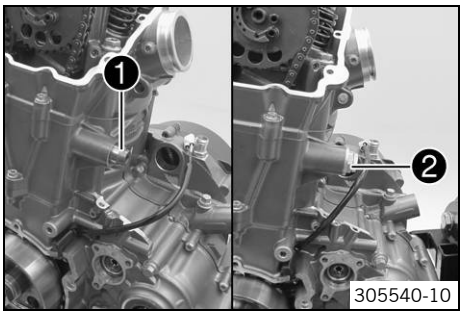


– Insert the timing chain tensioner ❶.

– Mount and tighten plug ❷ with the new seal ring.

Guideline

| | | |
|---|---|---|
| Plug, timing chain tensioner | M20x1.5 | 25 Nm (18.4 lbf ft) |

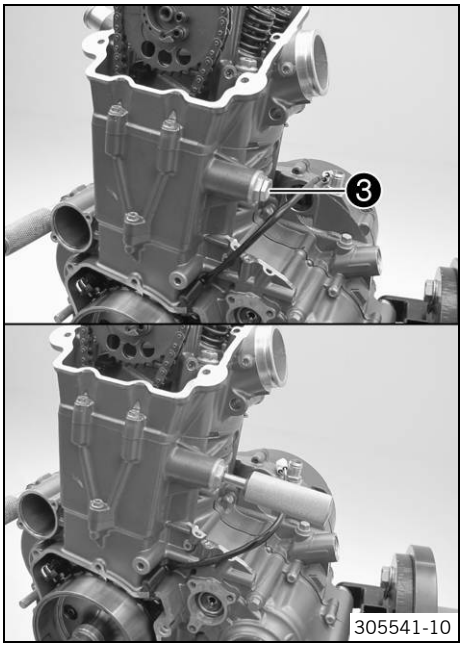


– Remove screw ❸ and use the special tool to push the timing chain tensioner toward the timing chain.

| |
|---|
| Release device for timing chain tensioner (77329051000) (☛ p. 237) |

✔ The timing chain tensioner unlocks.

– Mount and tighten screw ❸.

Guideline

| | | |
|---|---|---|
| Screw, unlocking of timing chain tensioner | M10x1 | 10 Nm (7.4 lbf ft) |

## 16.5.24 Checking valve clearance

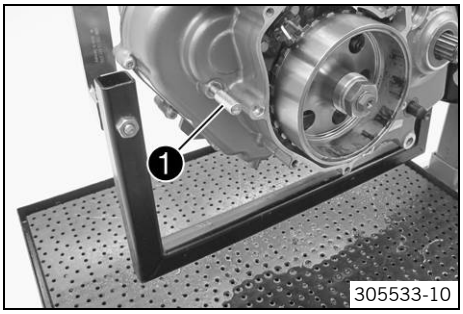


– Remove special tool ❶.
– Crank the engine several times.
– Set the engine to ignition top dead center. (☛ p. 113)

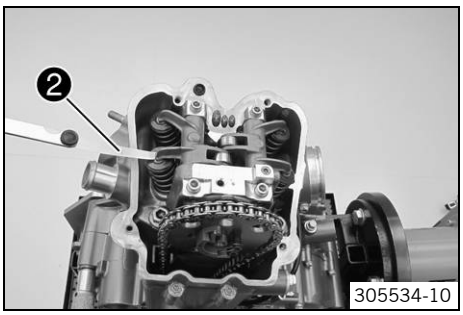


– Check the valve clearance on all valves between the valve and the rocker arm using the special tool ❷.

Guideline

| | |
|---|---|
| Valve play, cold | 0.07… 0.13 mm (0.0028… 0.0051 in) |

| |
|---|
| Feeler gauge (59029041100) (☛ p. 230) |

» If valve clearance does not meet specifications:
  – Adjust the valve clearance. (☛ p. 169)

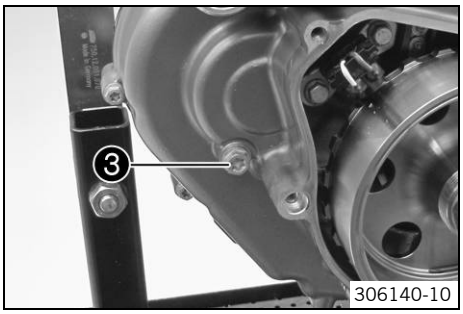


– Remove the special tool.

| |
|---|
| Engine blocking screw (77329010000) (☛ p. 237) |

– Mount and tighten screw ❸ with the washer.

Guideline

| | | |
|---|---|---|
| Screw plug, crankshaft clamp | M8 | 20 Nm (14.8 lbf ft) |

## 16.5.25 Adjusting the valve clearance

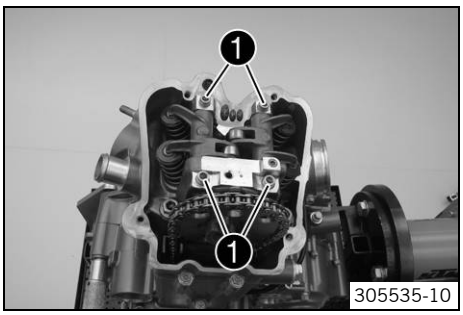


– Remove screws ❶.

> **Info**
> Make sure that the crankshaft is at top dead center.

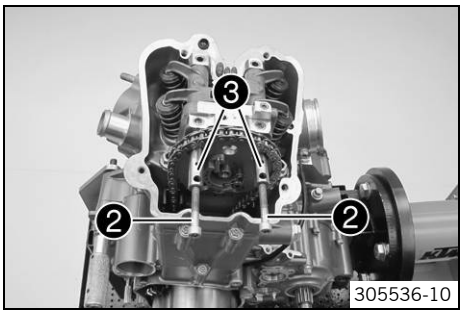


– Screw suitable screws ❷ into the rocker arm shafts ❸.
– Remove the rocker arm shafts and take off the rocker arm.

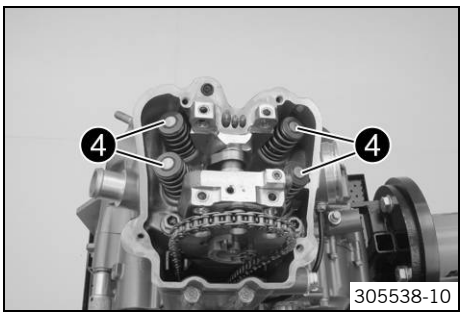


– Remove shims ❹ and set them down according to the installation position.
– Correct the shims as indicated by the results of the valve clearance check.
– Insert suitable shims.

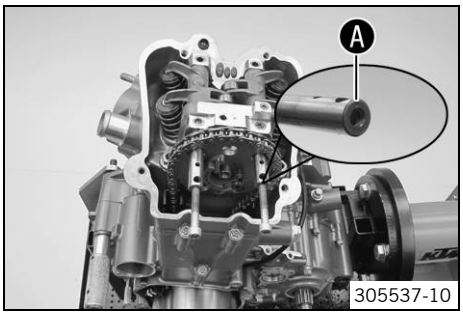


– Position the rocker arms and mount the rocker arm shafts.
  ✔ The tapped hole of the rocker arm shaft faces outward.
  ✔ Drill hole Ⓐ and the flat surface face upward.

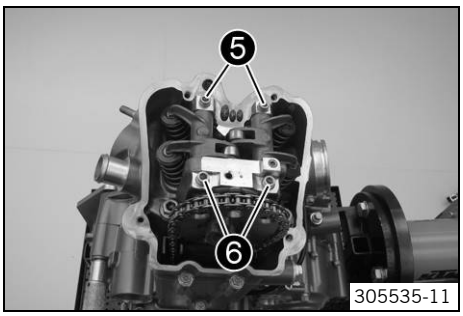


– Mount and tighten screws ❺.
  Guideline

| | | |
|---|---|---|
| Screw, rocker arm shaft | M6x30 | 12 Nm (8.9 lbf ft) |

– Mount and tighten screws ❻.
  Guideline

| | | |
|---|---|---|
| Screw, rocker arm shaft | M6x40 | 12 Nm (8.9 lbf ft) |

– Check the valve clearance. (☛ p. 168)

### 16.5.26 Installing the spark plugs

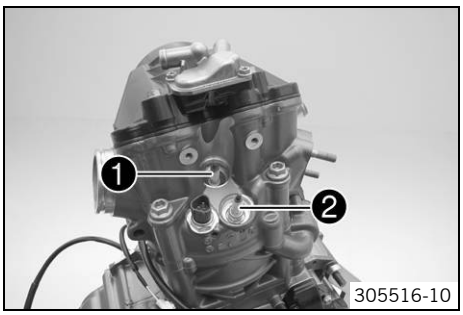


– Mount and tighten spark plug ❶ using the special tool.

Guideline

| | | |
|---|---|---|
| Spark plug inside | M12x1.25 | 18 Nm (13.3 lbf ft) |

| |
|---|
| Spark plug wrench (75029172000) (☛ p. 236) |

– Mount and tighten spark plug ❷ using the special tool.

Guideline

| | | |
|---|---|---|
| Spark plug outside | M10x1 | 11 Nm (8.1 lbf ft) |

| |
|---|
| Spark plug wrench (75029172000) (☛ p. 236) |

### 16.5.27 Installing the thermostat

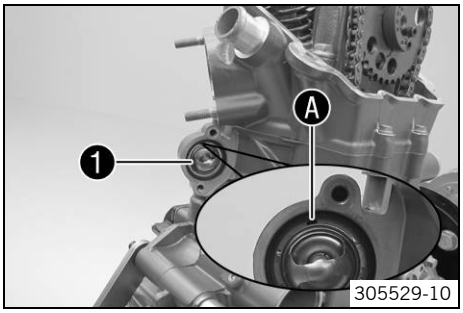


– Position thermostat ❶ with the gasket.

✔ Drill hole Ⓐ must face upward.

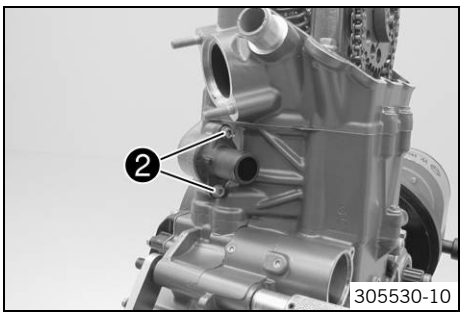


– Position the thermostat case.
– Mount and tighten screws ❷.

Guideline

| | | | |
|---|---|---|---|
| Screw, thermostat case | M6x20 | 10 Nm (7.4 lbf ft) | **Loctite® 243™** |

### 16.5.28 Installing the oil filter

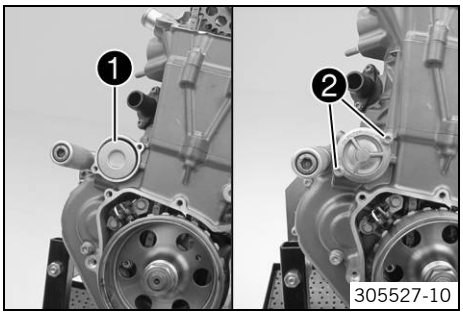


– Insert oil filter ❶.
– Oil the O-ring of the oil filter cover and mount it with the oil filter cover.
– Mount and tighten screws ❷.

Guideline

| | | |
|---|---|---|
| Screw, oil filter cover | M5x16 | 6 Nm (4.4 lbf ft) |

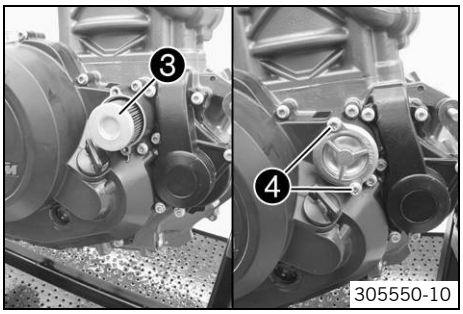


– Insert oil filter ❸.
– Oil the O-ring of the oil filter cover and mount it with the oil filter cover.
– Mount and tighten screws ❹.

Guideline

| | | |
|---|---|---|
| Screw, oil filter cover | M5x16 | 6 Nm (4.4 lbf ft) |

## 16.5.29 Installing the gear position sensor

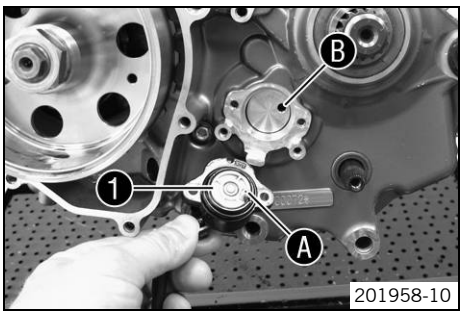


– Mount gear position sensor ❶ with the O-ring.
  ✔ Pin Ⓐ engages in drill hole Ⓑ.

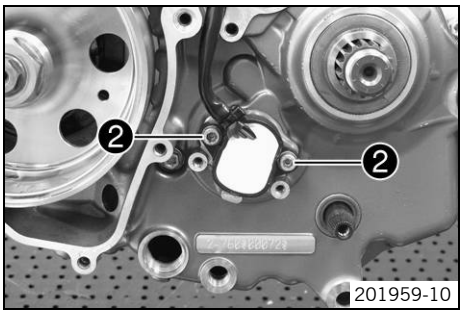


– Mount and tighten screws ❷ with the washers.

Guideline

| | | | |
|---|---|---|---|
| Screw, gear position sensor | M5x16 | 5 Nm (3.7 lbf ft) | **Loctite® 243™** |

## 16.5.30 Installing the spacer

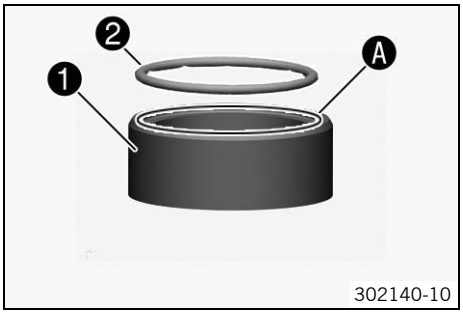


– Grease spacer ❶ in area Ⓐ and O-ring ❷ before mounting.

| |
|---|
| Long-life grease (☛ p. 226) |

– Position the O-ring in the recess of the spacer.

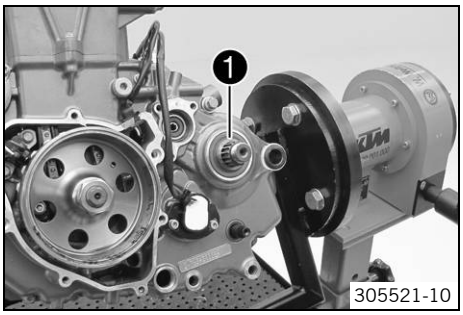


– Grease the shaft seal ring.

| |
|---|
| Long-life grease (☛ p. 226) |

– Slide the spacer with the O-ring onto the countershaft with a twisting motion.
  ✔ The recess with the O-ring faces inward.
  ✔ The shaft seal ring rests against the spacer along its entire circumference.

## 16.5.31 Installing the alternator cover

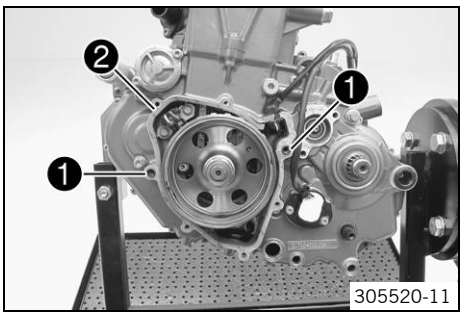


– Apply sealing compound lightly in the area of the cable sleeve.
– Mount dowel ❶ and position the alternator cover gasket ❷.

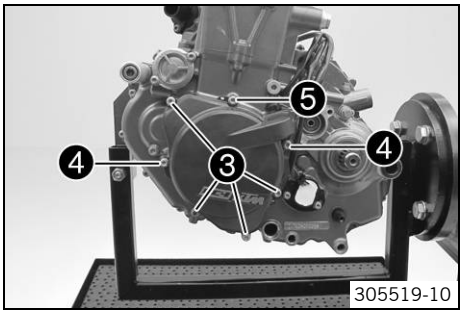


– Position the alternator cover.
– Mount and tighten screws ❸.

Guideline

| | | |
|---|---|---|
| Screw, alternator cover | M6x25 | 10 Nm (7.4 lbf ft) |

– Mount and tighten screws ❹.

Guideline

| | | |
|---|---|---|
| Screw, alternator cover | M6x30 | 10 Nm (7.4 lbf ft) |

– Mount and tighten screw ❺.

Guideline

| | | | |
|---|---|---|---|
| Screw, alternator cover (chain shaft through-hole) | M6x25 | 10 Nm (7.4 lbf ft) | **Loctite® 243™** |

## 16.5.32 Installing oil screens

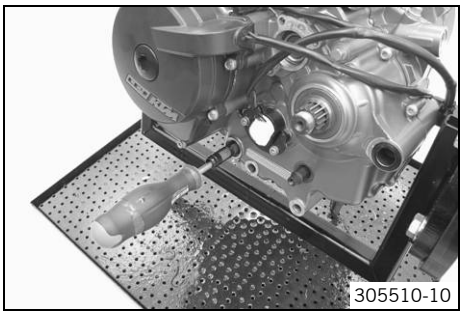


– Push the oil screen with O-rings on to a pin wrench. Push the pin wrench through the opening into the drill hole of the opposite engine case wall and push the oil screen as far as possible into the engine case.

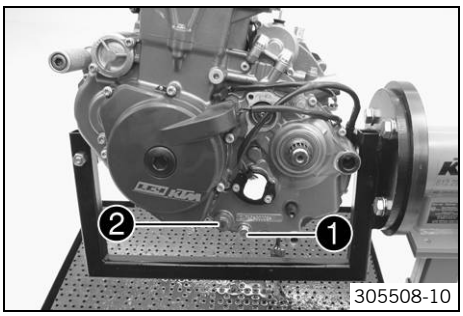


– Mount the oil drain plug ❶ with the magnet and a new seal ring and tighten it.

Guideline

| | | |
|---|---|---|
| Oil drain plug with magnet | M12x1.5 | 20 Nm (14.8 lbf ft) |

– Mount and tighten screw plug ❷ with the O-ring.

Guideline

| | | |
|---|---|---|
| Plug, oil screen | M20x1.5 | 15 Nm (11.1 lbf ft) |

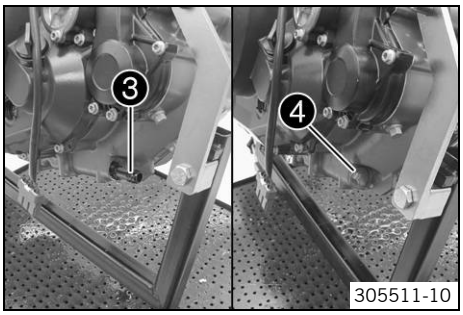


– Position the oil screen ❸ with O-rings.
– Mount and tighten screw plug ❹ with the O-ring.

Guideline

| | | |
|---|---|---|
| Plug, oil screen | M20x1.5 | 15 Nm (11.1 lbf ft) |

## 16.5.33 Installing the starter motor

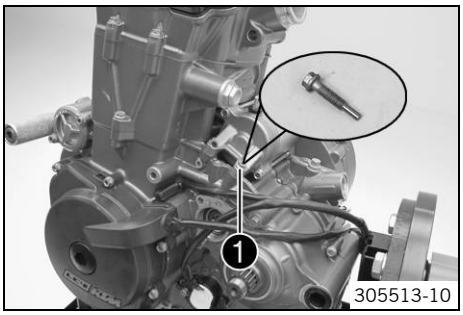


– Grease the O-ring and mount the starter motor.

| |
|---|
| Long-life grease (☛ p. 226) |

– Mount and tighten oil throttle ❶.

Guideline

| | | | |
|---|---|---|---|
| Screw, starter motor with oil throttle | M6 | 10 Nm (7.4 lbf ft) | **Loctite® 243™** |

### 16.5.34 Installing the valve cover

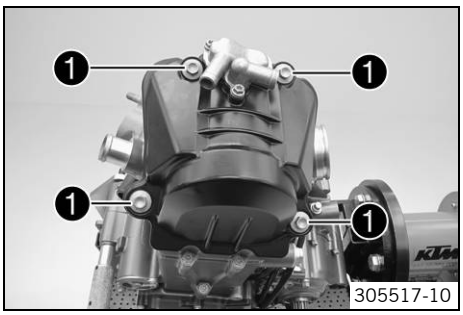


– Position the valve cover with the gasket.
– Mount and tighten screws 1.

Guideline

| | | |
|---|---|---|
| Screw, valve cover | M6 | 10 Nm (7.4 lbf ft) |

### 16.5.35 Removing the engine from the engine assembly stand

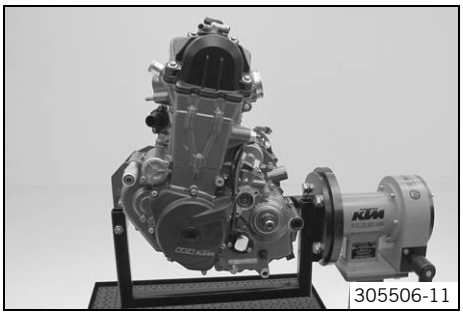


– Remove the engine from the engine assembly stand.

**Info**
Have an assistant help you or use a motorized hoist.

## 17.1 Checking/rectifying the fluid level of the hydraulic clutch

**Info**
The fluid level rises with increasing wear of the clutch lining disc.
Do not use brake fluid.

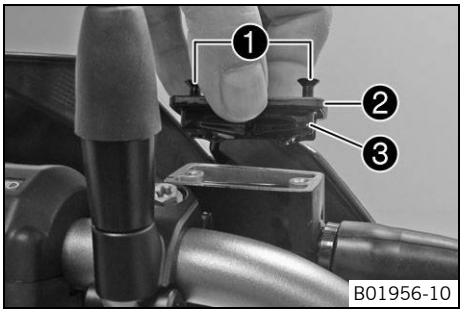


- Move the clutch fluid reservoir mounted on the handlebar to a horizontal position.
- Remove screws ❶.
- Remove cover ❷ with membrane ❸.
- Check the fluid level.

| | |
|---|---|
| Fluid level under top level of container | 4 mm (0.16 in) |

» If the level of the coolant does not meet specifications:
  - Correct the fluid level of the hydraulic clutch.

| |
|---|
| Hydraulic fluid (15) (☛ p. 225) |

- Position the cover with the membrane. Mount and tighten the screws.

## 17.2 Changing the hydraulic clutch fluid

**Warning**
**Environmental hazard** Hazardous substances cause environmental damage.

- Oil, grease, filters, fuel, cleaners, brake fluid, etc., should be disposed of as stipulated in applicable regulations.

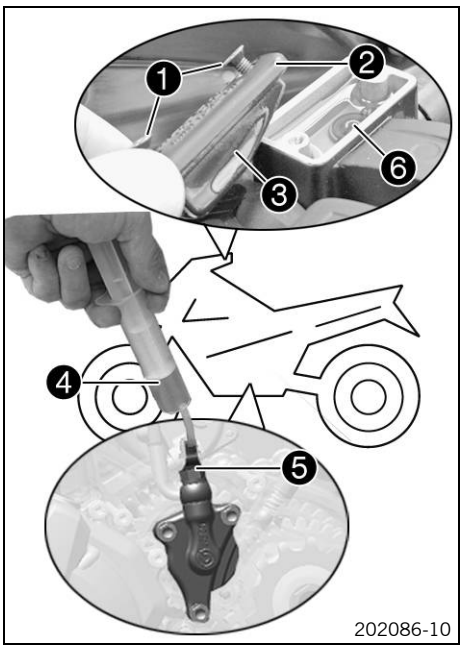


- Move the clutch fluid reservoir mounted on the handlebar to a horizontal position.
- Remove screws ❶.
- Remove cover ❷ with membrane ❸.
- Fill bleeding syringe ❹ with the appropriate hydraulic fluid.

| |
|---|
| Bleed syringe (50329050000) (☛ p. 229) |
| Hydraulic fluid (15) (☛ p. 225) |

- On the clutch slave cylinder, remove bleeder screw ❺ and mount bleeding syringe ❹.
- Inject the liquid into the system until it escapes from hole ❻ of the master cylinder without bubbles.
- To prevent overflow, drain fluid occasionally from the master cylinder reservoir.
- Remove the bleeding syringe. Mount and tighten the bleeder screw.
- Correct the fluid level of the hydraulic clutch.
  Guideline

| | |
|---|---|
| Fluid level below top edge of container | 4 mm (0.16 in) |

- Position the cover with the membrane. Mount and tighten the screws.

## 18.1 Changing the gear position sensor

**Preparatory work**

– Raise the motorcycle with a lift stand. (☛ p. 11)

**Main work**

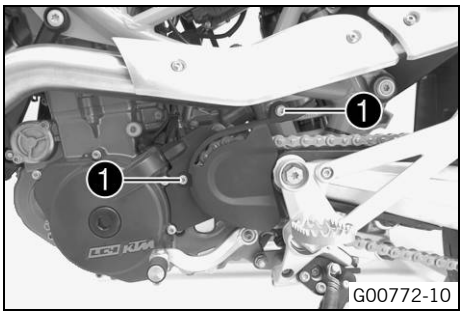


– Remove screw ❶. Take off the engine sprocket cover.

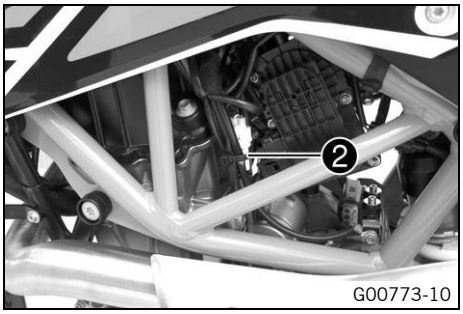


– Remove cable binder ❷.

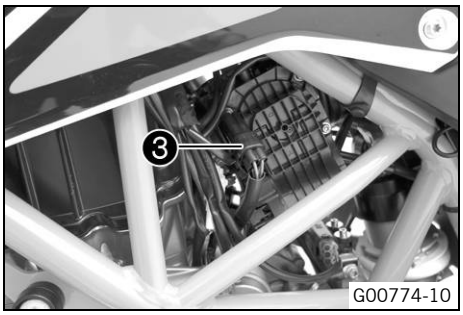


– Disconnect plug-in connector ❸.

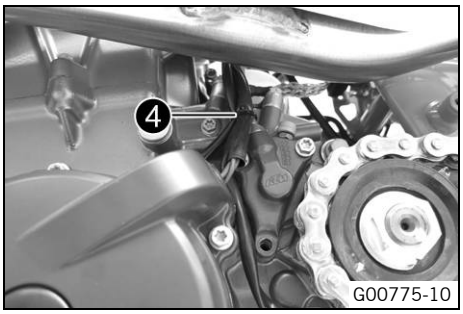


– Remove cable binder ❹.
– Expose the cable.

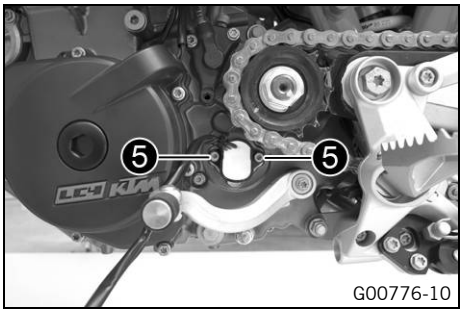


– Remove screws ❺.
– Take off the gear position sensor.

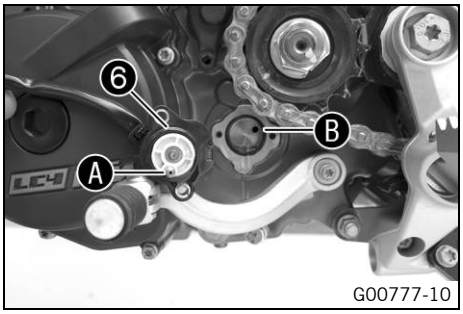


– Lubricate O-ring ❻ of the new gear position sensor.
– Position the gear position sensor.
✔ Pin Ⓐ engages in drill hole Ⓑ.

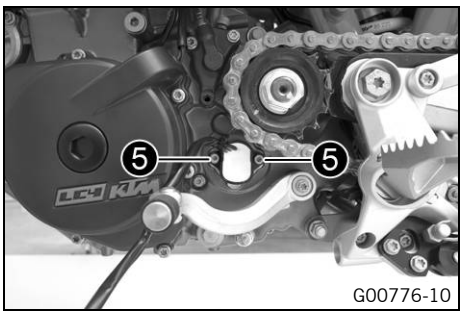


– Mount and tighten screws ❺.

Guideline

| | | | |
|---|---|---|---|
| Screw, gear position sensor | M5x16 | 5 Nm (3.7 lbf ft) | **Loctite® 243™** |

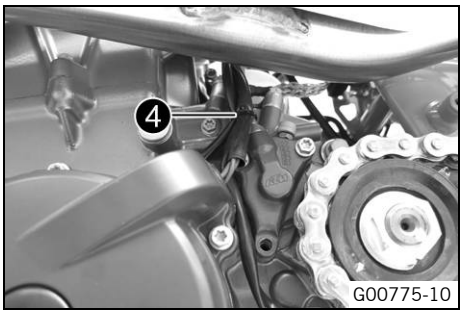


– Secure the wiring harness with cable binder ❹.

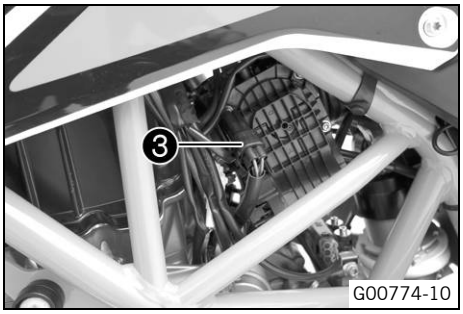


– Connect plug-in connector ❸.
– Route the cable without tension.

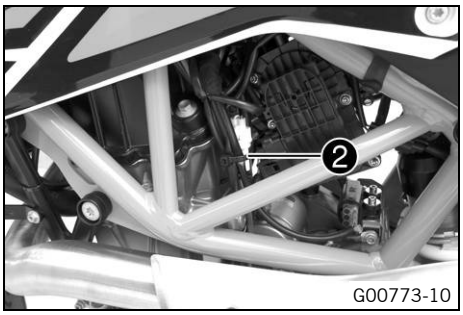


– Secure the connector with cable binder ❷.

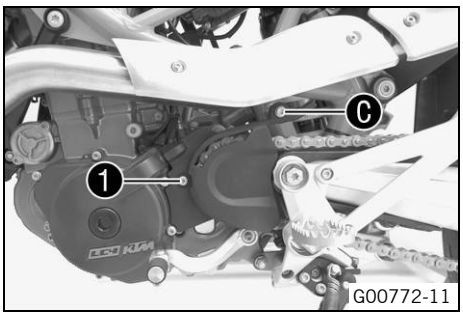


– Position the engine sprocket cover.
– Mount and tighten screw ❶.

Guideline

| | | |
|---|---|---|
| Remaining screws, chassis | M6 | 10 Nm (7.4 lbf ft) |

– Mount and tighten screw Ⓒ.

Guideline

| | | |
|---|---|---|
| Remaining screws, chassis | M8 | 25 Nm (18.4 lbf ft) |

**Finishing work**

– Program the gear position sensor. (☛ p. 177)
– Remove the motorcycle from the lift stand. (☛ p. 11)

## 18.2 Programming the gear position sensor

**Condition**

The diagnostics tool is connected and running.

**Preparatory work**

– Reset the control unit engine electronics KHRS.

**Main work**

– Execute **"Engine electronics"** > **"Functions"** > **"Program the gear position sensor"**.

– Switch to the main menu.

– Switch the ignition off and on again.

✔ The green idling speed indicator lamp **N** lights up.

## 19.1 Draining the coolant

**Warning**

**Danger of scalding** During motorcycle operation, the coolant gets very hot and is under pressure.

– Do not remove the radiator cap, radiator hoses or other cooling system components when the engine is hot. Allow the engine and cooling system to cool down. In case of scalding, rinse immediately with lukewarm water.

**Warning**

**Danger of poisoning** Coolant is poisonous and a health hazard.

– Coolant must not come into contact with the skin, eyes, or clothing. If contact occurs with the eyes, rinse with water immediately and contact a physician. Immediately clean contaminated areas on the skin with soap and water. If coolant is swallowed, contact a physician immediately. Change clothing that is contaminated with coolant. Keep coolant out of reach of children.

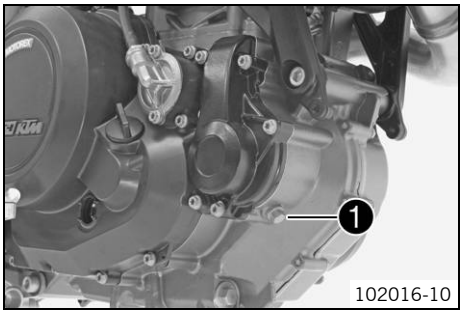


– Stand the motorcycle upright.
– Place a suitable container under the engine.
– Remove screw 1. Take off the radiator cap.
– Completely drain the coolant.
– Mount screw 1 with a new seal ring and tighten it.

Guideline

| | | |
|---|---|---|
| Plug, drain hole of water pump | M10x1 | 15 Nm (11.1 lbf ft) |

## 19.2 Filling/bleeding the cooling system

**Warning**

**Danger of poisoning** Coolant is poisonous and a health hazard.

– Coolant must not come into contact with the skin, eyes, or clothing. If contact occurs with the eyes, rinse with water immediately and contact a physician. Immediately clean contaminated areas on the skin with soap and water. If coolant is swallowed, contact a physician immediately. Change clothing that is contaminated with coolant. Keep coolant out of reach of children.

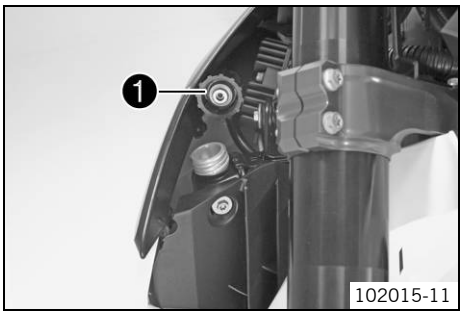


– Stand the motorcycle on its side stand on a horizontal surface.
– Remove radiator cap 1.

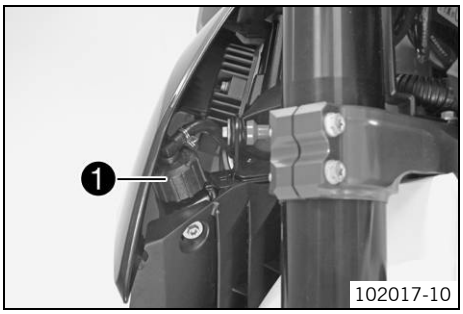


– Refill the coolant.

**Alternative 1**

Coolant (☛ p. 224)

**Alternative 2**

Coolant (mixed ready to use) (☛ p. 224)

– Fill the radiator completely with coolant. Mount radiator cap 1.

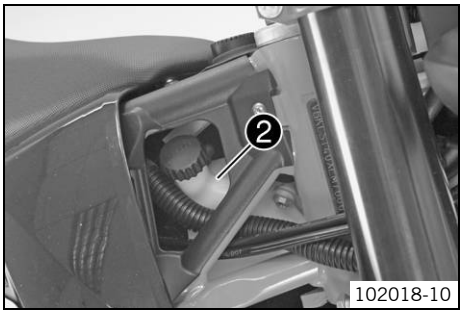


– Remove the cap from compensating tank ❷ and add coolant to the level shown in the figure.
– Mount the cap of the compensating tank.

**Danger**
**Danger of poisoning** Exhaust gases are toxic and inhaling them may result in unconsciousness and/or death.
  – When running the engine, always make sure there is sufficient ventilation, and do not start or run the engine in an enclosed space without an effective exhaust extraction system.

– Start the engine and run it until the 5th bar of the temperature indicator lights up.
– Switch off the engine and allow it to cool down.
– After the engine has cooled down, check the coolant level in the radiator and in the compensating tank again and add more coolant if necessary.
– Check the coolant level. (☛ p. 180)

## 19.3 Checking the antifreeze and coolant level

**Warning**
**Danger of scalding** During motorcycle operation, the coolant gets very hot and is under pressure.
  – Do not remove the radiator cap, radiator hoses or other cooling system components when the engine is hot. Allow the engine and cooling system to cool down. In case of scalding, rinse immediately with lukewarm water.

**Warning**
**Danger of poisoning** Coolant is poisonous and a health hazard.
  – Coolant must not come into contact with the skin, eyes, or clothing. If contact occurs with the eyes, rinse with water immediately and contact a physician. Immediately clean contaminated areas on the skin with soap and water. If coolant is swallowed, contact a physician immediately. Change clothing that is contaminated with coolant. Keep coolant out of reach of children.

**Condition**
Engine is cold.

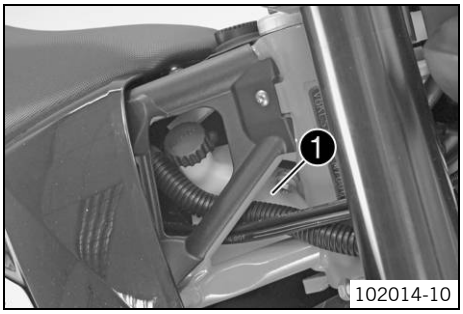


– Stand the motorcycle on its side stand on a horizontal surface.
– Remove the cap of compensating tank ❶.
– Check antifreeze of coolant.

| |
|---|
| −25… −45 °C (−13… −49 °F) |

  » If the antifreeze of the coolant does not meet specifications:
    – Correct the antifreeze of the coolant.
– Check the coolant level in the compensating tank.

| |
|---|
| The coolant level must be within the range shown in the figure. |

  » If the coolant level does not meet specifications:
    – Correct the coolant level.

**Alternative 1**

| |
|---|
| Coolant (☛ p. 224) |

**Alternative 2**

| |
|---|
| Coolant (mixed ready to use) (☛ p. 224) |

– Mount the cap of the compensating tank.

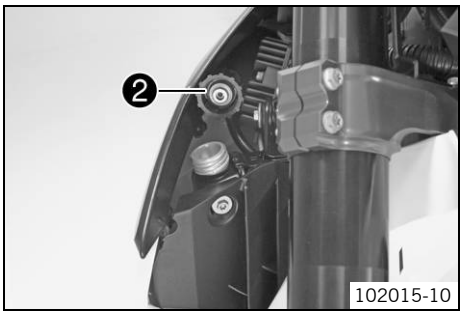


– Screw off the radiator cap ❷.
– Check antifreeze of coolant.

| |
|---|
| −25… −45 °C (−13… −49 °F) |

  » If the antifreeze of the coolant does not meet specifications:
    – Correct the antifreeze of the coolant.
– Check the coolant level in the radiator.

| |
|---|
| The radiator must be completely filled. |

» If the coolant level does not meet specifications:

– Correct the coolant level and find out the cause of the loss.

**Alternative 1**

Coolant (☛ p. 224)

**Alternative 2**

Coolant (mixed ready to use) (☛ p. 224)

– Mount the radiator cap.

## 19.4 Checking the coolant level

**Warning**

**Danger of scalding** During motorcycle operation, the coolant gets very hot and is under pressure.

– Do not remove the radiator cap, radiator hoses or other cooling system components when the engine is hot. Allow the engine and cooling system to cool down. In case of scalding, rinse immediately with lukewarm water.

**Warning**

**Danger of poisoning** Coolant is poisonous and a health hazard.

– Coolant must not come into contact with the skin, eyes, or clothing. If contact occurs with the eyes, rinse with water immediately and contact a physician. Immediately clean contaminated areas on the skin with soap and water. If coolant is swallowed, contact a physician immediately. Change clothing that is contaminated with coolant. Keep coolant out of reach of children.

**Condition**

Engine is cold.

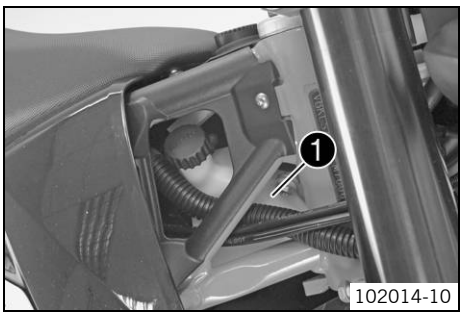


– Stand the motorcycle on its side stand on a horizontal surface.

– Check the coolant level in the compensating tank ❶.

The coolant level must be within the range shown in the figure.

» If the coolant level does not meet specifications:

– Correct the coolant level.

**Alternative 1**

Coolant (☛ p. 224)

**Alternative 2**

Coolant (mixed ready to use) (☛ p. 224)

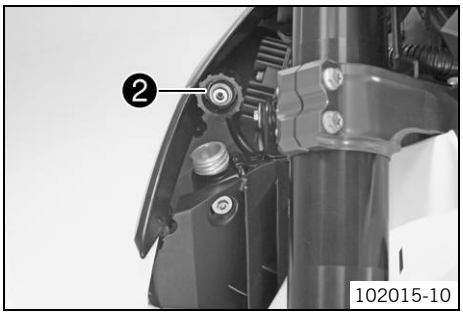


– Screw off the radiator cap ❷ and check the coolant level in the radiator.

The radiator must be completely filled.

» If the coolant level does not meet specifications:

– Correct the coolant level and find out the cause of the loss.

**Alternative 1**

Coolant (☛ p. 224)

**Alternative 2**

Coolant (mixed ready to use) (☛ p. 224)

– Mount the radiator cap.

## 20.1 Oil circuit

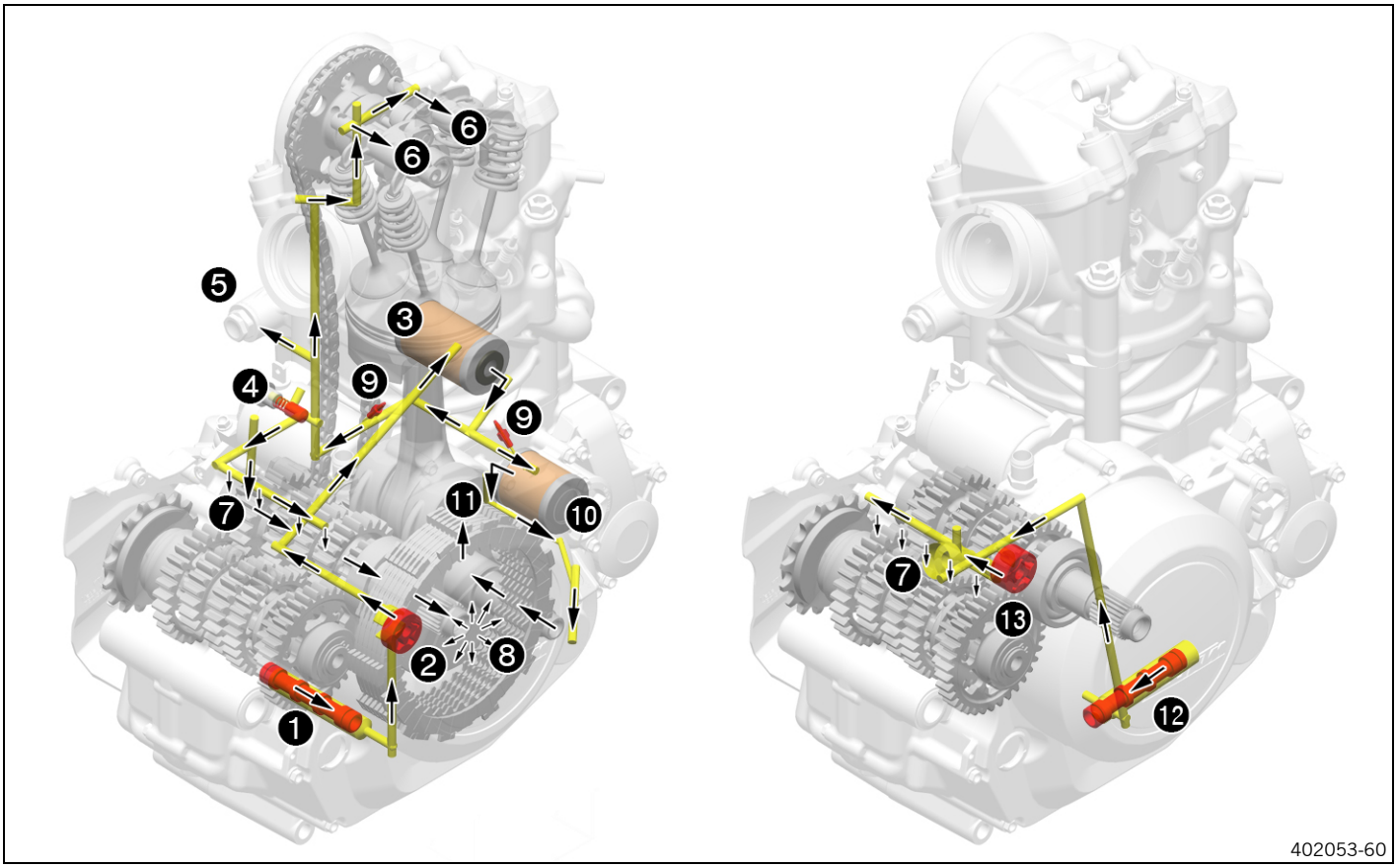


| Oil circuit of force pump | |
|---|---|
| 1 | Oil screen |
| 2 | Force pump |
| 3 | Oil filter |
| 4 | Oil pressure regulator valve |
| 5 | Timing chain tensioner |
| 6 | Rocker arm shaft |
| 7 | Transmission |
| 8 | Clutch |
| 9 | Oil jet for piston cooling |
| 10 | Oil filter |
| 11 | Oil nozzle for conrod bearing lubrication |
| **Oil circuit of suction pump** | |
| 12 | Oil screen |
| 13 | Suction pump |
| 7 | Transmission |

## 20.2 Checking the engine oil level

**Info**
The engine oil level must be checked when the engine is warm.

**Condition**
The engine is at operating temperature.

**Preparatory work**
– Stand the motorcycle upright on a horizontal surface.

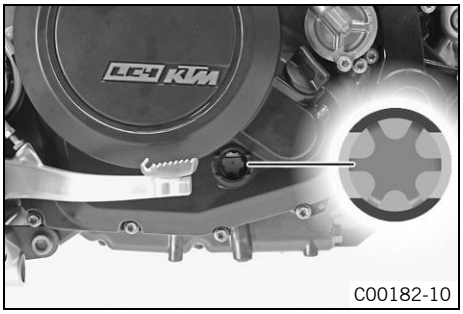


**Main work**

– Check the engine oil level.

**Info**
After switching off the engine, wait one minute before checking the level.

| |
|---|
| The engine oil must be between the lower and upper edge of the oil level viewer. |

» If the engine oil level is not at the specified level:
  – Add the engine oil. (☛ p. 186)

## 20.3 Checking the engine oil pressure

**Warning**
**Danger of scalding** Engine oil and gear oil get very hot when the motorcycle is ridden.

– Wear appropriate protective clothing and safety gloves. In case of burns, rinse immediately with lukewarm water.

**Warning**
**Environmental hazard** Hazardous substances cause environmental damage.

– Oil, grease, filters, fuel, cleaners, brake fluid, etc., should be disposed of as stipulated in applicable regulations.

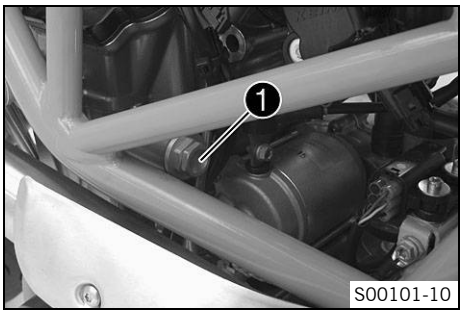


**Main work**

– Remove screw ❶.

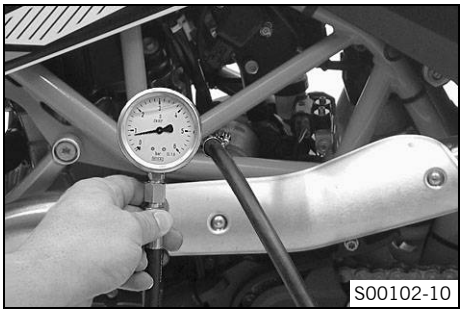


– Position the banjo bolt with the connector and sealing rings. Mount and tighten the banjo bolt.

Guideline

| | | |
|---|---|---|
| Banjo bolt | M10x1 | 8 Nm (5.9 lbf ft) |

| |
|---|
| Oil pressure adapter (77329006000) (☛ p. 237) |

– Connect the pressure tester to the special tool without the T-plate.

| |
|---|
| Pressure testing tool (61029094000) (☛ p. 232) |

– Check the engine oil level. (☛ p. 181)

**Danger**
**Danger of poisoning** Exhaust gases are toxic and inhaling them may result in unconsciousness and/or death.

  – When running the engine, always make sure there is sufficient ventilation, and do not start or run the engine in an enclosed space without an effective exhaust extraction system.

– Start the engine and let it run warm.
– Check the engine oil pressure.

| Engine oil pressure | |
|---|---|
| Coolant temperature: ≥ 70 °C (≥ 158 °F)<br>Engine speed: 1,500 rpm | ≥ 0.4 bar (≥ 6 psi) |
| Coolant temperature: ≥ 70 °C (≥ 158 °F)<br>Engine speed: 5,000 rpm | ≥ 1.5 bar (≥ 22 psi) |

» If the specification is not reached:

  - Change the oil filter. Check the oil pumps for wear. Check that all oil holes are clear.
- Switch off the engine.

**Warning**
**Danger of burns** Some vehicle components get very hot when the machine is driven.
  - Wear appropriate protective clothing and safety gloves. In case of burns, rinse immediately with lukewarm water.

- Remove the special tools.
- Mount and tighten screw ❶.

Guideline

| | | |
|---|---|---|
| Screw, unlocking of timing chain tensioner | M10x1 | 10 Nm (7.4 lbf ft) |

**Finishing work**
- Check the engine oil level. (☛ p. 181)

## 20.4 Changing the engine oil and filter, cleaning the oil screens

601022-10

- Drain the engine oil. (☛ p. 183)
- Remove the oil filter. (☛ p. 184)
- Clean the oil screens. (☛ p. 185)
- Install the oil filter. (☛ p. 184)
- Fill up with engine oil. (☛ p. 186)

## 20.5 Draining the engine oil

**Warning**
**Danger of scalding** Engine oil and gear oil get very hot when the motorcycle is ridden.
- Wear appropriate protective clothing and safety gloves. In case of burns, rinse immediately with lukewarm water.

**Warning**
**Environmental hazard** Hazardous substances cause environmental damage.
- Oil, grease, filters, fuel, cleaners, brake fluid, etc., should be disposed of as stipulated in applicable regulations.

**Info**
Drain the engine oil only when the engine is warm.

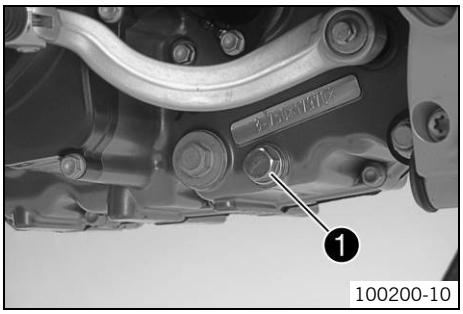

100200-10

- Place a suitable container under the engine.
- Remove the oil drain plug ❶ with the magnet and seal ring.
- Completely drain the engine oil.

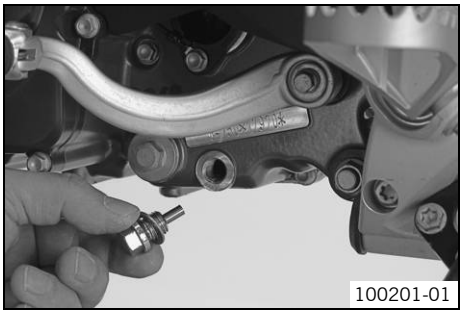
100201-01

– Thoroughly clean the oil drain plug with a magnet.
– Mount the oil drain plug with the magnet and seal ring and tighten it.
Guideline

| | | |
|---|---|---|
| Oil drain plug with magnet | M12x1.5 | 20 Nm (14.8 lbf ft) |

## 20.6 Removing the oil filter

**Warning**
**Danger of scalding** Engine oil and gear oil get very hot when the motorcycle is ridden.
– Wear appropriate protective clothing and safety gloves. In case of burns, rinse immediately with lukewarm water.

**Warning**
**Environmental hazard** Hazardous substances cause environmental damage.
– Oil, grease, filters, fuel, cleaners, brake fluid, etc., should be disposed of as stipulated in applicable regulations.

**Preparatory work**
– Place a suitable container under the engine.

**Main work**
– Remove screws ❶. Remove the oil filter cover ❷ with the O-ring.
– Pull oil filter ❸ out of the oil filter housing.

| |
|---|
| Circlip pliers reverse (51012011000) (☛ p. 229) |

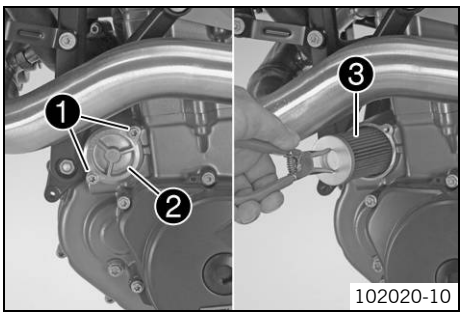

102020-10

– Remove screws ❹. Take off the oil filter cover ❺ with the O-ring.
– Pull oil filter ❻ out of the oil filter housing.

| |
|---|
| Circlip pliers reverse (51012011000) (☛ p. 229) |

– Completely drain the engine oil.
– Thoroughly clean the parts and sealing area.

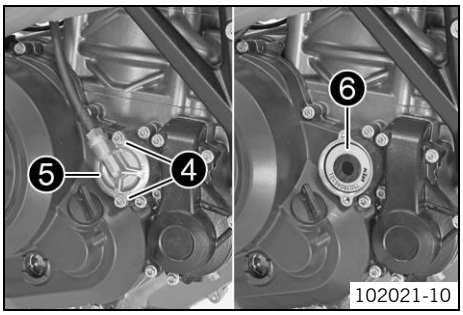

102021-10

## 20.7 Installing the oil filter

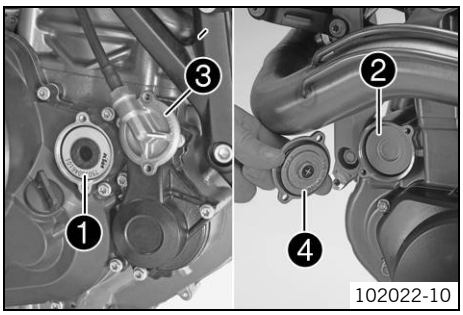

102022-10

– Insert oil filters ❶ and ❷.
– Oil the O-rings of the oil filter covers. Mount oil filter covers ❸ and ❹.
– Mount and tighten the screws.
Guideline

| | | |
|---|---|---|
| Screw, oil filter cover | M5x16 | 6 Nm (4.4 lbf ft) |

## 20.8 Cleaning the oil screens

**Warning**
**Danger of scalding** Engine oil and gear oil get very hot when the motorcycle is ridden.

– Wear appropriate protective clothing and safety gloves. In case of burns, rinse immediately with lukewarm water.

**Warning**
**Environmental hazard** Hazardous substances cause environmental damage.

– Oil, grease, filters, fuel, cleaners, brake fluid, etc., should be disposed of as stipulated in applicable regulations.

**Preparatory work**
– Place a suitable container under the engine.

**Main work**
– Remove screw plug ❶ with oil screen ❷ and the O-rings.

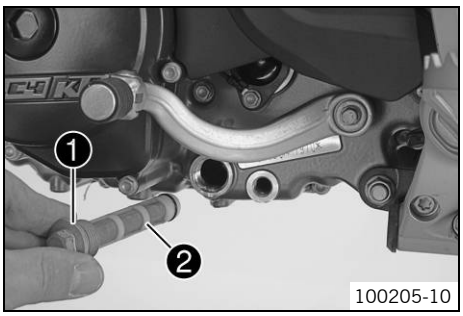

100205-10

– Remove screw plug ❸ with oil screen ❹ and the O-rings.
– Completely drain the remaining engine oil.
– Thoroughly clean the parts and sealing area.

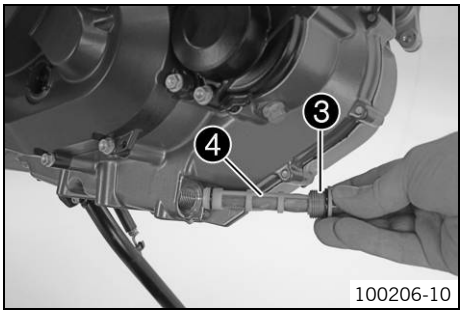

100206-10

– Position oil screen ❷ with the O-rings.
– Mount and tighten screw plug ❶ with the O-ring.
Guideline

| | | |
|---|---|---|
| Plug, oil screen | M20x1.5 | 15 Nm<br>(11.1 lbf ft) |

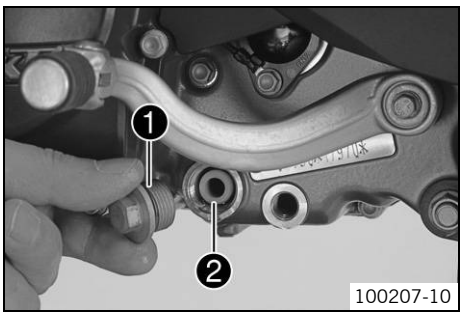

100207-10

– Position oil screen ❹ with the O-rings.
– Mount and tighten screw plug ❸ with the O-ring.
Guideline

| | | |
|---|---|---|
| Plug, oil screen | M20x1.5 | 15 Nm<br>(11.1 lbf ft) |

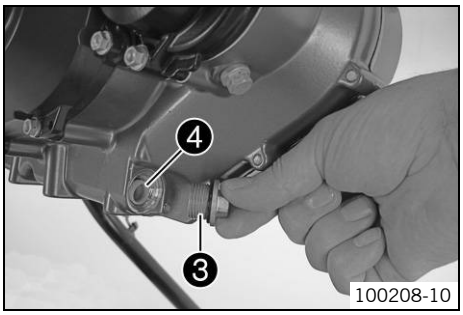

100208-10

## 20.9 Filling up with engine oil

**Info**
Too little engine oil or poor-quality engine oil results in premature wear to the engine.

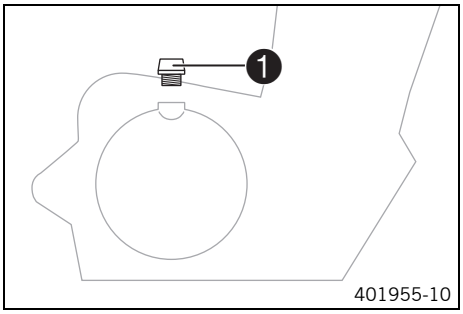


**Main work**

– Remove filler plug with O-ring ❶ from the clutch cover and add engine oil.

| | | | |
|---|---|---|---|
| Engine oil | 1.70 l (1.8 qt.) | Engine oil (SAE 10W/60) (00062010035) (☛ p. 224) | |
| | | Alternative engine oil | Engine oil (SAE 10W/50) (☛ p. 224) |

– Refit plug with O-ring ❶ and tighten it.

**Danger**
**Danger of poisoning** Exhaust gases are toxic and inhaling them may result in unconsciousness and/or death.
– When running the engine, always make sure there is sufficient ventilation, and do not start or run the engine in an enclosed space without an effective exhaust extraction system.

– Start the engine and check that it is oil-tight.

**Finishing work**

– Check the engine oil level. (☛ p. 181)

## 20.10 Adding engine oil

**Info**
Too little engine oil or poor-quality engine oil results in premature wear to the engine.

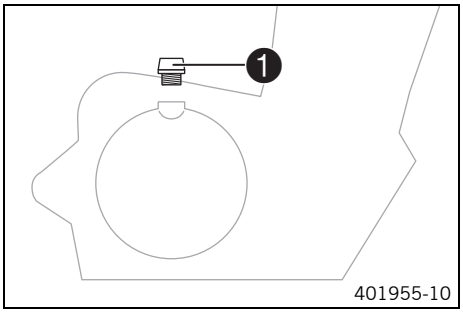


**Main work**

– Remove the oil filler plug ❶ with the O-ring from the clutch cover and fill up with engine oil.

| |
|---|
| Engine oil (SAE 10W/60) (00062010035) (☛ p. 224) |
| Engine oil (SAE 10W/50) (☛ p. 224) |

**Info**
For optimal performance of the engine oil, do not mix different types of engine oil.
If appropriate, change the engine oil.

– Install and tighten the oil filler plug ❶ with the O-ring.

**Danger**
**Danger of poisoning** Exhaust gases are toxic and inhaling them may result in unconsciousness and/or death.
– When running the engine, always make sure there is sufficient ventilation, and do not start or run the engine in an enclosed space without an effective exhaust extraction system.

– Start the engine and check that it is oil-tight.

**Finishing work**

– Check the engine oil level. (☛ p. 181)

## 21.1 Alternator - checking the stator winding

**Condition**
The stator is disconnected.

**Preparatory work**
– Remove the seat. (☛ p. 61)
– Take off the side cover. (☛ p. 62)

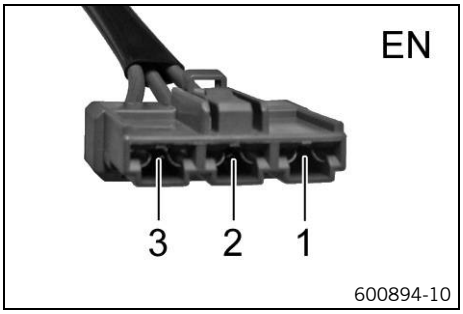


**Main work**
**Stator winding, measurement I - check the resistance**
– Ω Measure the resistance between the specified points.
Stator, connector **EN** pin **1** – Stator, connector **EN** pin **2**

| Alternator | |
|---|---|
| Resistance of stator winding at: 20 °C (68 °F) | ≤ 1 Ω |

» If the displayed value is not equal to the setpoint value:
– Replace the stator.

**Stator winding, measurement II - check the resistance**
– Ω Measure the resistance between the specified points.
Stator, connector **EN** pin **1** – Stator, connector **EN** pin **3**

| Alternator | |
|---|---|
| Resistance of stator winding at: 20 °C (68 °F) | ≤ 1 Ω |

» If the displayed value is not equal to the setpoint value:
– Replace the stator.

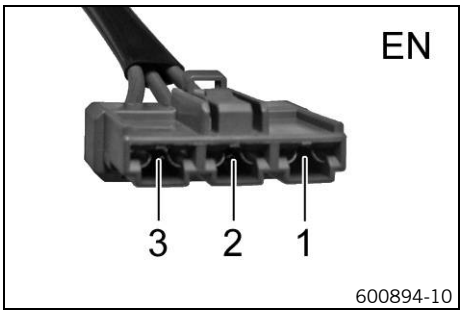


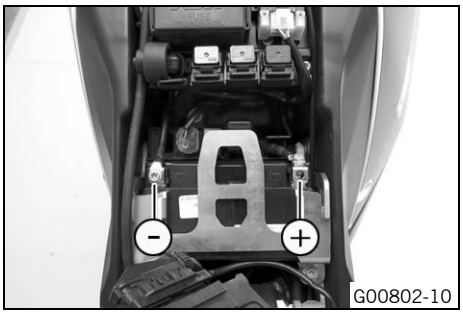


**Stator winding - check for a short circuit to ground (terminal 31)**
– Ω Measure the resistance between the specified points.
Stator, connector **EN** pin **1** – Measuring point **Ground (–)**

| Resistance | ∞ Ω |
|---|---|

» If the displayed value is not equal to the setpoint value:
– Replace the stator.

## 21.2 Checking the spark plug connector

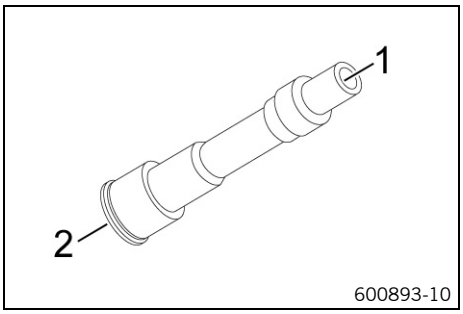


**Condition**
Spark plug connector cylinder 1 has been removed.
– Ω Measure the resistance between the specified points.
Measuring point 1 – Measuring point 2

| Spark plug connector | |
|---|---|
| Resistance at: 20 °C (68 °F) | 4.3… 5.7 kΩ |

» If the specification is not reached:
– Change the spark plug connector.

## 21.3 Ignition coil – checking the secondary winding

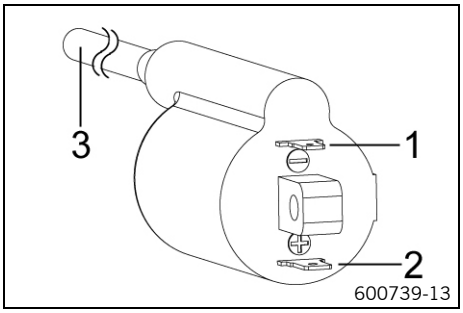


**Condition**

Ignition coil cylinder 1 is disconnected.
Spark plug connector cylinder 1 has been removed.

**Preparatory work**

– Remove the seat. (☛ p. 61)
– Take off the side cover. (☛ p. 62)

**Main work**

**Ignition coil cylinder 1 – check the secondary winding resistance**

– Ω Measure the resistance between the specified points.
Ignition coil pin **2 (+)** – Ignition coil pin **3**

| Ignition coil | |
|---|---|
| Resistance of secondary winding at: 20 °C (68 °F) | 10.4… 15.6 kΩ |

» If the displayed value does not correspond to the nominal value:
  – Change the ignition coil.

## 22.1 Performing the initialization run

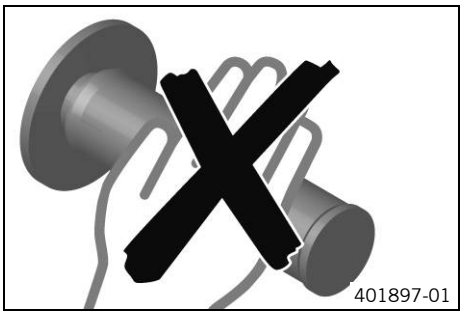


**Condition**

The diagnostics tool is connected and running.

– Execute **"Engine electronics"** > **"Functions"** > **"Delete adaptation values"**.

✔ The adaptation values are deleted.

– Switch off ignition.

– Disconnect the diagnostics tool.

**Danger**

**Danger of poisoning** Exhaust gases are toxic and inhaling them may result in unconsciousness and/or death.

– When running the engine, always make sure there is sufficient ventilation, and do not start or run the engine in an enclosed space without an effective exhaust extraction system.

– Start the engine without activating the throttle grip.

Guideline

| | |
|---|---|
| Coolant temperature | < 25 °C (< 77 °F) |

– Let the engine idle for at least 10 minutes (600 seconds).

**Info**

Do not activate the throttle grip during the initialization process.

– Switch off the ignition after 10 minutes (600 seconds).

**Info**

If initialization is not completed or if the initialization process was interrupted, the entire process must be restarted.

# 23 TECHNICAL DATA

## 23.1 Engine

| | |
|---|---|
| Design | 1-cylinder 4-stroke engine, water-cooled |
| Displacement | 690 cm³ (42.11 cu in) |
| Stroke | 84.5 mm (3.327 in) |
| Bore | 102 mm (4.02 in) |
| Compression ratio | 12.6:1 |
| Control | OHC, 4 valves controlled via rocker arm, chain drive |
| Valve diameter, intake | 40 mm (1.57 in) |
| Valve diameter, exhaust | 34 mm (1.34 in) |
| Valve play, cold | 0.07… 0.13 mm (0.0028… 0.0051 in) |
| Crankshaft bearing | 2 roller bearings |
| Conrod bearing | Needle bearing |
| Piston pin bearing | Piston pin with **DLC** coating |
| Pistons | Forged light alloy |
| Piston rings | 1 L-ring, 1 tapered compression piston ring, 1 oil scraper ring |
| Engine lubrication | Semi-dry sump lubrication system with two rotor pumps |
| Primary transmission | 36:79 |
| Clutch | **APTC™** antihopping clutch in oil bath/hydraulically operated |
| Transmission | 6-gear, claw shifted |
| Transmission ratio | |
| 1st gear | 14:35 |
| 2nd gear | 16:28 |
| 3rd gear | 21:28 |
| 4th gear | 21:23 |
| 5th gear | 23:22 |
| 6th gear | 23:20 |
| Mixture preparation | Electronic fuel injection |
| Ignition | Contactless controlled fully electronic ignition with digital ignition adjustment |
| Alternator | 12 V, 224 W |
| Spark plug | |
| Inside spark plug | NGK LKAR8BI-9 |
| Outside spark plug | NGK LMAR7A-9 |
| Spark plug electrode gap | 0.9 mm (0.035 in) |
| Cooling | Water cooling, permanent circulation of coolant by water pump |
| Idle speed | |
| Coolant temperature: ≥ 70 °C (≥ 158 °F) | 1,550… 1,650 rpm |
| Starting aid | Electric starter, automatic decompressor |

## 23.2 Engine tolerance, wear limits

| | |
|---|---|
| Camshafts - diameter, bearing pin | |
| Next to exhaust cam | ≥ 39.95 mm (≥ 1.5728 in) |
| Next to inlet cam | ≥ 17.96 mm (≥ 0.7071 in) |
| Valve spring | |
| Minimum length (without valve spring cap) | 42.3 mm (1.665 in) |
| Valve spring cap - thickness | 2.4… 2.5 mm (0.094… 0.098 in) |
| Valve - valve stem diameter | |
| Exhaust | ≥ 5.93 mm (≥ 0.2335 in) |
| Intake | ≥ 5.93 mm (≥ 0.2335 in) |
| Valve guide - diameter | |
| New condition | 6.004… 6.016 mm (0.23638… 0.23685 in) |
| Wear limit | 6.050 mm (0.23819 in) |

| | |
|---|---|
| Valve - sealing seat width | |
| Intake | 1.60 mm (0.063 in) |
| Exhaust | 2.00 mm (0.0787 in) |
| Valve - run-out | |
| On the valve plate | ≤ 0.05 mm (≤ 0.002 in) |
| On the valve stem | ≤ 0.05 mm (≤ 0.002 in) |
| Cylinder/cylinder head - sealing area distortion | ≤ 0.10 mm (≤ 0.0039 in) |
| Cylinder - bore diameter | |
| Size I | 102.000… 102.012 mm (4.01574… 4.01621 in) |
| Size II | 102.013… 102.025 mm (4.01625… 4.01672 in) |
| Piston - diameter | |
| Size I | 101.955… 101.965 mm (4.01397… 4.01436 in) |
| Size II | 101.965… 101.975 mm (4.01436… 4.01476 in) |
| Piston/cylinder - mounting clearance | |
| New condition | 0.035… 0.060 mm (0.00138… 0.00236 in) |
| Wear limit | 0.10 mm (0.0039 in) |
| Piston ring - groove clearance | ≤ 0.08 mm (≤ 0.0031 in) |
| Piston ring end gap | |
| Compression rings | ≤ 0.80 mm (≤ 0.0315 in) |
| Oil scraper ring | ≤ 1.00 mm (≤ 0.0394 in) |
| Piston - piston pin hole diameter | 20.010… 20.020 mm (0.78779… 0.78819 in) |
| Piston pin - diameter | 19.995… 20.004 mm (0.7872… 0.78756 in) |
| Connecting rod - axial clearance of lower conrod bearing | 0.30… 0.60 mm (0.0118… 0.0236 in) |
| Connecting rod - radial clearance of lower conrod bearing | 0.05 mm (0.002 in) |
| Crankshaft - axial clearance | 0.15… 0.25 mm (0.0059… 0.0098 in) |
| Crankshaft run-out at bearing pin | ≤ 0.10 mm (≤ 0.0039 in) |
| Balancer shaft axial clearance | 0.05… 0.20 mm (0.002… 0.0079 in) |
| Clutch facing disc - thickness | ≥ 2.5 mm (≥ 0.098 in) |
| Intermediate disk - thickness | ≥ 1.35 mm (≥ 0.0531 in) |
| Clutch spring - length | 31.5… 33.5 mm (1.24… 1.319 in) |
| Clutch basket - contact surface of clutch facing discs | ≤ 0.5 mm (≤ 0.02 in) |
| Oil pressure regulator valve - minimum spring length | 25.36 mm (0.9984 in) |
| Oil pump | |
| Clearance between external rotor and engine case | ≤ 0.20 mm (≤ 0.0079 in) |
| Clearance between external rotor and internal rotor | ≤ 0.20 mm (≤ 0.0079 in) |
| Axial clearance | 0.04… 0.08 mm (0.0016… 0.0031 in) |
| Engine oil pressure | |
| Coolant temperature: ≥ 70 °C (≥ 158 °F)<br>Engine speed: 1,500 rpm | ≥ 0.4 bar (≥ 6 psi) |
| Coolant temperature: ≥ 70 °C (≥ 158 °F)<br>Engine speed: 5,000 rpm | ≥ 1.5 bar (≥ 22 psi) |
| Main shaft axial clearance | 0.10… 0.40 mm (0.0039… 0.0157 in) |
| Transmission shaft run-out | ≤ 0.025 mm (≤ 0.00098 in) |
| Shift shaft - play in sliding plate/shift quadrant | 0.40… 0.80 mm (0.0157… 0.0315 in) |
| Fuel pressure | |
| Under every load condition | 3.3… 3.7 bar (48… 54 psi) |
| Engine oil consumption | |
| After the vehicle is run-in | ≤ 0.7 l/1.000 km (≤ 0.7 qt./600 mi)<br>**Info**<br>The oil consumption depends on the riding style and on the operating conditions. |

## 23.3 Engine tightening torques

| | | | |
|---|---|---|---|
| Screw, membrane fixation | M3 | 2 Nm (1.5 lbf ft) | **Loctite® 243™** |
| Hose clamp, intake flange | M4 | 2.5 Nm (1.84 lbf ft) | – |
| Oil nozzle for conrod bearing lubrication | M4 | 2 Nm (1.5 lbf ft) | **Loctite® 243™** |
| Locking screw for bearing | M5 | 6 Nm (4.4 lbf ft) | **Loctite® 243™** |
| Remaining screws, engine | M5 | 6 Nm (4.4 lbf ft) | – |
| Screw, breather cover on valve cover | M5 | 6 Nm (4.4 lbf ft) | **Loctite® 243™** |
| Screw, clutch spring | M5x25 | 6 Nm (4.4 lbf ft) | – |
| Screw, cover plate for oil return line | M5 | 6 Nm (4.4 lbf ft) | – |
| Screw, gear position sensor | M5x16 | 5 Nm (3.7 lbf ft) | **Loctite® 243™** |
| Screw, oil filter cover | M5x16 | 6 Nm (4.4 lbf ft) | – |
| Screw, oil pump cover, top | M5 | 6 Nm (4.4 lbf ft) | **Loctite® 243™** |
| Cylinder head screw | M6x25 | 10 Nm (7.4 lbf ft) | **Loctite® 243™** |
| Plug, vacuum connection | M6 | 10 Nm (7.4 lbf ft) | **Loctite® 243™** |
| Remaining screws, engine | M6 | 10 Nm (7.4 lbf ft) | – |
| Screw, alternator cover | M6x25 | 10 Nm (7.4 lbf ft) | – |
| Screw, alternator cover (chain shaft through-hole) | M6x25 | 10 Nm (7.4 lbf ft) | **Loctite® 243™** |
| Screw, autodecompression | M6 | 3… 4 Nm (2.2… 3 lbf ft) | **Loctite® 243™** |
| Screw, axial lock of camshaft | M6 | 10 Nm (7.4 lbf ft) | **Loctite® 243™** |
| Screw, clutch cover | M6 | 10 Nm (7.4 lbf ft) | – |
| Screw, clutch slave cylinder | M6x20 | 10 Nm (7.4 lbf ft) | **Loctite® 243™** |
| Screw, clutch slave cylinder | M6x35 | 10 Nm (7.4 lbf ft) | – |
| Screw, crankshaft position sensor | M6x16 | 10 Nm (7.4 lbf ft) | **Loctite® 243™** |
| Screw, cylinder | M6 | 10 Nm (7.4 lbf ft) | **Loctite® 243™** |
| Screw, engine case | M6 | 10 Nm (7.4 lbf ft) | – |
| Screw, ignition coil | M6 | 10 Nm (7.4 lbf ft) | – |
| Screw, locking lever | M6x20 | 10 Nm (7.4 lbf ft) | **Loctite® 243™** |
| Screw, oil pump cover, bottom | M6 | 10 Nm (7.4 lbf ft) | **Loctite® 243™** |
| Screw, rocker arm shaft | M6x30 | 12 Nm (8.9 lbf ft) | – |
| Screw, shift drum locating | M6x30 | 10 Nm (7.4 lbf ft) | **Loctite® 243™** |
| Screw, shift lever | M6 | 14 Nm (10.3 lbf ft) | **Loctite® 243™** |
| Screw, starter motor | M6x20 | 10 Nm (7.4 lbf ft) | **Loctite® 243™** |
| Screw, stator | M6 | 10 Nm (7.4 lbf ft) | **Loctite® 243™** |
| Screw, thermostat case | M6x20 | 10 Nm (7.4 lbf ft) | **Loctite® 243™** |
| Screw, timing chain guide rail | M6x30 | 10 Nm (7.4 lbf ft) | **Loctite® 243™** |
| Screw, timing chain tensioning rail | M6x30 | 10 Nm (7.4 lbf ft) | **Loctite® 243™** |
| Screw, valve cover | M6 | 10 Nm (7.4 lbf ft) | – |
| Screw, water pump cover | M6x30 | 10 Nm (7.4 lbf ft) | – |
| Screw, water pump impeller | M6x15 | 10 Nm (7.4 lbf ft) | **Loctite® 243™** |
| Oil jet, piston cooling | M6x0.75 | 4 Nm (3 lbf ft) | **Loctite® 243™** |
| Screw plug, crankshaft clamp | M8 | 20 Nm (14.8 lbf ft) | – |
| Stud, exhaust flange | M8 | 10 Nm (7.4 lbf ft) | **Loctite® 243™** |

| | | | |
|---|---|---|---|
| Cylinder head screw | M10 | Tightening sequence:<br>Tighten diagonally, beginning with the rear screw on the timing chain shaft.<br>Step 1<br>15 Nm (11.1 lbf ft)<br>Step 2<br>30 Nm (22.1 lbf ft)<br>Step 3<br>45 Nm (33.2 lbf ft)<br>Step 4<br>60 Nm (44.3 lbf ft) | Lubricated with engine oil |
| Oil line for oil pressure sensor | M10x1 | 10 Nm (7.4 lbf ft) | – |
| Oil pressure sensor | M10x1 | 10 Nm (7.4 lbf ft) | – |
| Plug, drain hole of water pump | M10x1 | 15 Nm (11.1 lbf ft) | – |
| Screw plug, oil channel | M10x1 | 15 Nm (11.1 lbf ft) | **Loctite® 243™** |
| Screw plug, oil channel, for oil radiator | M10x1 | 15 Nm (11.1 lbf ft) | – |
| Screw, unlocking of timing chain tensioner | M10x1 | 10 Nm (7.4 lbf ft) | – |
| Spark plug outside | M10x1 | 11 Nm (8.1 lbf ft) | – |
| Spark plug inside | M12x1.25 | 18 Nm (13.3 lbf ft) | – |
| Coolant temperature sensor on cylinder head | M12x1.5 | 12 Nm (8.9 lbf ft) | – |
| Oil drain plug with magnet | M12x1.5 | 20 Nm (14.8 lbf ft) | – |
| Oil pressure regulator valve plug | M12x1.5 | 20 Nm (14.8 lbf ft) | – |
| Screw plug, oil channel | M14x1.5 | 15 Nm (11.1 lbf ft) | **Loctite® 243™** |
| Engine case stud | M16x1.5 | 25 Nm (18.4 lbf ft) | **Loctite® 243™** |
| Rotor nut | M18x1.5 | 100 Nm (73.8 lbf ft) | – |
| Nut, engine sprocket | M20x1.5 | 80 Nm (59 lbf ft) | **Loctite® 243™** |
| Nut, inner clutch hub | M20x1.5 | 100 Nm (73.8 lbf ft) | **Loctite® 243™** |
| Nut, primary gear | M20LHx1.5 | 90 Nm (66.4 lbf ft) | **Loctite® 243™** |
| Plug, oil screen | M20x1.5 | 15 Nm (11.1 lbf ft) | – |
| Plug, timing chain tensioner | M20x1.5 | 25 Nm (18.4 lbf ft) | – |
| Plug, oil thermostat | M24x1.5 | 15 Nm (11.1 lbf ft) | – |
| Screw in alternator cover | M24x1.5 | 8 Nm (5.9 lbf ft) | – |

## 23.4 Capacities

### 23.4.1 Engine oil

| | | | |
|---|---|---|---|
| Engine oil | 1.70 l (1.8 qt.) | Engine oil (SAE 10W/60) (00062010035) (☛ p. 224) | |
| | | Alternative engine oil | Engine oil (SAE 10W/50) (☛ p. 224) |

### 23.4.2 Coolant

| | | |
|---|---|---|
| Coolant | 1.20 l (1.27 qt.) | Coolant (☛ p. 224) |
| | | Coolant (mixed ready to use) (☛ p. 224) |

### 23.4.3 Fuel

| | | |
|---|---|---|
| Total fuel tank capacity, approx. | 12 l (3.2 US gal) | Super unleaded (ROZ 95/RON 95/PON 91) (☛ p. 225) |

| | |
|---|---|
| Fuel reserve, approx. | 2.5 l (2.6 qt.) |

## 23.5 Chassis

| | |
|---|---|
| Frame | Lattice frame made of chrome molybdenum steel tubing, powder-coated |
| Fork | **WP Suspension** 4860 ROTA SPLIT |
| Shock absorber | **WP Suspension** 4618 with **Pro-Lever** deflector |
| Suspension travel | |
| Front | 215 mm (8.46 in) |
| Rear | 250 mm (9.84 in) |
| Brake system | |
| Front | Disc brake with radially screwed four-piston brake caliper, floating brake disc |
| Rear | Disc brake with single-piston brake caliper, floating |
| Brake discs - diameter | |
| Front | 320 mm (12.6 in) |
| Rear | 240 mm (9.45 in) |
| Brake discs - wear limit | |
| Front | 4.0 mm (0.157 in) |
| Rear | 4.5 mm (0.177 in) |
| Tire air pressure, solo | |
| Front | 2.0 bar (29 psi) |
| Rear | 2.0 bar (29 psi) |
| Tire air pressure with passenger / fully loaded | |
| Front | 2.0 bar (29 psi) |
| Rear | 2.2 bar (32 psi) |
| Secondary drive ratio | 16:42 |
| Chain | 5/8 x 1/4” X-ring |
| Steering head angle | 63° |
| Wheelbase | 1,480±15 mm (58.27±0.59 in) |
| Seat height unloaded | 890 mm (35.04 in) |
| Ground clearance unloaded | 270 mm (10.63 in) |
| Weight without fuel, approx. | 144 kg (317 lb.) |
| Maximum permissible front axle load | 150 kg (331 lb.) |
| Maximum permissible rear axle load | 200 kg (441 lb.) |
| Maximum permissible overall weight | 350 kg (772 lb.) |

## 23.6 Electrical system

| | | |
|---|---|---|
| Battery | YTZ10S | Battery voltage: 12 V<br>Nominal capacity: 8.6 Ah<br>maintenance-free |
| Fuse | 58011109130 | 30 A |
| Fuse | 58011109125 | 25 A |
| Fuse | 75011088015 | 15 A |
| Fuse | 75011088010 | 10 A |
| Headlight | H4 / socket P43t | 12 V<br>60/55 W |
| Parking light | W5W / socket W2.1x9.5d | 12 V<br>5 W |
| Instrument lights and indicator lamps | LED | |
| Turn signal | RY10W / socket BAU15s | 12 V<br>10 W |
| Brake/tail light | LED | |
| License plate lamp | W5W / socket W2.1x9.5d | 12 V<br>5 W |

## 23.7 Tires

| Front tires | Rear tires |
|---|---|
| **120/70 R 17 M/C 58H TL**<br>Continental Conti Attack SM | **160/60 R 17 M/C 69H TL**<br>Continental Conti Attack SM |
| Additional information is available in the Service section under:<br>http://www.ktm.com | |

## 23.8 Fork

| | |
|---|---|
| Fork part number | 14.18.8N.25 |
| Fork | **WP Suspension** 4860 ROTA SPLIT |
| Compression damping | |
| Comfort | 20 clicks |
| Standard | 15 clicks |
| Sport | 10 clicks |
| Full payload | 10 clicks |
| Rebound damping | |
| Comfort | 20 clicks |
| Standard | 15 clicks |
| Sport | 10 clicks |
| Full payload | 10 clicks |
| Spring length with preload spacer(s) | 463 mm (18.23 in) |
| Spring rate | |
| Medium (standard) | 5.3 N/mm (30.3 lb/in) |
| Air chamber length | $110^{+20}_{-30}$ mm ($4.33^{+0.79}_{-1.18}$ in) |
| Fork length | 895 mm (35.24 in) |

| | | |
|---|---|---|
| Fork oil per fork leg | 625 ml (21.13 fl. oz.) | Fork oil (SAE 4) (48601166S1) (☛ p. 225) |

## 23.9 Shock absorber

| | |
|---|---|
| Shock absorber part number | 15.18.7L.12 |
| Shock absorber | **WP Suspension** 4618 with **Pro-Lever** deflector |
| Compression damping, high-speed | |
| Comfort | 2 turns |
| Standard | 1.5 turns |
| Sport | 1 turn |
| Full payload | 1 turn |
| Compression damping, low-speed | |
| Comfort | 25 clicks |
| Standard | 20 clicks |
| Sport | 15 clicks |
| Full load capacity | 15 clicks |
| Rebound damping | |
| Comfort | 20 clicks |
| Standard | 15 clicks |
| Sport | 10 clicks |
| Full payload | 10 clicks |
| Spring preload | 20 mm (0.79 in) |
| Spring rate | |
| Medium (standard) | 80 N/mm (457 lb/in) |
| Hard | 85 N/mm (485 lb/in) |
| Spring length | 220 mm (8.66 in) |
| Gas pressure | 10 bar (145 psi) |

| | |
|---|---|
| Static sag | 20… 25 mm (0.79… 0.98 in) |
| Riding sag | 70… 80 mm (2.76… 3.15 in) |
| Fitted length | 395 mm (15.55 in) |

| | |
|---|---|
| Shock absorber fluid | Shock absorber fluid (SAE 2.5) (50180751S1) (☛ p. 225) |

## 23.10 Chassis tightening torques

| | | | |
|---|---|---|---|
| Screw, chain guard | EJOT | 2 Nm (1.5 lbf ft) | – |
| Screw, combination instrument | EJOT | 1 Nm (0.7 lbf ft) | – |
| Screw, license plate holder, bottom | EJOT | 3 Nm (2.2 lbf ft) | – |
| Screw, side cover on spoiler | EJOT | 1 Nm (0.7 lbf ft) | – |
| Screw, side stand switch | EJOT | 2 Nm (1.5 lbf ft) | – |
| Screw, SLS valve | EJOT | 2 Nm (1.5 lbf ft) | – |
| Fitting, side stand switch | M4 | 2 Nm (1.5 lbf ft) | – |
| Spoke nipple, front wheel | M4.5 | 3… 6 Nm (2.2… 4.4 lbf ft) | – |
| Spoke nipple, rear wheel | M4.5 | 3… 6 Nm (2.2… 4.4 lbf ft) | – |
| Bolt, foot brake lever stub | M5 | 6 Nm (4.4 lbf ft) | **Loctite® 243™** |
| Remaining nuts, chassis | M5 | 4 Nm (3 lbf ft) | – |
| Remaining screws, chassis | M5 | 4 Nm (3 lbf ft) | – |
| Screw, brake line holder on swingarm | M5 | 4 Nm (3 lbf ft) | – |
| Screw, cable on starter motor | M5 | 3 Nm (2.2 lbf ft) | – |
| Screw, electrical holder | M5 | 3 Nm (2.2 lbf ft) | – |
| Screw, exhaust heat shield | M5 | 8 Nm (5.9 lbf ft) | **Loctite® 243™** |
| Screw, fuel hose clamp on fuel tank | M5 | 5 Nm (3.7 lbf ft) | – |
| Screw, fuel level sensor | M5 | 3 Nm (2.2 lbf ft) | – |
| Screw, fuel pump | M5 | 4 Nm (3 lbf ft) | – |
| Screw, fuel tank closure flange | M5 | 2.5 Nm (1.84 lbf ft) | – |
| Screw, headlight mask | M5 | 5 Nm (3.7 lbf ft) | – |
| Screw, pressure regulator | M5 | 4 Nm (3 lbf ft) | – |
| Screw, throttle grip | M5 | 3.5 Nm (2.58 lbf ft) | – |
| Remaining nuts, chassis | M6 | 10 Nm (7.4 lbf ft) | – |
| Remaining screws on fuel tank | M6 | 5 Nm (3.7 lbf ft) | – |
| Remaining screws, chassis | M6 | 10 Nm (7.4 lbf ft) | – |
| Screw connection, foot brake cylinder | M6 | 10 Nm (7.4 lbf ft) | – |
| Screw, ABS control unit | M6 | 5 Nm (3.7 lbf ft) | – |
| Screw, air filter box top | M6 | 2 Nm (1.5 lbf ft) | – |
| Screw, ball joint of push rod on foot brake cylinder | M6 | 10 Nm (7.4 lbf ft) | **Loctite® 243™** |
| Screw, brake fluid reservoir of rear brake | M6 | 5 Nm (3.7 lbf ft) | – |
| Screw, chain guard | M6 | 2 Nm (1.5 lbf ft) | **Loctite® 243™** |
| Screw, chain guide | M6 | 8 Nm (5.9 lbf ft) | – |
| Screw, chain sliding guard | M6 | 8 Nm (5.9 lbf ft) | **Loctite® 243™** |
| Screw, fan hood | M6 | 4 Nm (3 lbf ft) | – |
| Screw, front brake disc | M6 | 14 Nm (10.3 lbf ft) | **Loctite® 243™** |
| Screw, ignition lock | M6 | 10 Nm (7.4 lbf ft) | **Loctite® 243™** |
| Screw, lower radiator bracket | M6 | 8 Nm (5.9 lbf ft) | – |
| Screw, magnetic holder on side stand | M6 | 6 Nm (4.4 lbf ft) | **Loctite® 243™** |
| Screw, radiator guard | M6 | 8 Nm (5.9 lbf ft) | – |
| Screw, rear brake disc | M6 | 14 Nm (10.3 lbf ft) | **Loctite® 243™** |
| Screw, seat lock | M6 | 5 Nm (3.7 lbf ft) | – |
| Screw, side cover | M6 | 5 Nm (3.7 lbf ft) | – |
| Screw, upper radiator bracket | M6 | 10 Nm (7.4 lbf ft) | – |

| | | | |
|---|---|---|---|
| Screw, voltage regulator | M6 | 8 Nm (5.9 lbf ft) | – |
| Screw, wheel speed sensor | M6 | 6 Nm (4.4 lbf ft) | – |
| Nut, rear sprocket screw | M8 | 35 Nm (25.8 lbf ft) | **Loctite® 2701™** |
| Remaining nuts, chassis | M8 | 25 Nm (18.4 lbf ft) | – |
| Remaining screws, chassis | M8 | 25 Nm (18.4 lbf ft) | – |
| Screw, bottom triple clamp | M8 | 12 Nm (8.9 lbf ft) | – |
| Screw, chain sliding piece | M8 | 15 Nm (11.1 lbf ft) | – |
| Screw, connection lever on frame | M8 | 30 Nm (22.1 lbf ft) | **Loctite® 243™** |
| Screw, foot brake lever | M8 | 25 Nm (18.4 lbf ft) | **Loctite® 243™** |
| Screw, fork stub | M8 | 15 Nm (11.1 lbf ft) | – |
| Screw, front footrest bracket | M8 | 25 Nm (18.4 lbf ft) | – |
| Screw, fuel tank bracket | M8 | 15 Nm (11.1 lbf ft) | – |
| Screw, fuel tank, bottom | M8 | 25 Nm (18.4 lbf ft) | **Loctite® 243™** |
| Screw, fuel tank, top | M8 | 25 Nm (18.4 lbf ft) | **Loctite® 243™** |
| Screw, handlebar clamp | M8 | 20 Nm (14.8 lbf ft) | – |
| Screw, handrail | M8 | 20 Nm (14.8 lbf ft) | – |
| Screw, heel protector | M8x12 | 5 Nm (3.7 lbf ft) | **Loctite® 243™** |
| Screw, license plate holder, top | M8 | 20 Nm (14.8 lbf ft) | – |
| Screw, main silencer clamp | M8 | 12 Nm (8.9 lbf ft) | Copper paste |
| Screw, main silencer holder | M8 | 25 Nm (18.4 lbf ft) | – |
| Screw, main silencer holder on fuel tank | M8 | 25 Nm (18.4 lbf ft) | – |
| Screw, rear footrest bracket | M8x16 | 25 Nm (18.4 lbf ft) | – |
| Screw, side stand bracket | M8 | 25 Nm (18.4 lbf ft) | **Loctite® 243™** |
| Screw, spring holder on side stand bracket | M8 | 25 Nm (18.4 lbf ft) | **Loctite® 243™** |
| Screw, steering stem | M8 | 20 Nm (14.8 lbf ft) | – |
| Screw, top triple clamp | M8 | 17 Nm (12.5 lbf ft) | – |
| Engine carrying screw | M10 | 45 Nm (33.2 lbf ft) | **Loctite® 243™** |
| Remaining nuts, chassis | M10 | 45 Nm (33.2 lbf ft) | – |
| Remaining screws, chassis | M10 | 45 Nm (33.2 lbf ft) | – |
| Screw, bottom shock absorber | M10 | 45 Nm (33.2 lbf ft) | **Loctite® 243™** |
| Screw, engine bearer on frame | M10 | 45 Nm (33.2 lbf ft) | – |
| Screw, handlebar support | M10 | 40 Nm (29.5 lbf ft) | **Loctite® 243™** |
| Screw, side stand | M10 | 35 Nm (25.8 lbf ft) | **Loctite® 243™** |
| Screw, top shock absorber | M10 | 45 Nm (33.2 lbf ft) | **Loctite® 243™** |
| Banjo bolt, brake line | M10x1 | 20 Nm (14.8 lbf ft) | – |
| Screw, front brake caliper | M10x1.25 | 45 Nm (33.2 lbf ft) | **Loctite® 243™** |
| Screw, swingarm pivot | M12 | 80 Nm (59 lbf ft) | – |
| Lambda sensor | M12x1.25 | 25 Nm (18.4 lbf ft) | Copper paste |
| Nut, linkage lever on swingarm | M14x1.5 | 100 Nm (73.8 lbf ft) | – |
| Nut, linkage lever to rocker arm | M14x1.5 | 100 Nm (73.8 lbf ft) | – |
| Screw, bottom steering head | M20x1.5 | 60 Nm (44.3 lbf ft) | **Loctite® 243™** |
| Screw, top steering head | M20x1.5 | 12 Nm (8.9 lbf ft) | – |
| Screw, front wheel spindle | M24x1.5 | 45 Nm (33.2 lbf ft) | – |
| Nut, rear wheel spindle | M25x1.5 | 90 Nm (66.4 lbf ft) | – |

## 24.1 Cleaning the motorcycle

**Note**

**Material damage** Damage and destruction of components by high-pressure cleaning equipment.

– When cleaning the vehicle with a pressure cleaner, do not point the water jet directly onto electrical components, connectors, cables, bearings, etc. Maintain a minimum distance of 60 cm between the nozzle of the pressure cleaner and the component. Excessive pressure can cause malfunctions or destroy these parts.

**Warning**

**Environmental hazard** Hazardous substances cause environmental damage.

– Oil, grease, filters, fuel, cleaners, brake fluid, etc., should be disposed of as stipulated in applicable regulations.

**Info**

If you clean the motorcycle regularly, its value and appearance will be maintained over a long period.
Avoid direct sunshine on the motorcycle during cleaning.

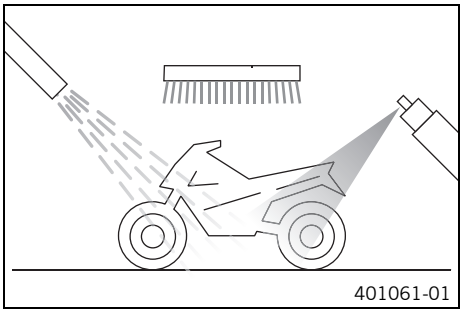


– Seal the exhaust system to keep water out.
– First remove coarse dirt particles with a gentle spray of water.
– Spray very dirty areas with a normal motorcycle cleaner and then clean with a brush.

Motorcycle cleaner (☛ p. 226)

**Info**

Use warm water containing normal motorcycle cleaner and a soft sponge. Never apply motorcycle cleaner to the dry vehicle; always rinse with water first.
If the vehicle was operated in road salt, clean it with cold water. Warm water enhances the corrosive effects of salt.

– After rinsing the motorcycle with a gentle spray of water, allow it to dry thoroughly.
– Remove the plug from the exhaust system.

**Warning**

**Danger of accidents** Reduced braking efficiency due to a wet or dirty brake system.

– Clean or dry a dirty or wet brake system by riding and braking gently.

– After cleaning, ride a short distance until the engine reaches operating temperature.

**Info**

The heat produced causes water at inaccessible locations in the engine and brake system to evaporate.

– Push back the protection covers of the handlebar controls to allow any water that has penetrated to evaporate.
– After the motorcycle has cooled off, lubricate all moving parts and bearings.
– Clean the chain. (☛ p. 80)
– Treat bare metal parts (except for brake discs and exhaust system) with anti-corrosion materials.

Preserving materials for paints, metal and rubber (☛ p. 227)

– Treat all painted parts with a mild paint polish.

Perfect Finish and high gloss polish for paints (☛ p. 226)

**Info**

Do not polish parts that were matte when delivered as this would strongly impair the material quality.

– Treat all plastic parts and powder-coated parts with a mild cleaning and care agent.

| |
|---|
| Special cleaner for glossy and matte paint finishes, metal and plastic surfaces (☛ p. 227) |

– Lubricate the ignition/steering lock.

| |
|---|
| Universal oil spray (☛ p. 227) |

## 24.2 Checks and maintenance steps for winter operation

**Info**
If you use the motorcycle in winter, you must expect salt on the roads. You should therefore take precautions against aggressive road salt.
If the vehicle was operated in road salt, clean it with cold water after riding. Warm water would enhance the corrosive effects of salt.

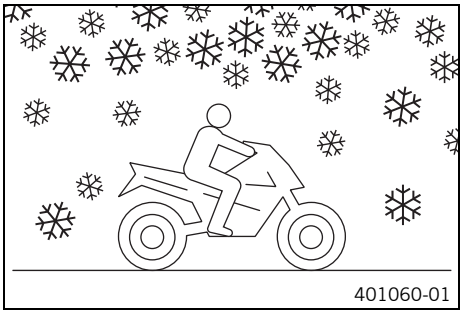
401060-01

– Clean the motorcycle. (☛ p. 198)
– Clean the brake system.

**Info**
After **EVERY** trip on salted roads, thoroughly wash the brake calipers and brake linings with cold water and dry carefully. This should be done after the parts are cooled down and while they are installed.
After use on salted roads, clean the motorcycle thoroughly with cold water and dry it properly.

– Treat the engine, the swingarm, and all other bare or galvanized parts (except brake discs) with a wax-based anti-corrosion substance.

**Info**
To prevent serious reduction of the braking efficiency, make sure no anti-corrosion substance gets on to the brake discs.

– Clean the chain. (☛ p. 80)

## 25.1 Storage

**Warning**

**Danger of poisoning** Fuel is poisonous and a health hazard.

– Fuel must not come into contact with the skin, eyes, or clothing. Do not breathe in the fuel vapors. If contact occurs with the eyes, rinse with water immediately and contact a physician. Immediately clean contaminated areas on the skin with soap and water. If fuel is swallowed, contact a physician immediately. Change clothing that is contaminated with fuel. Store fuel properly in a suitable canister and keep away from children.

**Info**

If you want to garage the motorcycle for a longer period, take the following actions.
Before storing the motorcycle, check all parts for function and wear. If service, repairs or replacements are necessary, you should do this during the storage period (less workshop overload). In this way, you can avoid long workshop waiting times at the start of the new season.

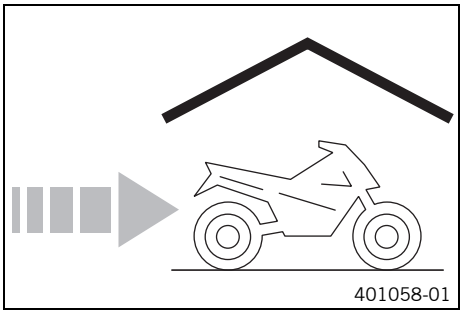


– When refueling for the last time before taking the motorcycle out of service, add fuel additive.

| |
|---|
| Fuel additive (☛ p. 226) |

– Refuel.
– Clean the motorcycle. (☛ p. 198)
– Change the engine oil and filter, clean the oil screens. (☛ p. 183)
– Check the antifreeze and coolant level. (☛ p. 179)
– Check the tire air pressure. (☛ p. 70)
– Remove the battery. (☛ p. 82)
– Recharge the battery. (☛ p. 83)

Guideline

| | |
|---|---|
| Storage temperature of battery without direct sunshine | 0… 35 °C (32… 95 °F) |

– Store the vehicle in a dry location that is not subject to large fluctuations in temperature.

**Info**

KTM recommends jacking up the motorcycle.

– Raise the motorcycle with the rear wheel stand. (☛ p. 10)
– Raise the motorcycle with the front wheel stand. (☛ p. 10)
– Cover the motorcycle with a tarp or cover that is permeable to air.

**Info**

Do not use non-porous materials since they prevent humidity from escaping, thus causing corrosion.
Avoid running the engine for a short time only. Since the engine cannot warm up properly, the water vapor produced during combustion condenses and causes valves and exhaust system to rust.

## 25.2 Preparing for use after storage

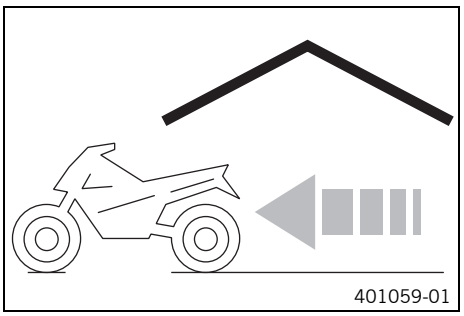


– Take the motorcycle off of the front wheel stand. (☛ p. 11)
– Take the motorcycle off of the rear wheel stand. (☛ p. 10)
– Recharge the battery. (☛ p. 83)
– Install the battery. (☛ p. 82)
– Set the clock. (☛ p. 99)
– Perform checks and vehicle care when preparing for use.
– Take a test ride.

## 26.1 Service schedule

| | Once after 1,000 km (621.4 mi) | Every 10,000 km (6,214 mi) or annually or after every sporting use | Every 20,000 km (12,428 mi) or every 2 years |
|---|---|---|---|
| Check that the electrical equipment is functioning correctly. | ○ | ● | ● |
| Read out the fault memory using the KTM diagnostics tool. | ○ | ● | ● |
| Check the measured service values with the KTM diagnostics tool. | | ● | ● |
| Change the engine oil and filter, clean the oil screens. (☛ p. 183) | ○ | ● | ● |
| Check the front brake linings. (☛ p. 89) | ○ | ● | ● |
| Check the rear brake linings. (☛ p. 93) | ○ | ● | ● |
| Check the brake discs. (☛ p. 71) | ○ | ● | ● |
| Check the brake lines for damage and leakage. | ○ | ● | ● |
| Check the rear brake fluid level. (☛ p. 95) | ○ | ● | ● |
| Check the free travel of the foot brake lever. (☛ p. 95) | ○ | ● | ● |
| Check that the shock absorber and fork are leak tight. If necessary and depending on use, service the fork and shock absorber. | ○ | ● | ● |
| Check the swingarm bearing. | | ● | ● |
| Check the wheel bearing for play. | | ● | ● |
| Check the tire condition. (☛ p. 70) | ○ | ● | ● |
| Check the tire air pressure. (☛ p. 70) | ○ | ● | ● |
| Check the spoke tension. (☛ p. 71) | ○ | ● | ● |
| Check for rim run-out. | ○ | ● | ● |
| Check the chain, rear sprocket, engine sprocket, and chain guide. (☛ p. 78) | | ● | ● |
| Check the chain tension. (☛ p. 77) | ○ | ● | ● |
| Grease all moving parts (e.g. side stand, hand lever, chain, ...) and check for smooth operation. | ○ | ● | ● |
| Clean the dust boots of the fork legs. (☛ p. 15) | | ● | ● |
| Check the brake fluid level of the front brake. (☛ p. 90) | ○ | ● | ● |
| Bleed the fork legs. (☛ p. 15) | | ● | ● |
| Check the steering head bearing play. (☛ p. 26) | ○ | ● | ● |
| Change the spark plug. | | | ● |
| Check the valve clearance. | | ● | ● |
| Check all hoses (e.g. fuel, cooling, bleeder, drainage, etc.) and sleeves for cracking, leaks, and incorrect routing. | | | ● |
| Check the antifreeze and coolant level. (☛ p. 179) | ○ | ● | ● |
| Check the cables for damage and routing without sharp bends. | | ● | ● |
| Check that the throttle cables are undamaged, routed without sharp bends and set correctly. | ○ | ● | ● |
| Change the air filter. Clean the air filter box. | | ● | ● |
| Check the fuel pressure. | | ● | ● |
| Check the CO adjustment with the KTM diagnostics tool. | | ● | ● |
| Check/rectify the fluid level of the hydraulic clutch. (☛ p. 174) | | ● | ● |
| Check the screws and nuts for tightness. | ○ | ● | ● |
| Change the rear brake fluid. (☛ p. 97) | | | ● |
| Change the rear brake fluid. (☛ p. 97) | | | ● |
| Check the clutch. | | | ● |
| Check the headlight setting. (☛ p. 101) | ○ | ● | ● |
| Check that the radiator fan is functioning properly. | ○ | ● | ● |
| Final check: Check the vehicle for roadworthiness and take a test ride. | ○ | ● | ● |
| Read out the fault memory using the KTM diagnostics tool after a test ride. | ○ | ● | ● |
| Make the service entry in **KTM DEALER.NET** and in the service record. | ○ | ● | ● |

○ One-time interval

● Periodic interval

## 27.1 Page 01 of 11

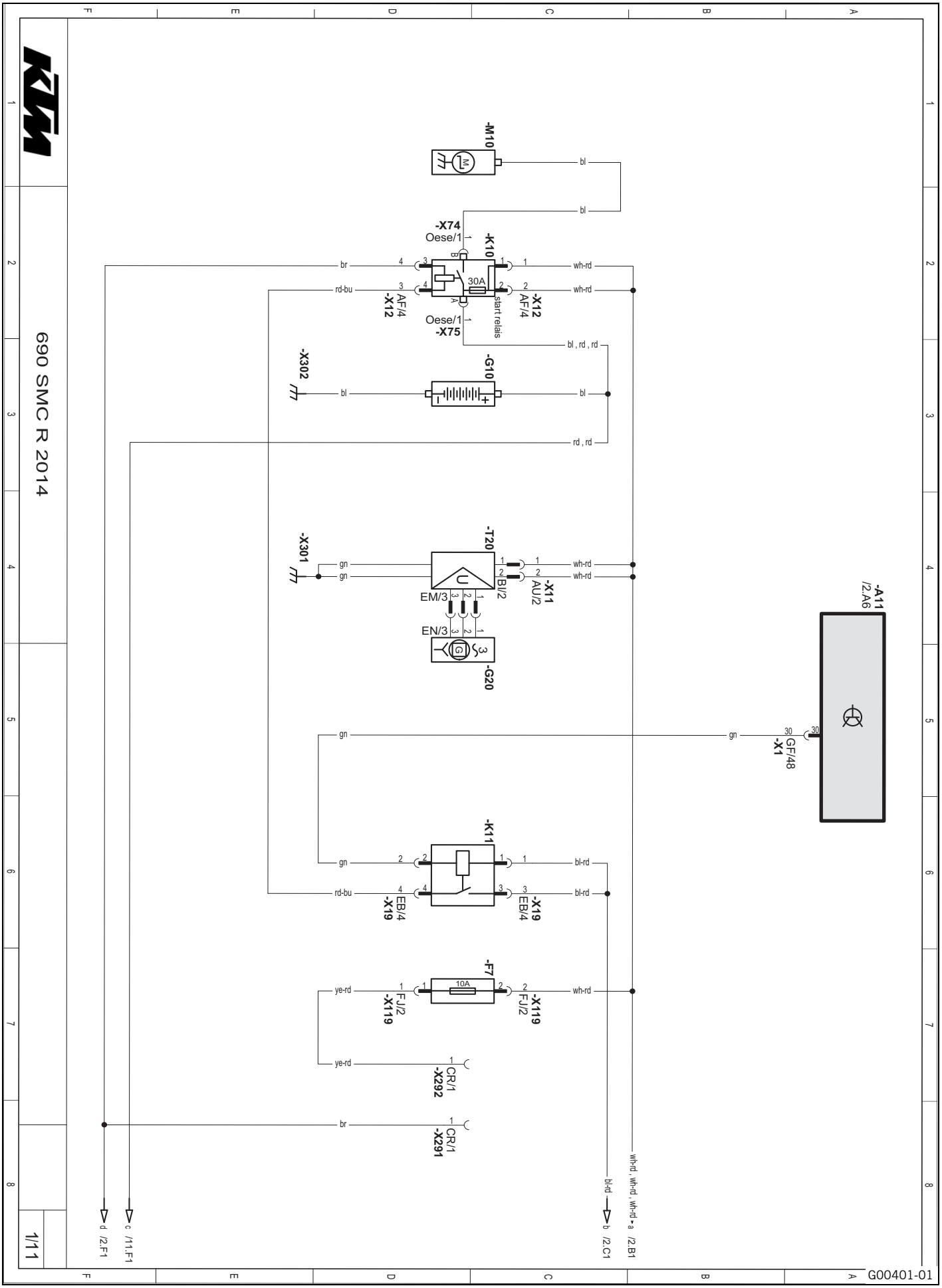

**Components:**

| | |
|---|---|
| A11 | EFI control unit |
| F7 | Fuse |
| G10 | Battery |
| G20 | Alternator |
| K10 | Starter relay with main fuse |
| K11 | Start auxiliary relay |
| M10 | Starter motor |
| T20 | Voltage regulator |
| X291 | Connector for accessory ground (terminal 31) **ACC 1** (not assigned) |
| X292 | Connector for accessory plus (terminal 30) **ACC 1** (not assigned) |

## 27.2 Page 02 of 11

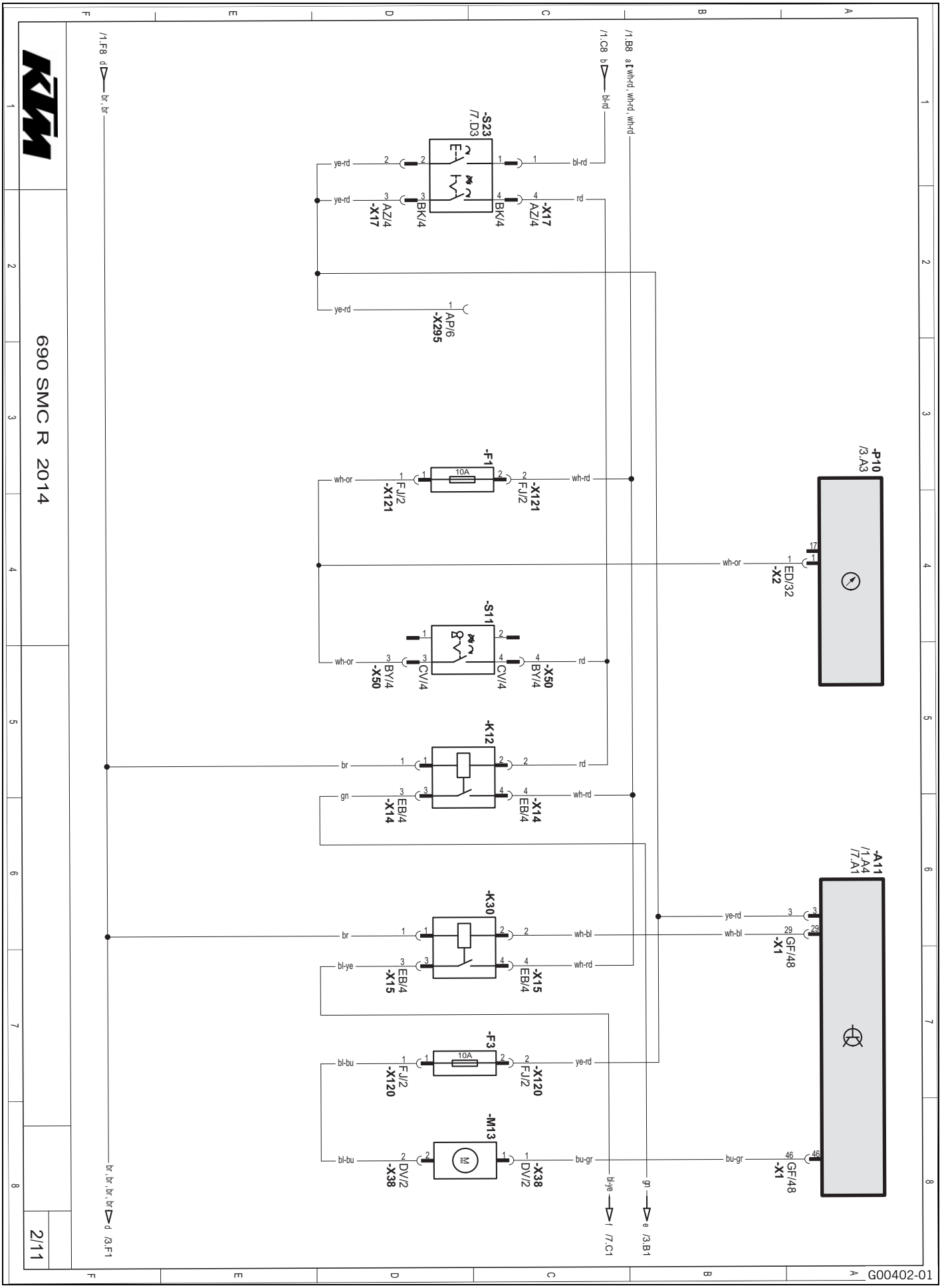

**Components:**

| | |
|---|---|
| A11 | EFI control unit |
| F1 | Fuse |
| F3 | Fuse |
| K12 | Light relay |
| K30 | Power relay |
| M13 | Fuel pump |
| P10 | Combination instrument |
| S11 | Ignition/steering lock |
| S23 | Emergency OFF switch, electric starter button |
| X295 | Diagnostics connector |

## 27.3 Page 03 of 11

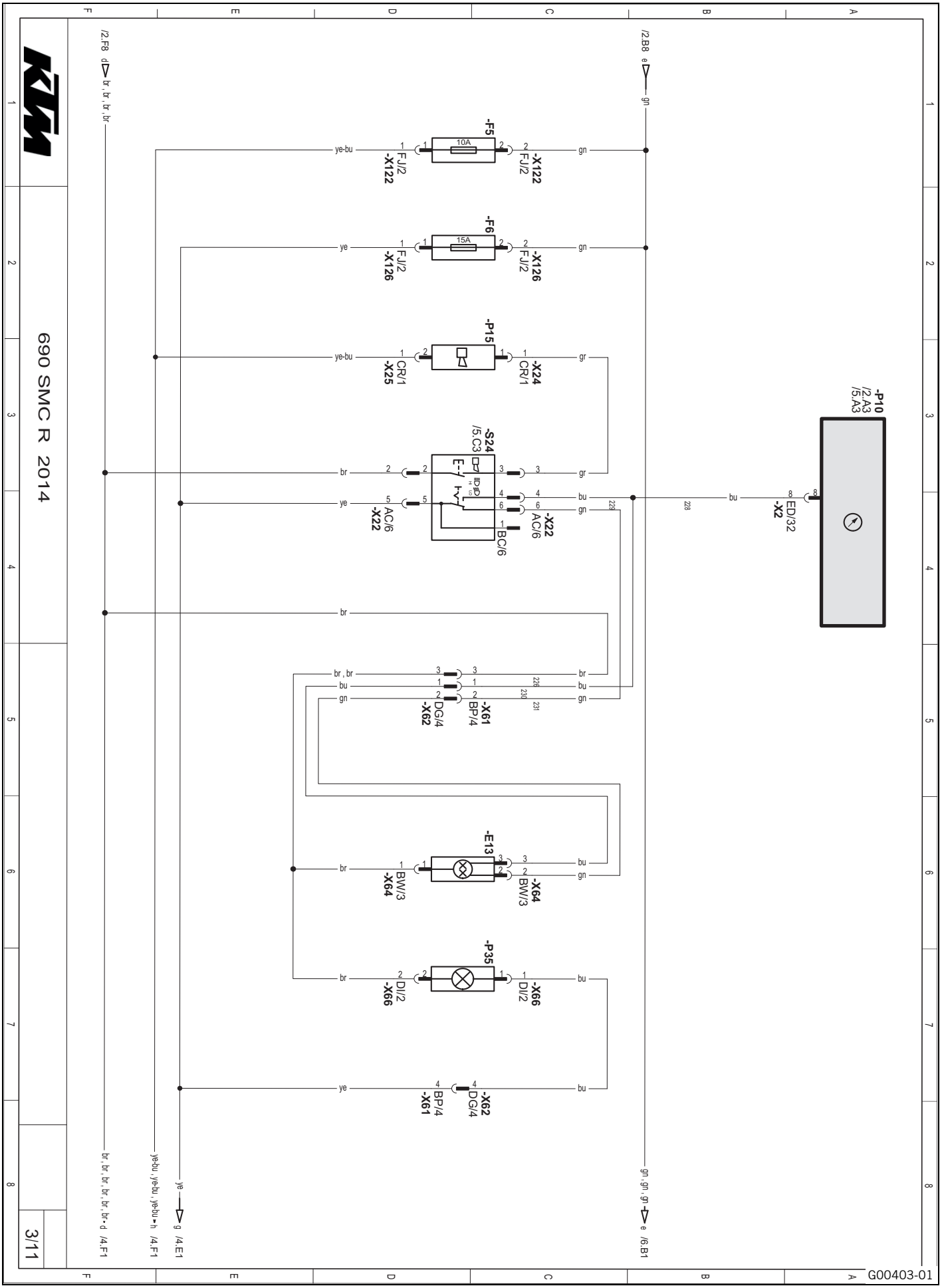

**Components:**

| | |
|---|---|
| E13 | Low beam, high beam |
| F5 | Fuse |
| F6 | Fuse |
| P10 | Combination instrument |
| P15 | Horn |
| P35 | Parking light |
| S24 | Light switch, horn button, headlight flasher switch, turn signal switch |

## 27.4 Page 04 of 11

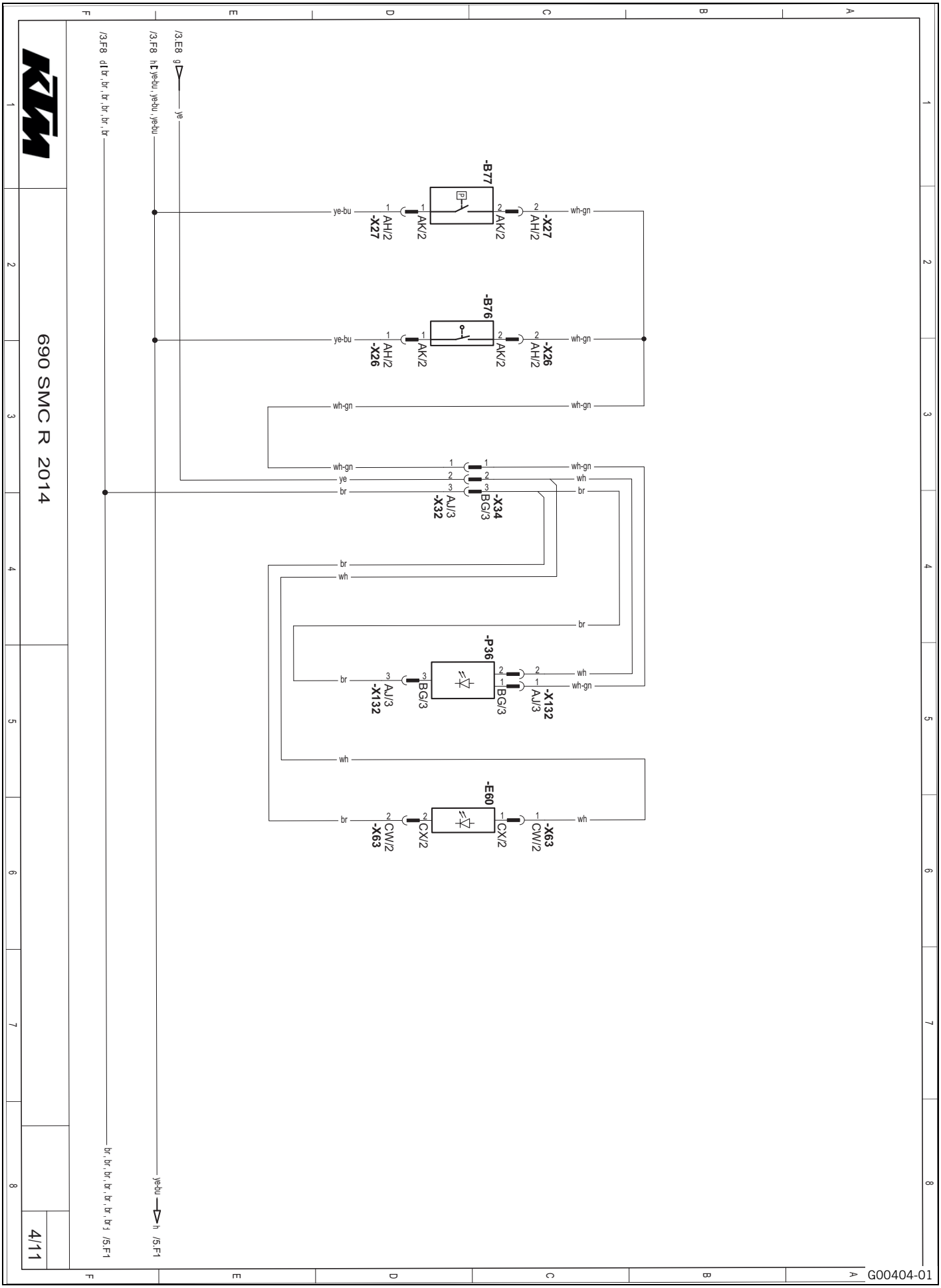

**Components:**

| | |
|---|---|
| B76 | Front brake light switch |
| B77 | Rear brake light switch |
| E60 | License plate lamp |
| P36 | Brake/tail light |

## 27.5 Page 05 of 11

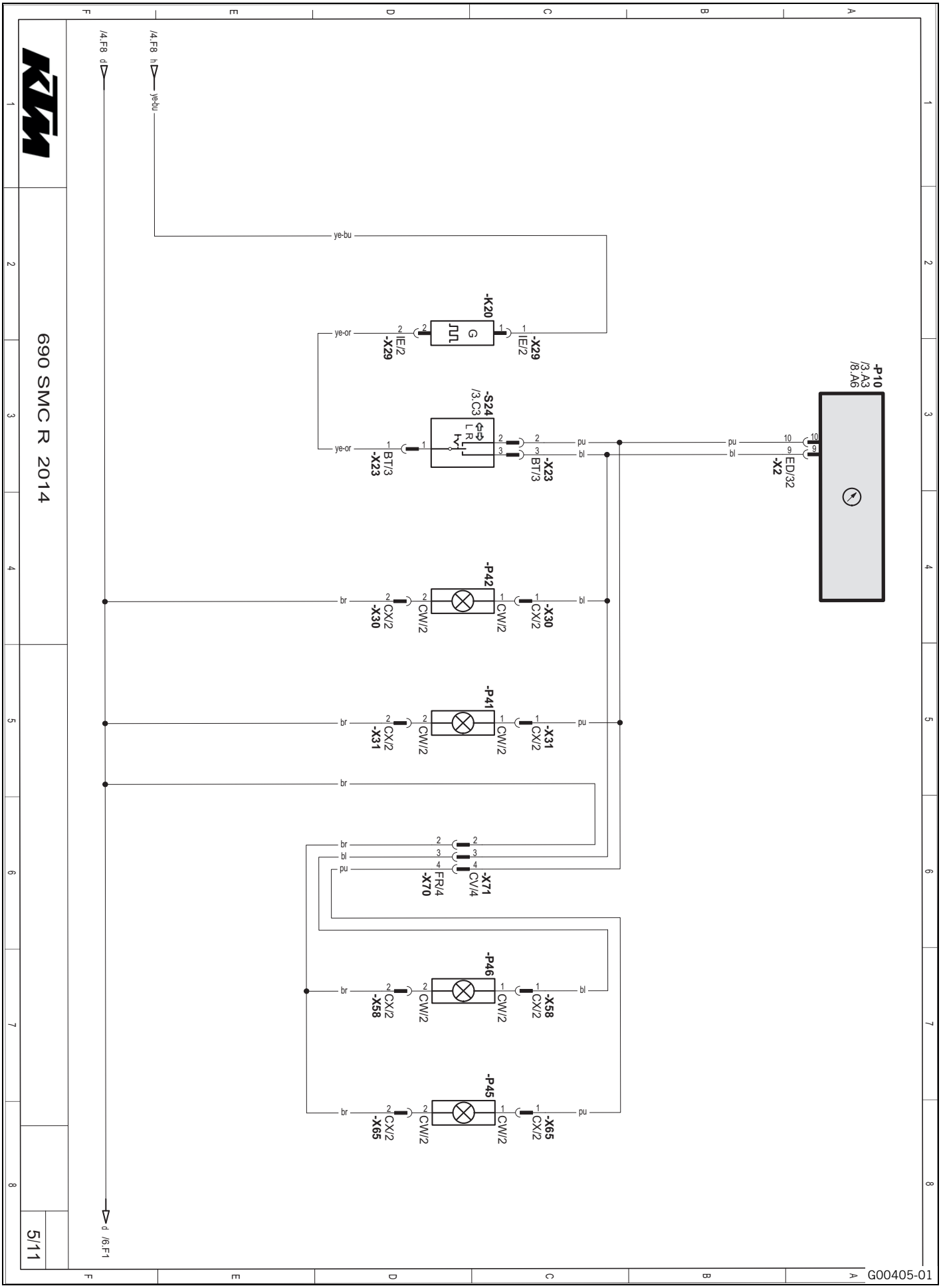

**Components:**

| | |
|---|---|
| K20 | Turn signal relay |
| P10 | Combination instrument |
| P41 | Turn signal, front left |
| P42 | Turn signal, front right |
| P45 | Turn signal, rear left |
| P46 | Turn signal, rear right |
| S24 | Light switch, horn button, headlight flasher switch, turn signal switch |

## 27.6 Page 06 of 11

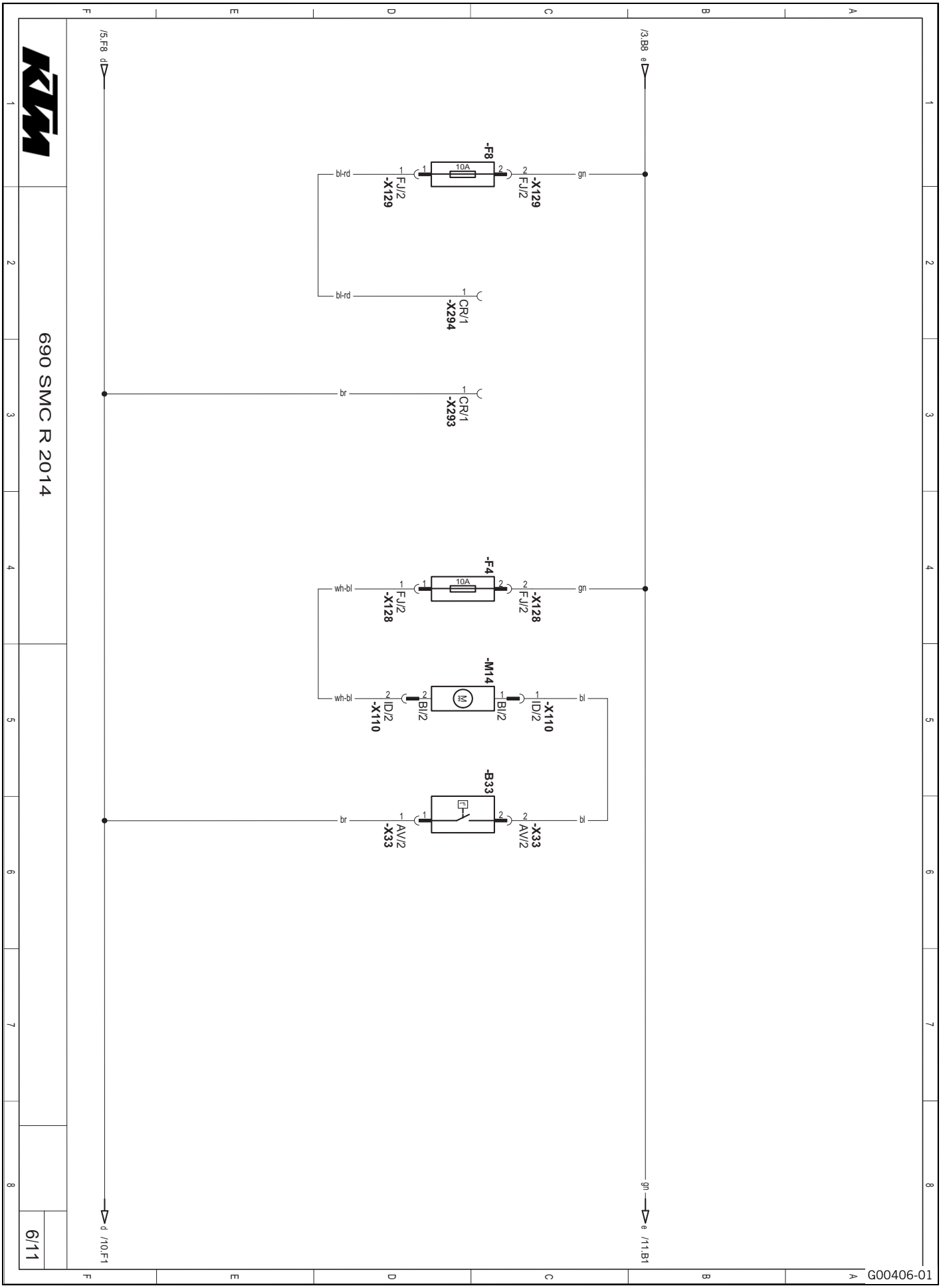

**Components:**

| | |
|---|---|
| B33 | Radiator fan temperature switch |
| F4 | Fuse |
| F8 | Fuse |
| M14 | Radiator fan |
| X293 | Connector for accessory ground (terminal 31) **ACC 2** (not assigned) |
| X294 | Connector for accessory plus (terminal 15) **ACC 2** (not assigned) |

## 27.7 Page 07 of 11

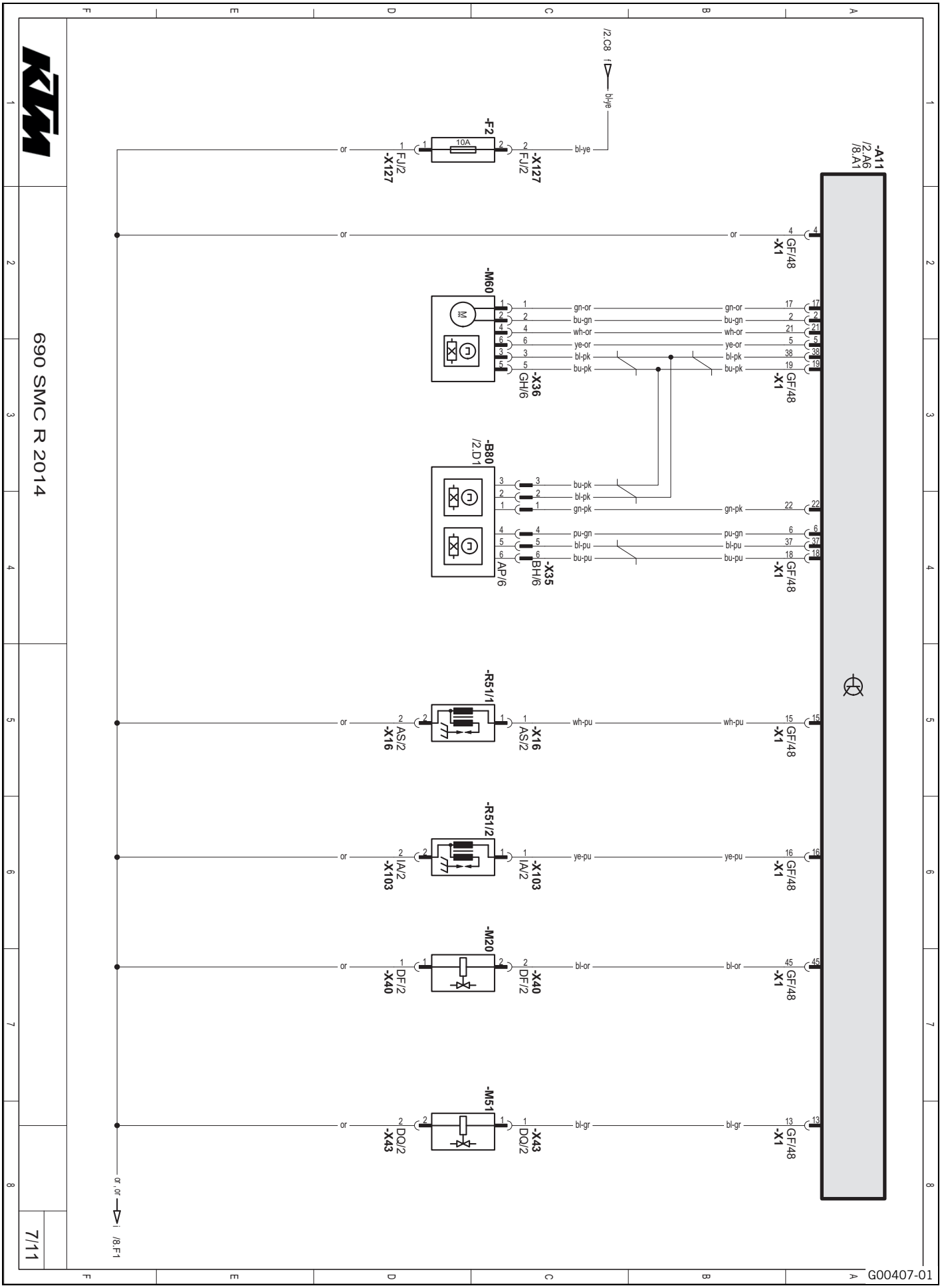

**Components:**

| | |
|---|---|
| A11 | EFI control unit |
| B80 | Accelerator position sensor |
| F2 | Fuse |
| M20 | Fuel evaporation valve |
| M51 | Injector cylinder 1 |
| M60 | Motor drive |
| R51/1 | Ignition coil 1, (cylinder 1) |
| R51/2 | Ignition coil 2, (cylinder 1) |

## 27.8 Page 08 of 11

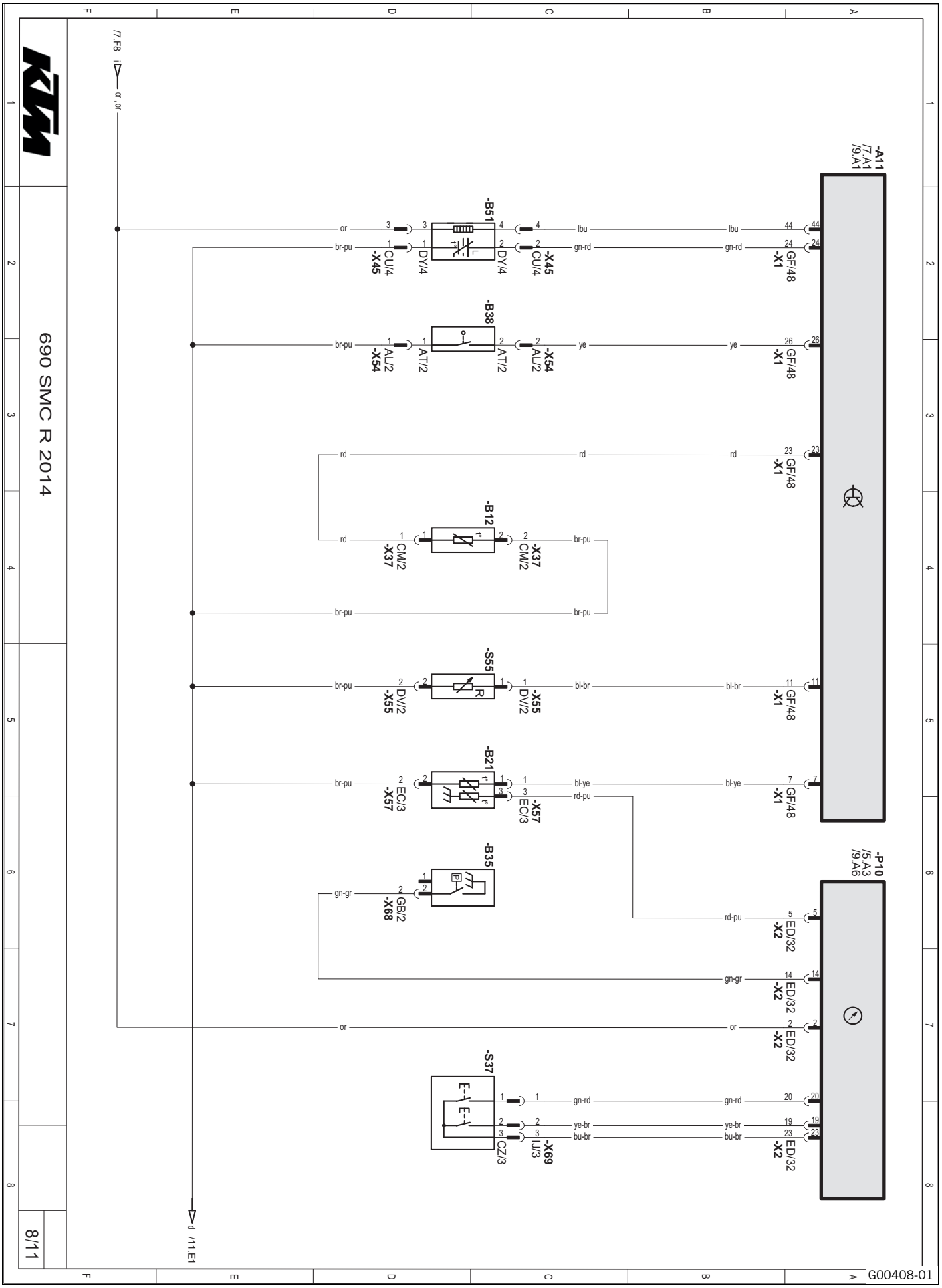

**Components:**

| | |
|---|---|
| A11 | EFI control unit |
| B12 | Intake air temperature sensor |
| B21 | Engine coolant temperature sensor cylinder 1 |
| B35 | Oil pressure sensor |
| B38 | Clutch switch |
| B51 | Lambda sensor (cylinder 1) |
| P10 | Combination instrument |
| S37 | Switch |
| S55 | **Map-Select** Switch |

## 27.9 Page 09 of 11

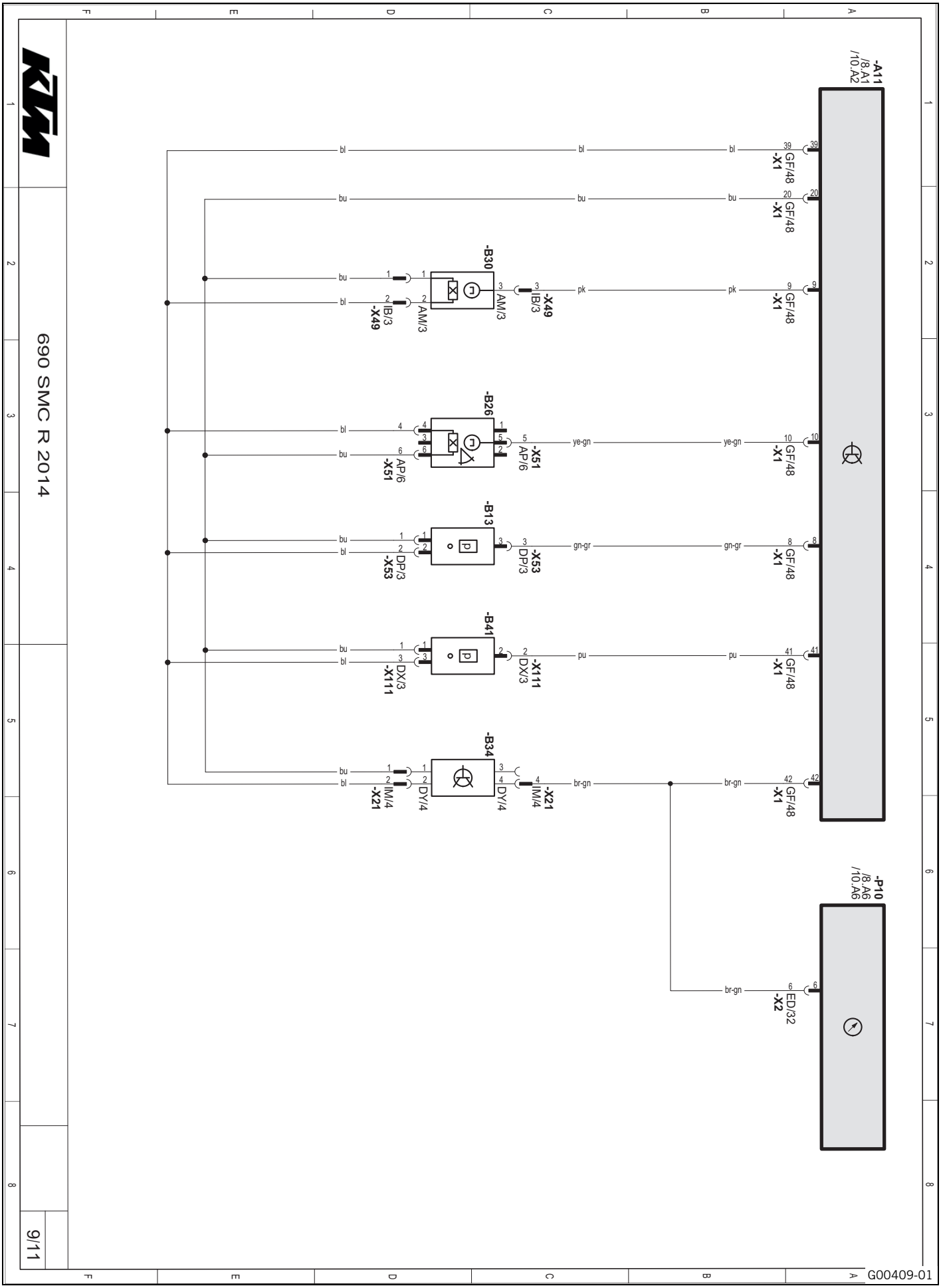

**Components:**

| | |
|---|---|
| A11 | EFI control unit |
| B13 | Ambient air pressure sensor |
| B26 | Rollover sensor |
| B30 | Side stand switch |
| B31 | Accelerator position sensor |
| B41 | Manifold absolute pressure sensor cylinder 1 |
| P10 | Combination instrument |

## 27.10 Page 10 of 11

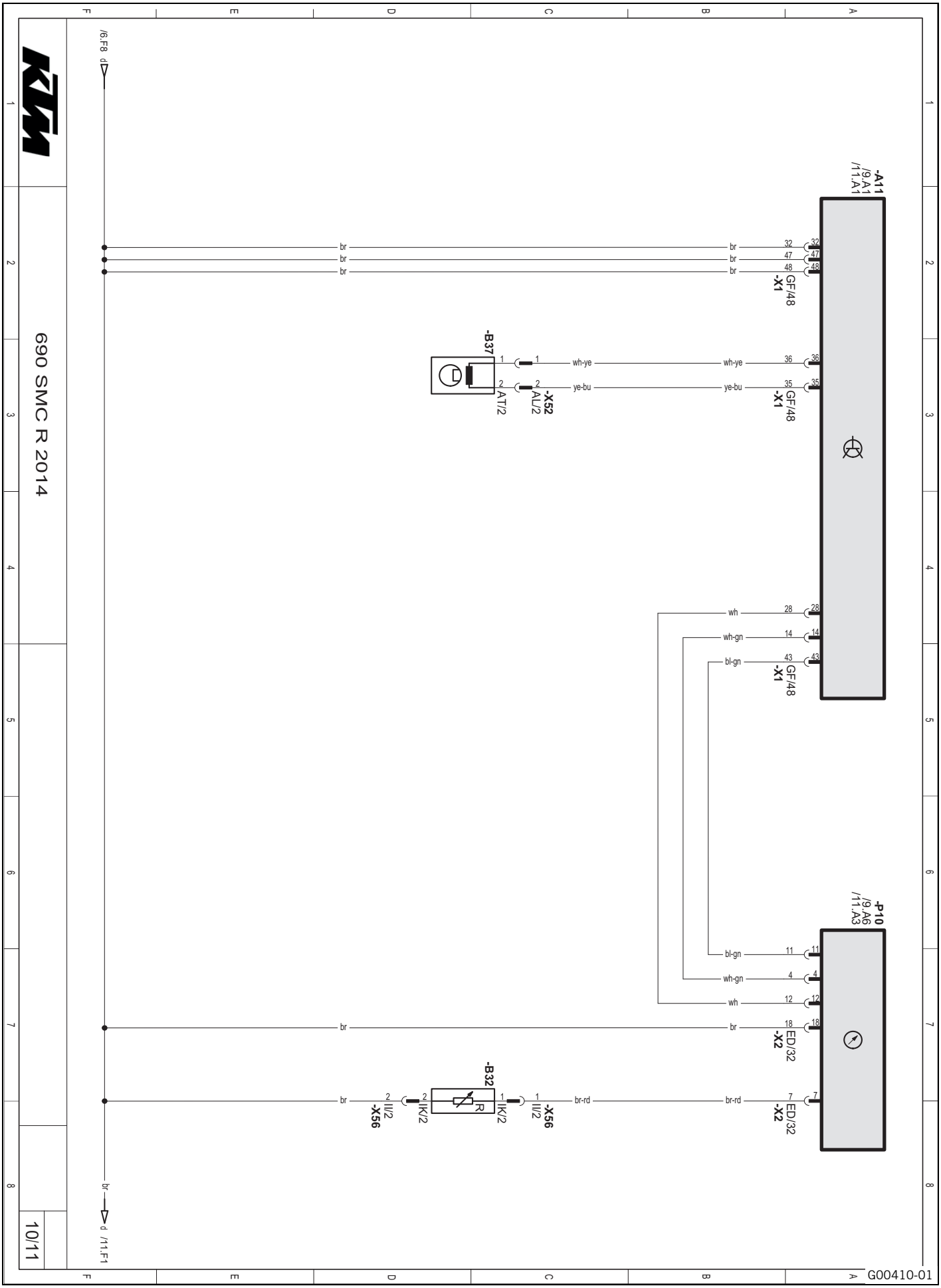

**Components:**

| | |
|---|---|
| A11 | EFI control unit |
| B32 | Fuel level indicator |
| B37 | Crankshaft position sensor |
| P10 | Combination instrument |

## 27.11 Page 11 of 11

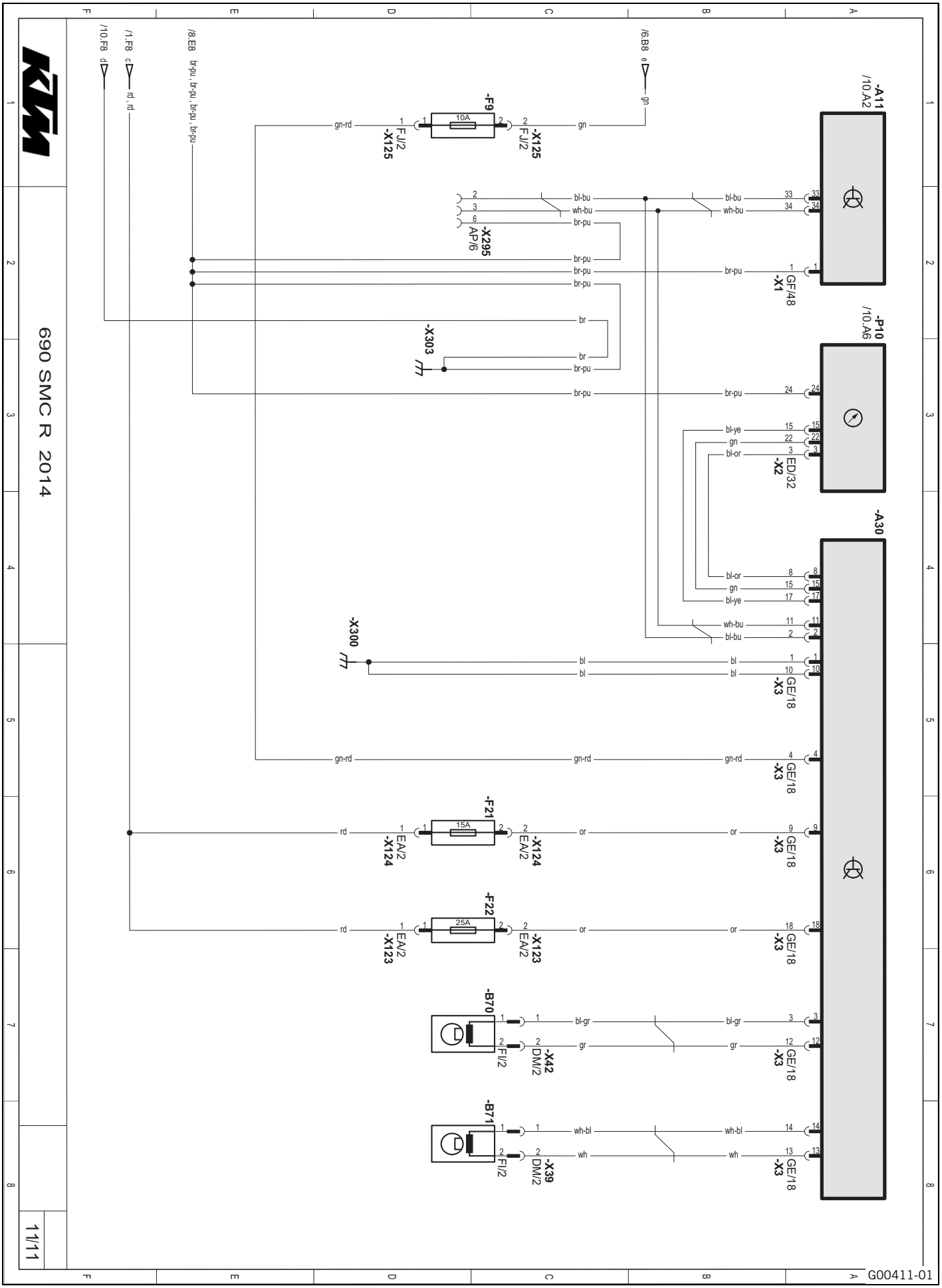

**Components:**

| | |
|---|---|
| A11 | EFI control unit |
| A30 | ABS control unit |
| B70 | Front wheel speed sensor |
| B71 | Wheel speed sensor, rear |
| F9 | Fuse |
| F21 | ABS fuse |
| F22 | ABS fuse |
| P10 | Combination instrument |
| X295 | Diagnostics connector |

**Cable colors:**

| | |
|---|---|
| bl | Black |
| br | Brown |
| bu | Blue |
| gn | Green |
| gr | Gray |
| lbu | light blue |
| or | Orange |
| pk | pink |
| pu | Violet |
| rd | Red |
| wh | White |
| ye | Yellow |

## Brake fluid DOT 4 / DOT 5.1

**Standard/classification**
- DOT

**Guideline**
- Use only brake fluid that complies with the specified standard (see specifications on the container) and that possesses the corresponding properties.

**Recommended supplier**
**Castrol**
- **RESPONSE BRAKE FLUID SUPER DOT 4**

**Motorex®**
- **Brake Fluid DOT 5.1**

## Coolant

**Guideline**
- Use only suitable coolant (even in countries with high temperatures). Using inferior antifreeze can result in corrosion and foaming.
- Use only coolant based on ethylene glycol.

**Mixture ratio**

| | |
|---|---|
| Antifreeze protection: −25… −45 °C (−13… −49 °F) | 50 % corrosion inhibitor/antifreeze<br>50 % distilled water |

## Coolant (mixed ready to use)

| | |
|---|---|
| Antifreeze | −40 °C (−40 °F) |

**Recommended supplier**
**Motorex®**
- **COOLANT M5.0**

## Engine oil (SAE 10W/60) (00062010035)

**Standard/classification**
- JASO T903 MA (☛ p. 241)
- SAE (☛ p. 241) (SAE 10W/60)
- KTM LC4 2007+

**Guideline**
- Use only engine oils that comply with the specified standards (see specifications on the container) and that possess the corresponding properties.

| |
|---|
| Synthetic engine oil |

**Recommended supplier**
**Motorex®**
- **Cross Power 4T**

## Engine oil (SAE 10W/50)

**Standard/classification**
- JASO T903 MA (☛ p. 241)
- SAE (☛ p. 241) (SAE 10W/50)

**Guideline**
- Use only engine oils that comply with the specified standards (see specifications on the container) and that possess the corresponding properties.

| |
|---|
| Fully synthetic engine oil |

**Recommended supplier**
**Motorex®**
- **Power Synt 4T**

## Fork oil (SAE 4) (48601166S1)

**Standard/classification**
– SAE (☛ p. 241) (SAE 4)

**Guideline**
– Use only oils that comply with the specified standards (see specifications on the container) and that possess the corresponding properties.

## Hydraulic fluid (15)

**Standard/classification**
– ISO VG (15)

**Guideline**
– Use only hydraulic oil that complies with the specified standard (see specifications on the container) and that possesses the corresponding properties.

**Recommended supplier**
**Motorex®**
– **Hydraulic Fluid 75**

## Shock absorber fluid (SAE 2.5) (50180751S1)

**Standard/classification**
– SAE (☛ p. 241) (SAE 2.5)

**Guideline**
– Use only oils that comply with the specified standards (see specifications on the container) and that possess the corresponding properties.

## Super unleaded (ROZ 95/RON 95/PON 91)

**Standard/classification**
– DIN EN 228 (ROZ 95/RON 95/PON 91)

**Guideline**
– Only use unleaded super fuel that matches or is equivalent to the specified fuel grade.
– Fuel with an ethanol content of up to 10 % (E10 fuel) is safe to use.

**Info**
Do **not** use fuel containing methanol (e. g. M15, M85, M100) or more than 10 % ethanol (e. g. E15, E25, E85, E100).

## Chain cleaner

**Recommended supplier**
**Motorex®**
– **Chain Clean**

## Chain lube for road use

**Guideline**

**Recommended supplier**
**Motorex®**
– **Chainlube Road**

## Fuel additive

**Recommended supplier**
**Motorex®**
– **Fuel Stabilizer**

## Long-life grease

**Recommended supplier**
**Motorex®**
– **Bike Grease 2000**

## Lubricant (T511)

**Recommended supplier**
**Lubcon®**
– **Turmsilon® GTI 300 P**

## Lubricant (T159)

**Recommended supplier**
**Bel-Ray®**
– **MC-11®**

## Lubricant (T158)

**Recommended supplier**
**Lubcon®**
– **Turmogrease® PP 300**

## Lubricant (T625)

**Recommended supplier**
**Molykote®**
– **33 Medium**

## Motorcycle cleaner

**Recommended supplier**
**Motorex®**
– **Moto Clean**

## Perfect Finish and high gloss polish for paints

**Recommended supplier**
**Motorex®**
– **Moto Polish & Shine**

## Preserving materials for paints, metal and rubber

**Recommended supplier**
**Motorex®**
– **Moto Protect**

## Special cleaner for glossy and matte paint finishes, metal and plastic surfaces

**Recommended supplier**
**Motorex®**
– **Quick Cleaner**

## Universal oil spray

**Recommended supplier**
**Motorex®**
– **Joker 440 Synthetic**

## Bleeder cover

201830-10

Art. no.: 00029013004

## Bleeder cover

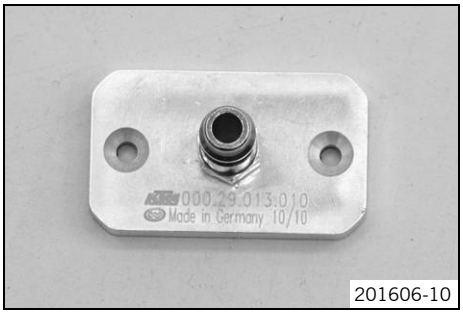

201606-10

Art. no.: 00029013010

## Bleeding device

201491-10

Art. no.: 00029013100

## Bearing puller

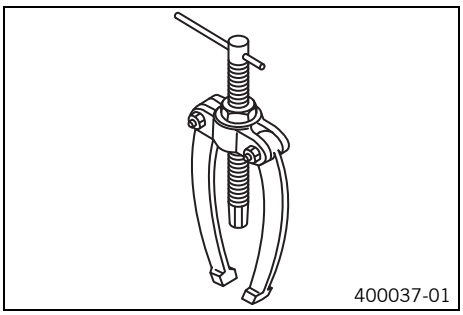
400037-01

Art. no.: 15112017000

## Insert for bearing puller

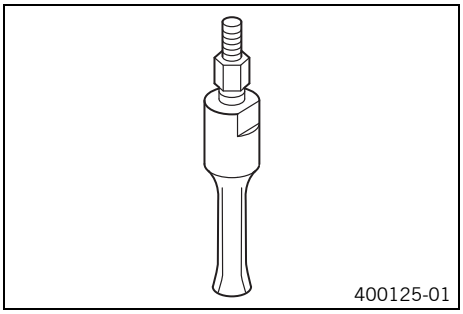
400125-01

Art. no.: 15112018100

**Feature**

| |
|---|
| 18... 23 mm (0.71... 0.91 in) |

## Bleed syringe

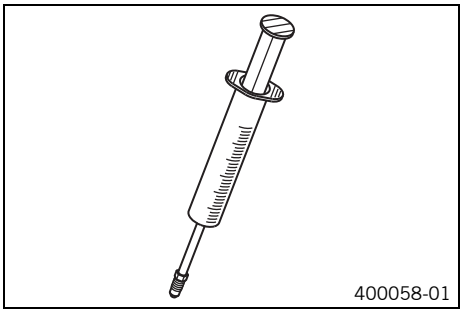


Art. no.: 50329050000

## Circlip pliers reverse

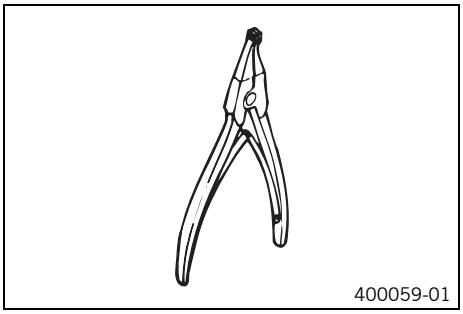


Art. no.: 51012011000

## Extractor

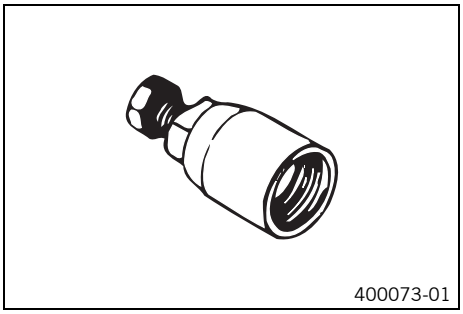


Art. no.: 58429009000

## Tool for inner bearing race

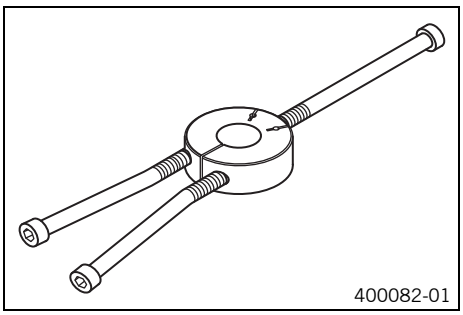


Art. no.: 58429037043

## Mounting sleeve

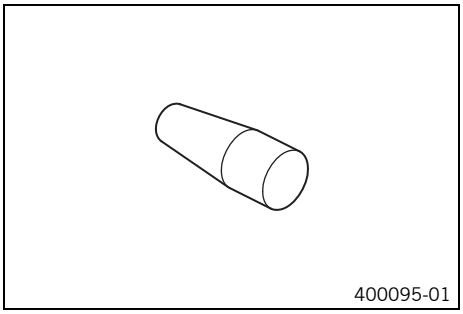


Art. no.: 58529005000

## Valve spring compressor

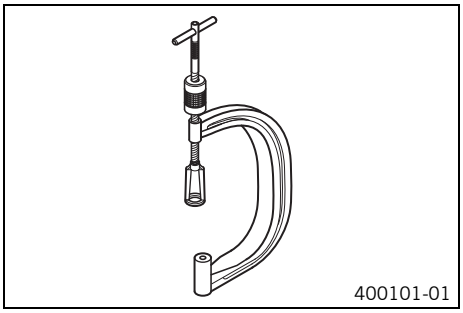


Art. no.: 59029019000

## Limit plug gauge

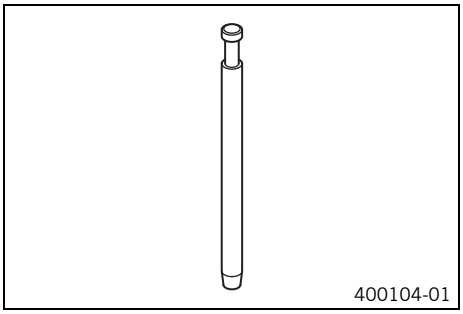


Art. no.: 59029026006

## Extractor

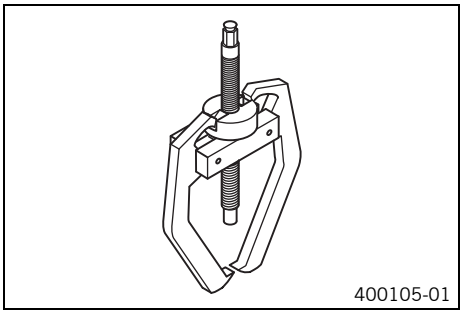


Art. no.: 59029033000

## Feeler gauge

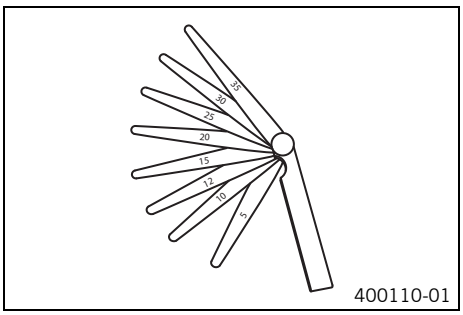


Art. no.: 59029041100

## Hose clamp pliers

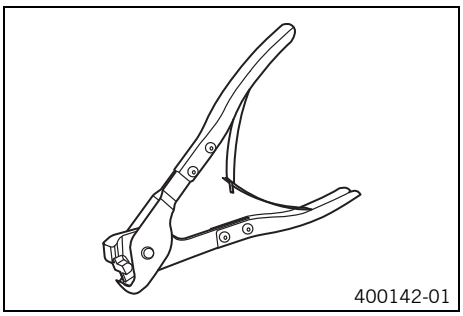


Art. no.: 60029057000

## Pliers for spring band clamp

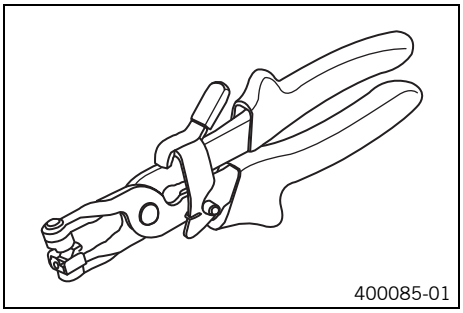


Art. no.: 60029057100

## Adapter

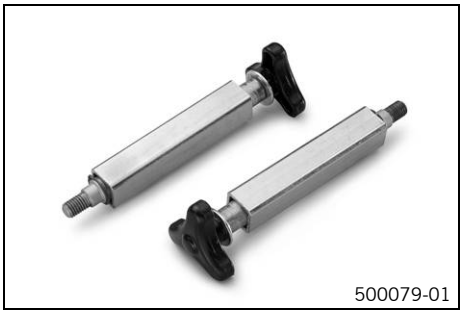


Art. no.: 61029055110

## Front wheel stand

Art. no.: 61029055300

## Rear wheel stand

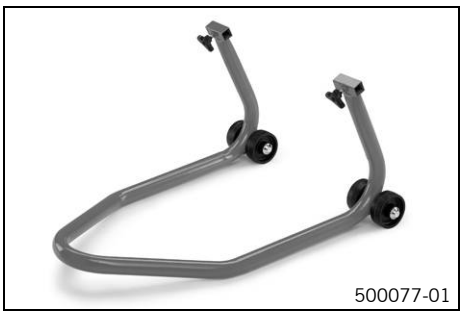


Art. no.: 61029055400

## Testing hose

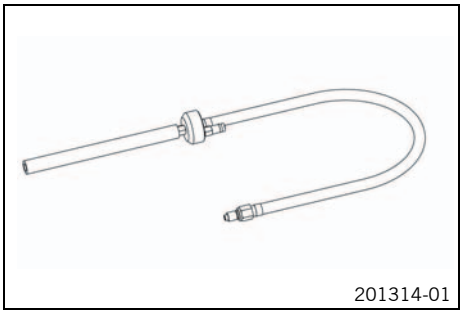


Art. no.: 61029093000

## Pressure testing tool

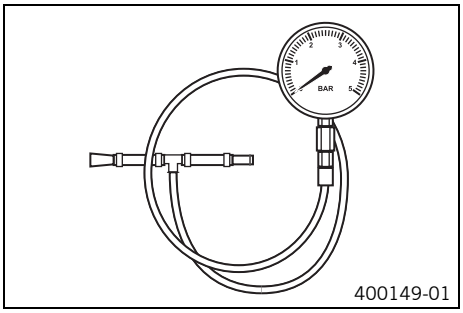


Art. no.: 61029094000

## Engine assembly stand

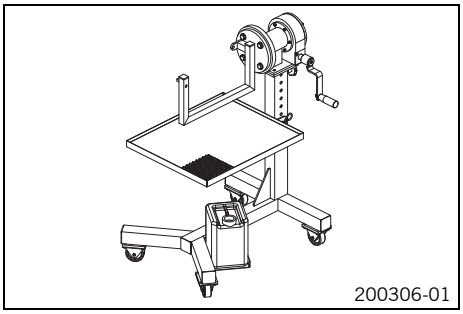


Art. no.: 61229001000

## Work stand

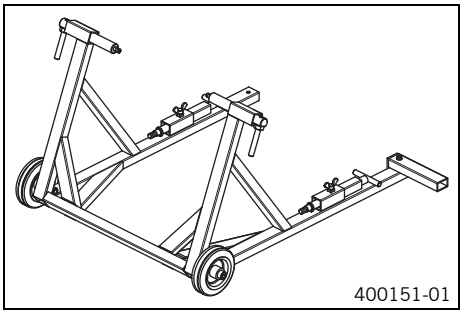


Art. no.: 62529055000

## Support for engine assembly stand

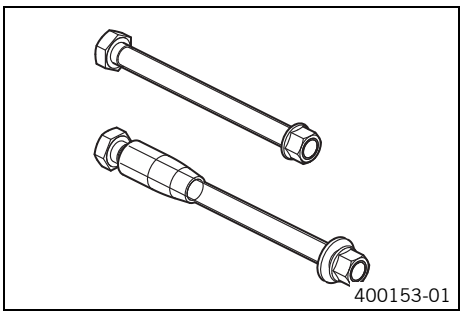


Art. no.: 75012001060

## Holder for engine assembly stand

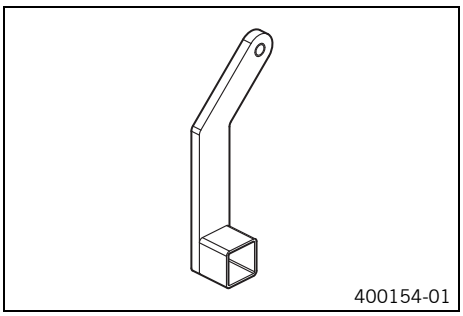


Art. no.: 75012001070

## Mounting tool for lock ring

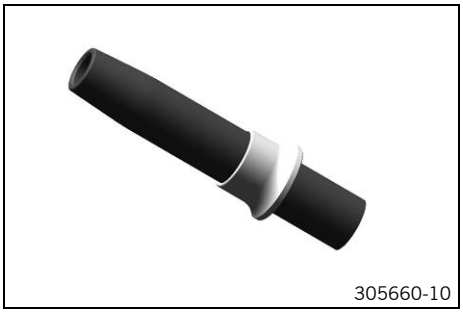


Art. no.: 75029005000

## Piston assembly ring

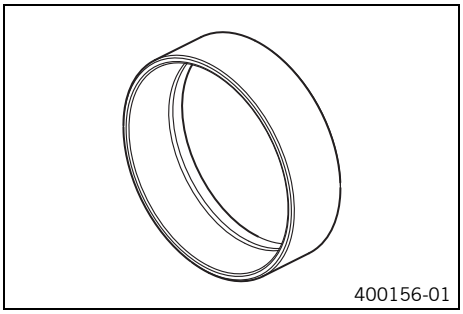


Art. no.: 75029015102

## Extractor

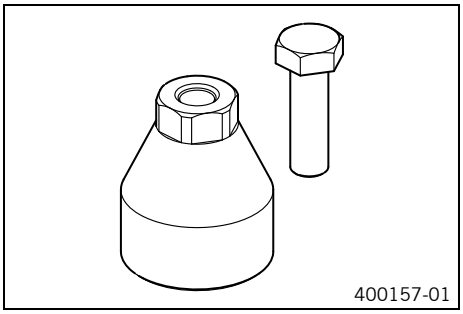


Art. no.: 75029021000

## Assembly screws

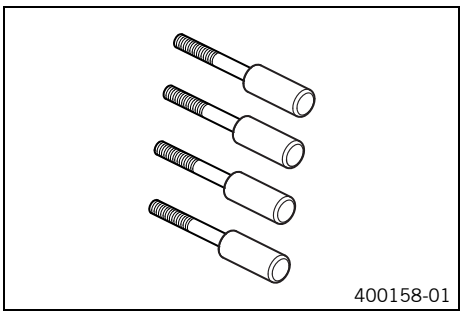


Art. no.: 75029033000

## Insertion for piston ring lock

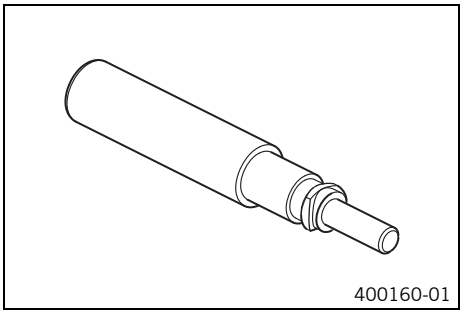


Art. no.: 75029035000

## Work stand adapter

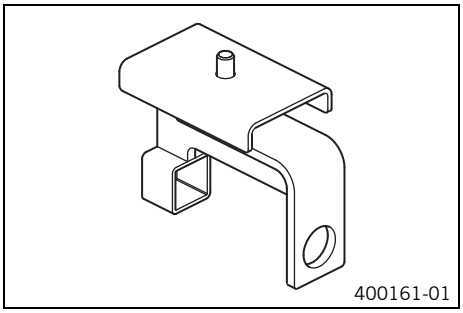


Art. no.: 75029036000

## Push-in drift

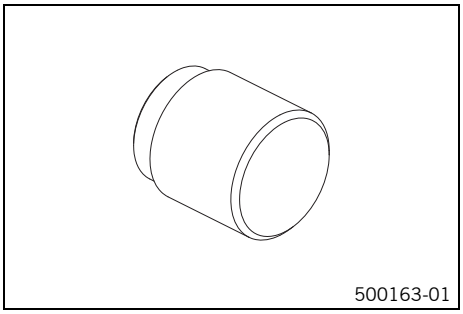


Art. no.: 75029044010

## Push-in drift

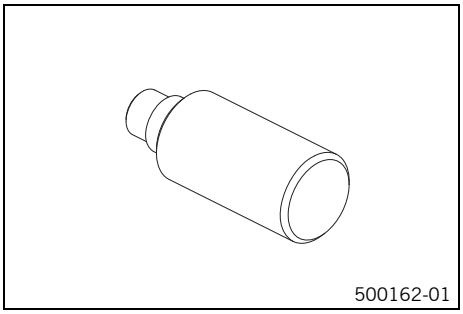


Art. no.: 75029044020

## Pressing device for crankshaft, complete

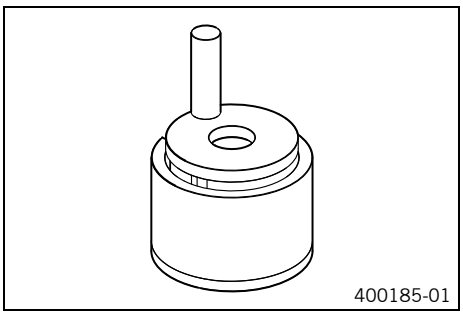


Art. no.: 75029047000

## Upper part, pressing-out tool

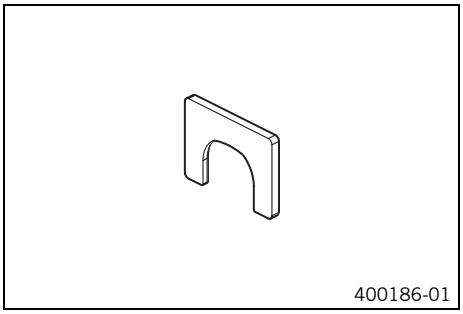


Art. no.: 75029047050

## Under part, pressing-out tool

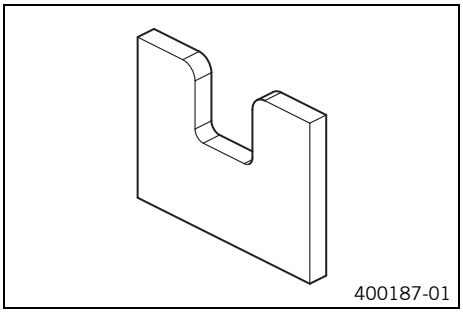
400187-01

Art. no.: 75029047051

## Extractor

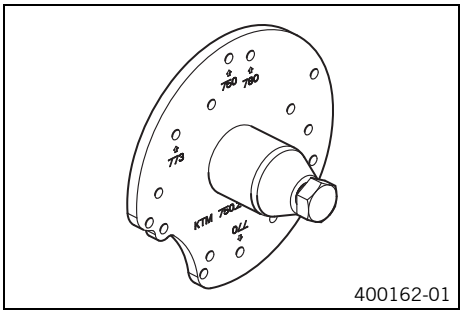

400162-01

Art. no.: 75029048000

## Clamping plate

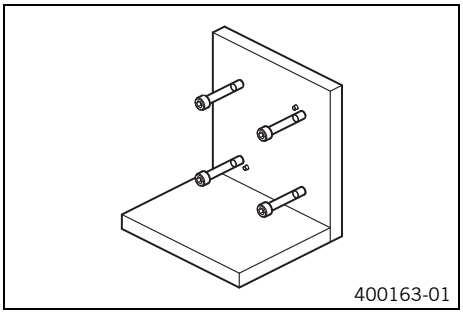
400163-01

Art. no.: 75029050000

## Push-out drift

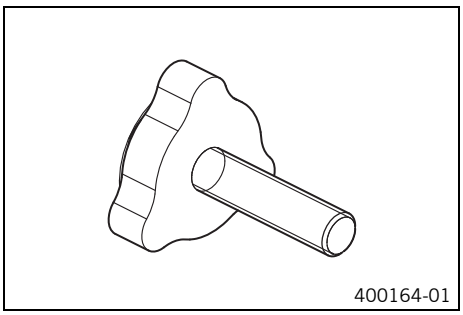
400164-01

Art. no.: 75029051000

## Floor jack attachment

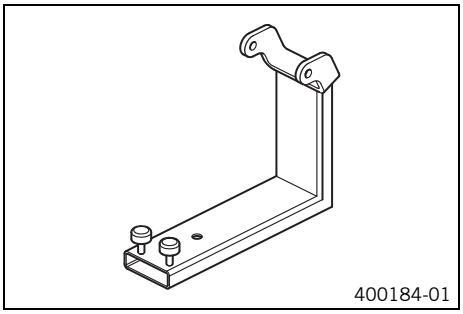
400184-01

Art. no.: 75029055000

## Mounting sleeve

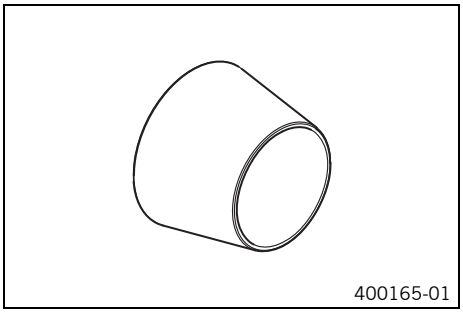


Art. no.: 75029080000

## Gear segment

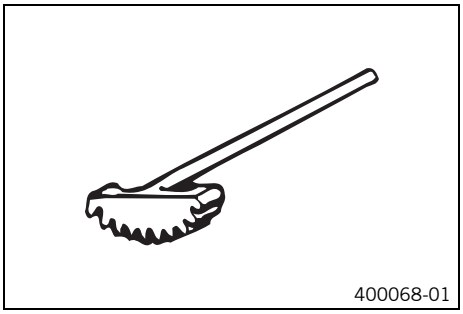


Art. no.: 75029081000

## Protection cover

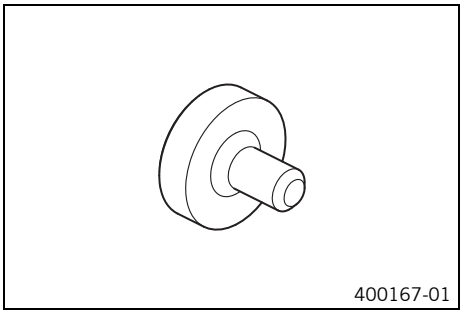


Art. no.: 75029090000

## Holding spanner

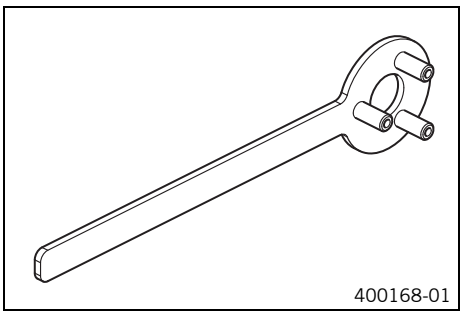


Art. no.: 75029091000

## Spark plug wrench

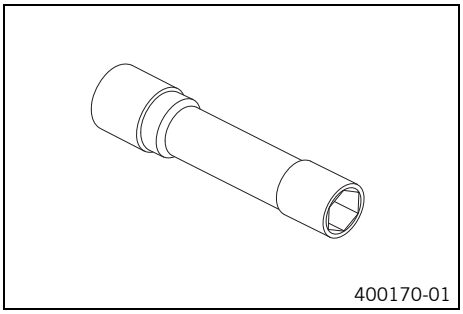


Art. no.: 75029172000

## Oil pressure adapter

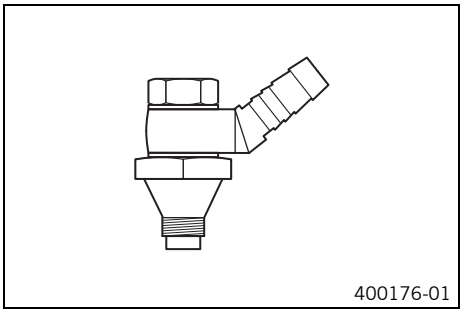


Art. no.: 77329006000

## Engine blocking screw

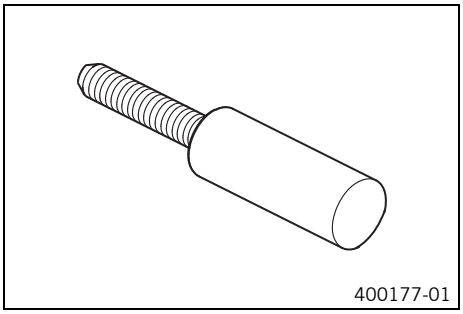


Art. no.: 77329010000

## Release device for timing chain tensioner

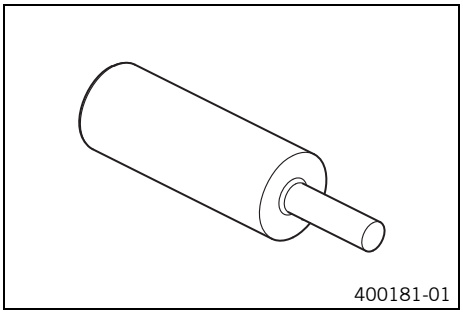


Art. no.: 77329051000

## Valve spring mounting device

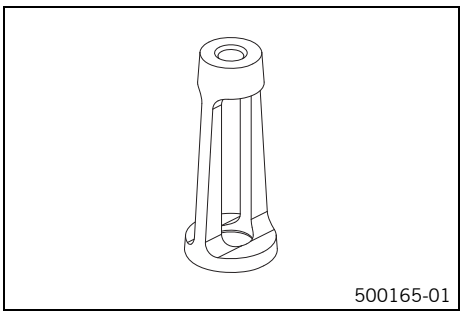


Art. no.: 78029060000

## Pin wrench

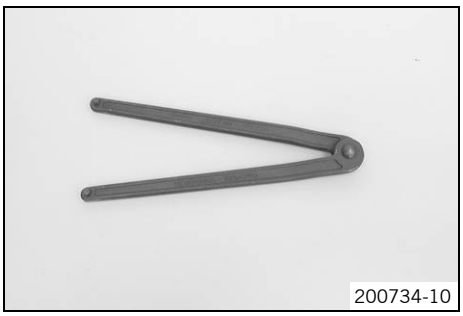


Art. no.: T103

## Hook wrench

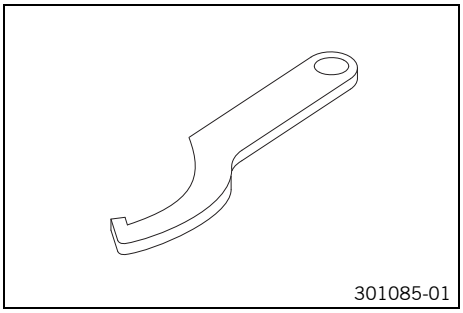


Art. no.: T106S

## Depth micrometer

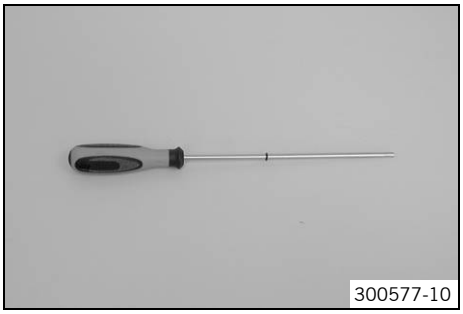


Art. no.: T107S

## Pin

Art. no.: T120

## Pressing tool

Art. no.: T1206

## Pressing tool

Art. no.: T1207S

## Vacuum pump

200273-10

Art. no.: T1240S

## Pressing tool

200584-01

Art. no.: T129

## Protecting sleeve

200635-10

Art. no.: T1401

## Gripping tool

200639-10

Art. no.: T14026S1

## Open-end wrench

200640-10

Art. no.: T14032

## Clamping stand

200637-10

Art. no.: T1403S

## Mounting tool

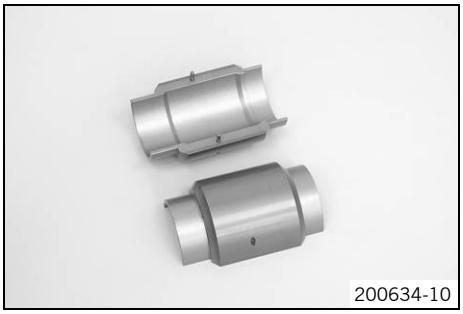
200634-10

Art. no.: T14040S

## Mounting sleeve

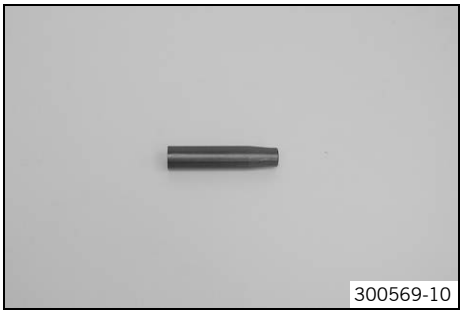
300569-10

Art. no.: T1515

## Nitrogen filling tool

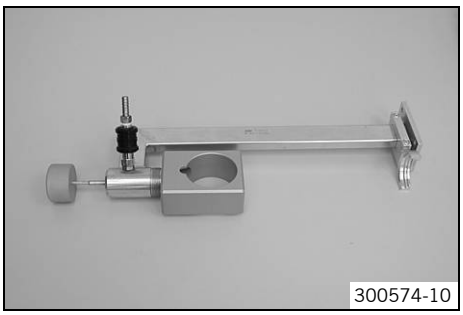
300574-10

Art. no.: T170S1

## JASO T903 MA

Different technical development directions required a new specification for 4-stroke motorcycles – the JASO T903 MA Standard. Earlier, engine oils from the automobile industry were used for 4-stroke motorcycles because there was no separate motorcycle specification. Whereas long service intervals are demanded for automobile engines, high performance at high engine speeds are in the foreground for motorcycle engines. In most motorcycles, the gearbox and the clutch are lubricated with the same oil as the engine. The JASO MA Standard meets these special requirements.

## SAE

The SAE viscosity classes were defined by the Society of Automotive Engineers and are used for classifying oils according to their viscosity. The viscosity describes only one property of oil and says nothing about quality.

**A**

**Accessories** . . . . . 7

**Air filter**
installing . . . . . 57
removing . . . . . 57

**Air filter box**
fitting . . . . . 59
removing . . . . . 57

**Alternator**
stator winding, checking . . . . . 187

**Antifreeze**
checking . . . . . 179

**Assembling the engine**
alternator cover, installing . . . . . 171
camshafts, installing . . . . . 167
clutch basket, installing . . . . . 159
clutch cover, installing . . . . . 161
crankshaft and balancer shaft, installing . . . . . 155
crankshaft position sensor distance, adjusting . . . . . 163
cylinder head, installing . . . . . 166
engine, setting to top dead center . . . . . 164
gear position sensor, installing . . . . . 171
ignition pulse generator, installing . . . . . 162
left engine case, installing . . . . . 156
locking lever, installing . . . . . 158
oil filter, installing . . . . . 170
oil pumps, installing . . . . . 157
oil screens, installing . . . . . 172
piston, installing . . . . . 164
primary gear, installing . . . . . 159
rotor, installing . . . . . 163
shift drum locating, installing . . . . . 158
shift shaft, installing . . . . . 158
spacer and spring, installing . . . . . 161
spacer, installing . . . . . 171
spark plugs, installing . . . . . 170
starter drive, installing . . . . . 158
starter motor, installing . . . . . 172
taking engine off universal mounting rack . . . . . 173
thermostat, installing . . . . . 170
timing chain and timing chain sprocket, installing . . . . 162
timing chain rails, installing . . . . . 162
timing chain tensioner, installing . . . . . 167
transmission shafts, installing . . . . . 154
valve clearance, adjusting . . . . . 169
valve clearance, checking . . . . . 168
valve cover, installing . . . . . 173
water pump cover, mounting . . . . . 164

**Auxiliary substances** . . . . . 7

**B**

**Battery**
connecting . . . . . 83
disconnecting . . . . . 83
fitting . . . . . 82
recharging . . . . . 83
removing . . . . . 82

**Brake disc**
front brake, installing . . . . . 74
front brake, removing . . . . . 74
rear brake, installing . . . . . 76
rear brake, removing . . . . . 76

**Brake discs**
checking . . . . . 71

**Brake fluid**
front brake, adding . . . . . 91
front brake, changing . . . . . 92
rear brake, adding . . . . . 96
rear brake, changing . . . . . 97

**Brake fluid level**
checking the brake fluid level of front brake . . . . . 90
rear brake, checking . . . . . 95

**Brake linings**
front brake, changing . . . . . 89
front brake, checking . . . . . 89
rear brake, changing . . . . . 93
rear brake, checking . . . . . 93

**C**

**Capacity**
coolant . . . . . 193
engine oil . . . . . 111, 186, 193
fuel . . . . . 193

**Chain**
checking . . . . . 78
cleaning . . . . . 80

**Chain guide**
adjusting . . . . . 78
checking . . . . . 78

**Chain tension**
adjusting . . . . . 77
checking . . . . . 77

**Changing turn signal bulb** . . . . . 104

**Charging voltage**
checking . . . . . 84

**Chassis number** . . . . . 8

**Clutch**
checking/correcting fluid level . . . . . 174
fluid, changing . . . . . 174

**Combination instrument**
clock, setting . . . . . 99
kilometers or miles, setting . . . . . 99
**TRIP 1** display, setting/resetting . . . . . 99
**TRIP 2** display, setting/resetting . . . . . 99
wheel circumference, setting . . . . . 100

**Coolant**
draining . . . . . 178

**Coolant level**
checking . . . . . 179-180

**Cooling system**
filling/bleeding . . . . . 178

**Cylinder - Nikasil® coating** . . . . . 132

**D**

**Disassembling the engine**
alternator cover, removing . . . . . 112
camshafts, removing . . . . . 114

clutch basket, removing . . . 119
clutch cover, removing . . . 118
crankshaft and balancer shaft, removing . . . 124
cylinder head, removing . . . 115
engine oil, draining . . . 111
engine, setting to ignition top dead center . . . 113
gear position sensor, removing . . . 113
ignition pulse generator, removing . . . 118
left engine case, removing . . . 123
locking lever, removing . . . 122
oil filter, removing . . . 113
oil pumps, removing . . . 122
piston, removing . . . 115
primary gear, removing . . . 120
rotor, removing . . . 116
shift drum locating, removing . . . 121
shift shaft, removing . . . 121
spacer and spring, removing . . . 118
spacer, removing . . . 112
spark plugs, removing . . . 114
starter drive, removing . . . 120
starter motor, removing . . . 112
thermostat, removing . . . 113
timing chain and timing chain sprocket, removing . . . 117
timing chain rails, removing . . . 117
timing chain tensioner, removing . . . 114
transmission shafts, removing . . . 124
valve cover, removing . . . 112
water pump impeller, removing . . . 116

**E**

**Engine**
installing . . . 107
removing . . . 105

**Engine - Work on individual parts**
antihopping clutch, disassembling . . . 142
antihopping clutch, preassembling . . . 144
autodecompressor . . . 135
axial clearance of crankshaft and balancer shaft, measuring . . . 131
balancer shaft drive wheel, installing . . . 130
balancer shaft drive wheel, removing . . . 128
camshaft bearing, changing . . . 138
clutch cover . . . 128
clutch, checking . . . 143
connecting rod, conrod bearing, and crank pin, changing 128
countershaft, assembling . . . 151
countershaft, disassembling . . . 148
crankshaft bearing inner ring, installing . . . 131
crankshaft bearing inner ring, removing . . . 128
crankshaft run-out at bearing pin, checking . . . 130
cylinder - **Nikasil®** coating . . . 132
cylinder head, checking . . . 140
cylinder, checking/measuring . . . 132
freewheel, checking . . . 153
freewheel, installing . . . 153
freewheel, removing . . . 153
left engine case section . . . 126
main shaft, assembling . . . 150
main shaft, disassembling . . . 147
oil pumps, checking for wear . . . 134
piston ring end gap, checking . . . 134
piston, checking/measuring . . . 133
piston/cylinder mounting clearance, determining . . . 134
right engine case section . . . 125
rocker arm, installing . . . 142
rocker arm, removing . . . 138
shift mechanism, checking . . . 145
shift shaft, preassembling . . . 146
starter drive, checking . . . 152
timing assembly, checking . . . 137
timing chain tensioner, preparing for installation . . . 136
transmission, checking . . . 148
valve spring retainer, checking . . . 140
valve springs, checking . . . 140
valves, checking . . . 140
valves, installing . . . 141
valves, removing . . . 139

**Engine characteristic**
adjusting . . . 87

**Engine disassembly**
engine, clamping into the engine assembly stand . . . 111

**Engine number** . . . 8

**Engine oil**
adding . . . 186
changing . . . 183
draining . . . 183
refilling . . . 186

**Engine oil level**
checking . . . 181

**Engine oil pressure**
checking . . . 182

**Engine sprocket**
checking . . . 78

**F**

**Figures** . . . 7

**Filler cap**
closing . . . 61
opening . . . 61

**Foot brake lever**
basic position, adjusting . . . 95
free travel, checking . . . 95

**Fork**
compression damping, adjusting . . . 14
dust boots, cleaning . . . 15
fork legs, bleeding . . . 15
rebound, adjusting . . . 14

**Fork legs**
assembling . . . 22
checking . . . 21
disassembling . . . 18
fitting . . . 17
removing . . . 16

**Fork part number** . . . 8

**Fork protector**
installing . . . 16
removing . . . 15

**Front wheel**
fitting . . . 73
removing . . . 72
**Fuel filter**
changing . . . 64, 67
**Fuel pressure**
checking . . . 62
**Fuse**
of individual power consumer, changing . . . 86

**G**

**Gear position sensor**
changing . . . 175
programming . . . 177

**H**

**Hand brake lever**
basic position, adjusting . . . 90
**Handlebar position** . . . 28
adjusting . . . 28
**Headlight**
light range, adjusting . . . 101
**Headlight bulb, changing** . . . 103
**Headlight mask with headlight**
installing . . . 102
removing . . . 101
**Headlight setting, checking** . . . 101

**I**

**Ignition coil**
secondary winding, checking . . . 188
**Initialization run**
performing . . . 189

**K**

**Key number** . . . 8

**M**

**Main fuse**
changing . . . 85
**Main silencer**
installing . . . 56
removing . . . 55
**Manifold**
installing . . . 54
removing . . . 53
**Motorcycle**
cleaning . . . 198
raising with lift stand . . . 11
raising with the front wheel stand . . . 10
raising with the rear wheel stand . . . 10
raising with work stand . . . 11
removing from the lift stand . . . 11
removing from work stand . . . 12
taking off of the front wheel stand . . . 11
taking off of the rear wheel stand . . . 10

**O**

**Oil circuit** . . . 181
**Oil filter**
changing . . . 183
installing . . . 184
removing . . . 184
**Oil screens**
cleaning . . . 183, 185
**Operating substances** . . . 7

**P**

**Parking light bulb**
changing . . . 102
**Preparing for use**
after storage . . . 200

**R**

**Rear hub rubber dampers**
checking . . . 80
**Rear sprocket**
checking . . . 78
**Rear wheel**
installing . . . 75
removing . . . 74
**Riding sag**
adjusting . . . 36
**Rim run-out**
checking . . . 72

**S**

**Seat**
mounting . . . 62
removing . . . 61
**Service schedule** . . . 201
**Servicing the shock absorber** . . . 39
**Shock absorber**
compression damping, high-speed, adjusting . . . 33
compression damping, low-speed, adjusting . . . 33
damper, assembling . . . 46
damper, bleeding and filling . . . 48
damper, checking . . . 42
damper, dismantling . . . 40
damper, filling with nitrogen . . . 50
heim joint, installing . . . 44
heim joint, removing . . . 43
installing . . . 37
piston rod, assembling . . . 45
piston rod, disassembling . . . 41
rebound damping, adjusting . . . 34
removing . . . 36
riding sag, checking . . . 35
shock absorber, servicing . . . 39
spring preload, adjusting . . . 35
spring, installing . . . 51
spring, removing . . . 39
static sag, checking . . . 34
**Shock absorber part number** . . . 9
**Side cover**
mounting . . . 62
removing . . . 62
**Spare parts** . . . 7

**Spark plug connector**
checking . . . . . 187
**Spoke tension**
checking . . . . . 71
**Starting** . . . . . 12
**Starting procedure**
for making checks . . . . . 13
**Steering head bearing play**
adjusting . . . . . 26
checking . . . . . 26
**Storage** . . . . . 200

**T**

**Technical data**
capacities . . . . . 193
chassis . . . . . 194
chassis tightening torques . . . . . 196
electrical system . . . . . 194
engine . . . . . 190
engine tightening torques . . . . . 192
engine tolerance, wear limits . . . . . 190
fork . . . . . 195
shock absorber . . . . . 195
tires . . . . . 195
**Throttle grip**
changing . . . . . 28
**Tire air pressure**
checking . . . . . 70
**Tire condition**
checking . . . . . 70
**Type label** . . . . . 8

**W**

**Warranty** . . . . . 7
**Winter operation**
checks and maintenance steps . . . . . 199
**Wiring diagram** . . . . . 202-223
page 01 of 11 . . . . . 202
page 02 of 11 . . . . . 204
page 03 of 11 . . . . . 206
page 04 of 11 . . . . . 208
page 05 of 11 . . . . . 210
page 06 of 11 . . . . . 212
page 07 of 11 . . . . . 214
page 08 of 11 . . . . . 216
page 09 of 11 . . . . . 218
page 10 of 11 . . . . . 220
page 11 of 11 . . . . . 222
**Work rules** . . . . . 6

WWW.KTM.COM

3206193en

03/2014

**KTM-Sportmotorcycle AG**
*5230 Mattighofen/Austria*
***http://www.ktm.com***

Photo: Mitterbauer/KTM