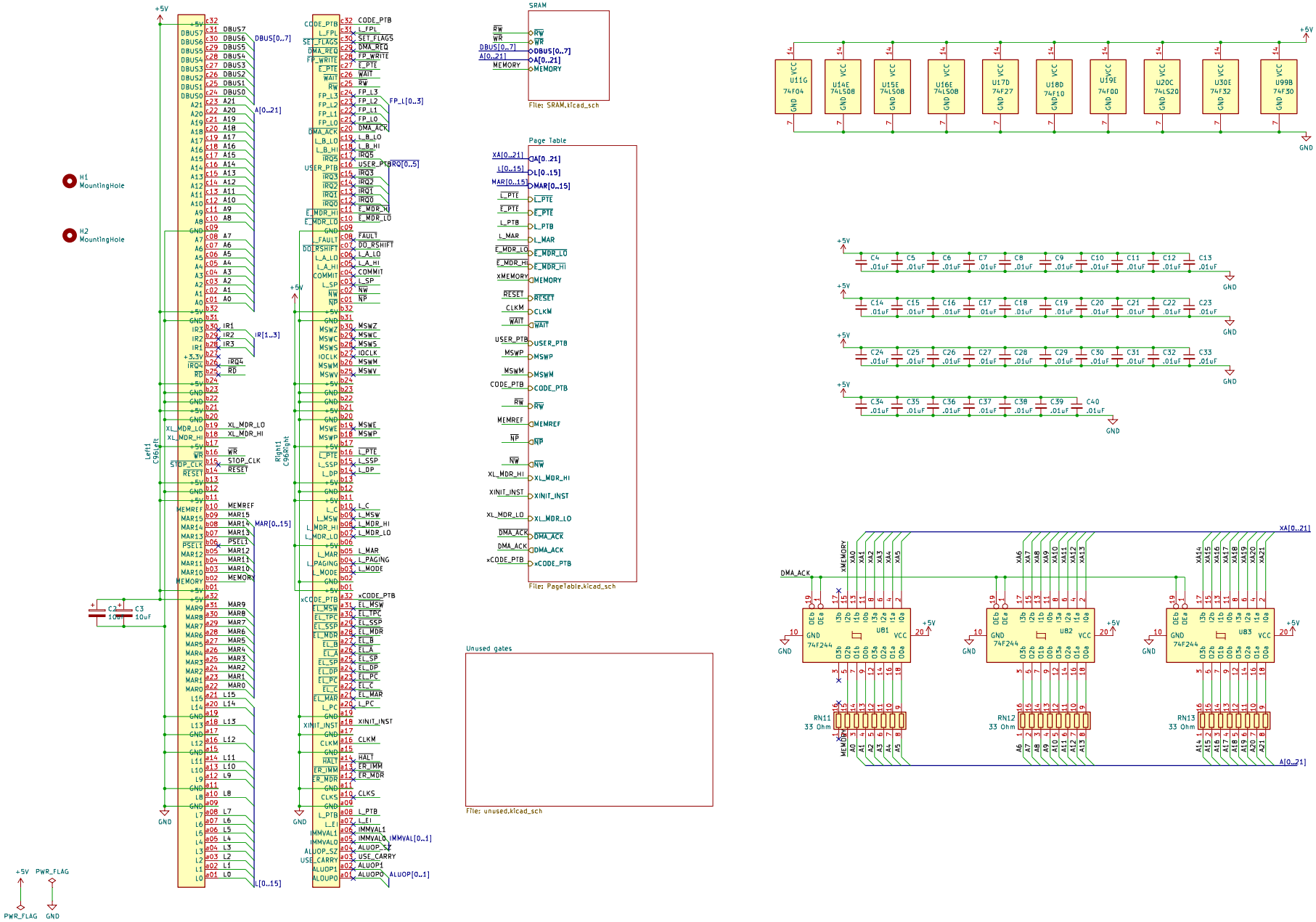
H1
MountingHole
H2
MountingHole
Left1
C96Left
Right1
C96Right
DBUS[0..7]
A[0..21]
IR[1..3]
MAR[0..15]
L[0..15]
IRQ[0..5]
FP_L[0..3]
IMMVAL[0..1]
ALUOP[0..1]
C2 100uF
C3 10uF
+5V
GND
PWR_FLAG
SRAM
File: SRAM.kicad_sch
Page Table
File: PageTable.kicad_sch
Unused gates
File: unused.kicad_sch
U11G 74F04
U14E 74LS08
U15E 74LS08
U16E 74LS08
U17D 74F27
U18D 74F10
U19E 74F00
U20C 74LS20
U30E 74F32
U99B 74F30
C4 .01uF
C5 .01uF
C6 .01uF
C7 .01uF
C8 .01uF
C9 .01uF
C10 .01uF
C11 .01uF
C12 .01uF
C13 .01uF
C14 .01uF
C15 .01uF
C16 .01uF
C17 .01uF
C18 .01uF
C19 .01uF
C20 .01uF
C21 .01uF
C22 .01uF
C23 .01uF
C24 .01uF
C25 .01uF
C26 .01uF
C27 .01uF
C28 .01uF
C29 .01uF
C30 .01uF
C31 .01uF
C32 .01uF
C33 .01uF
C34 .01uF
C35 .01uF
C36 .01uF
C37 .01uF
C38 .01uF
C39 .01uF
C40 .01uF
XA[0..21]
U81 74F244
U82 74F244
U83 74F244
RN11 33 Ohm
RN12 33 Ohm
RN13 33 Ohm
DMA_ACK
XMEMORY
MEMORY

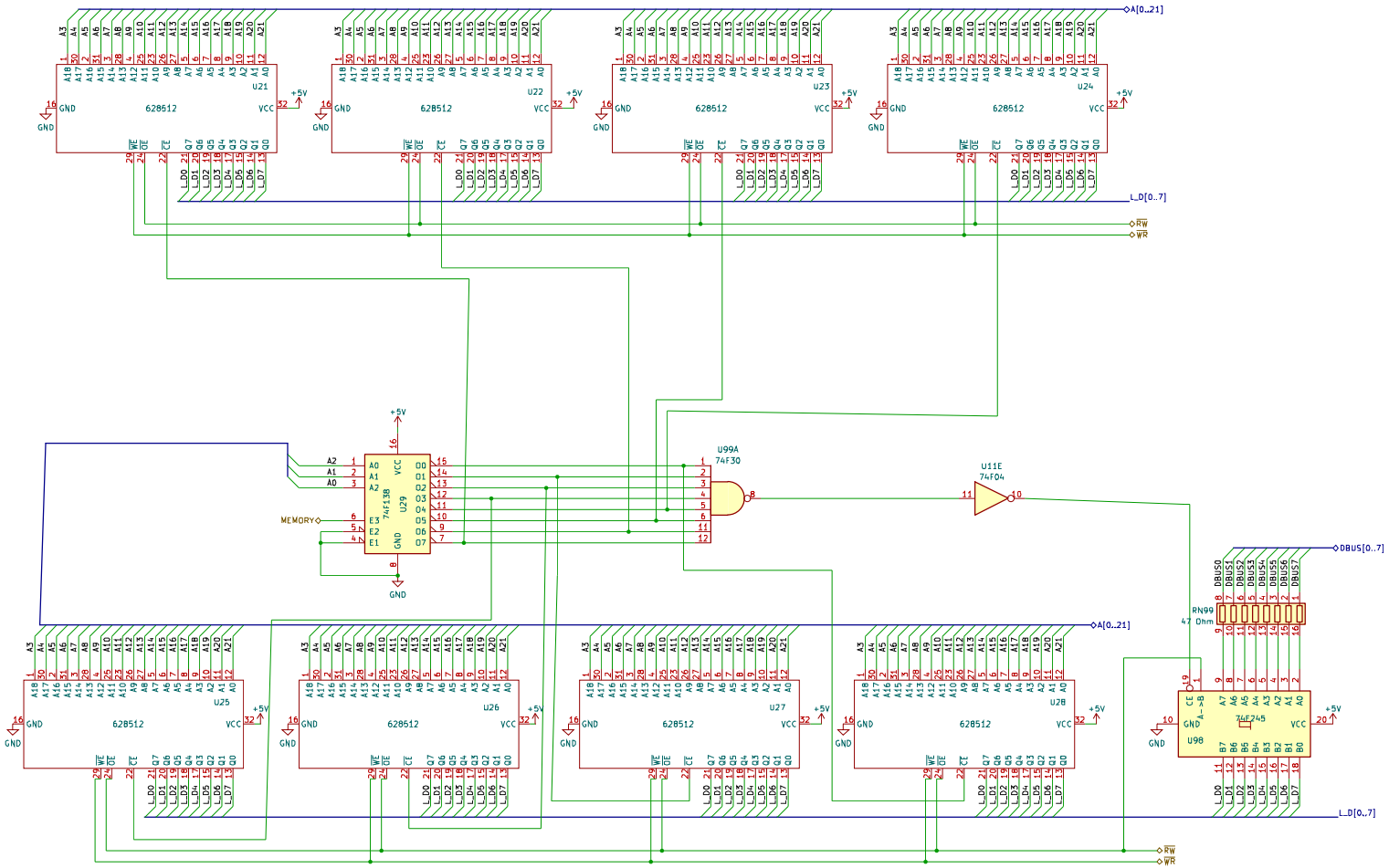
A[0..21]
L_D[0..7]
RW
WR
U21
U22
U23
U24
U25
U26
U27
U28
628512
U29
74F138
U99A
74F30
U11E
74F04
MEMORY
RN99
47 Ohm
DBUS[0..7]
U98
74F245

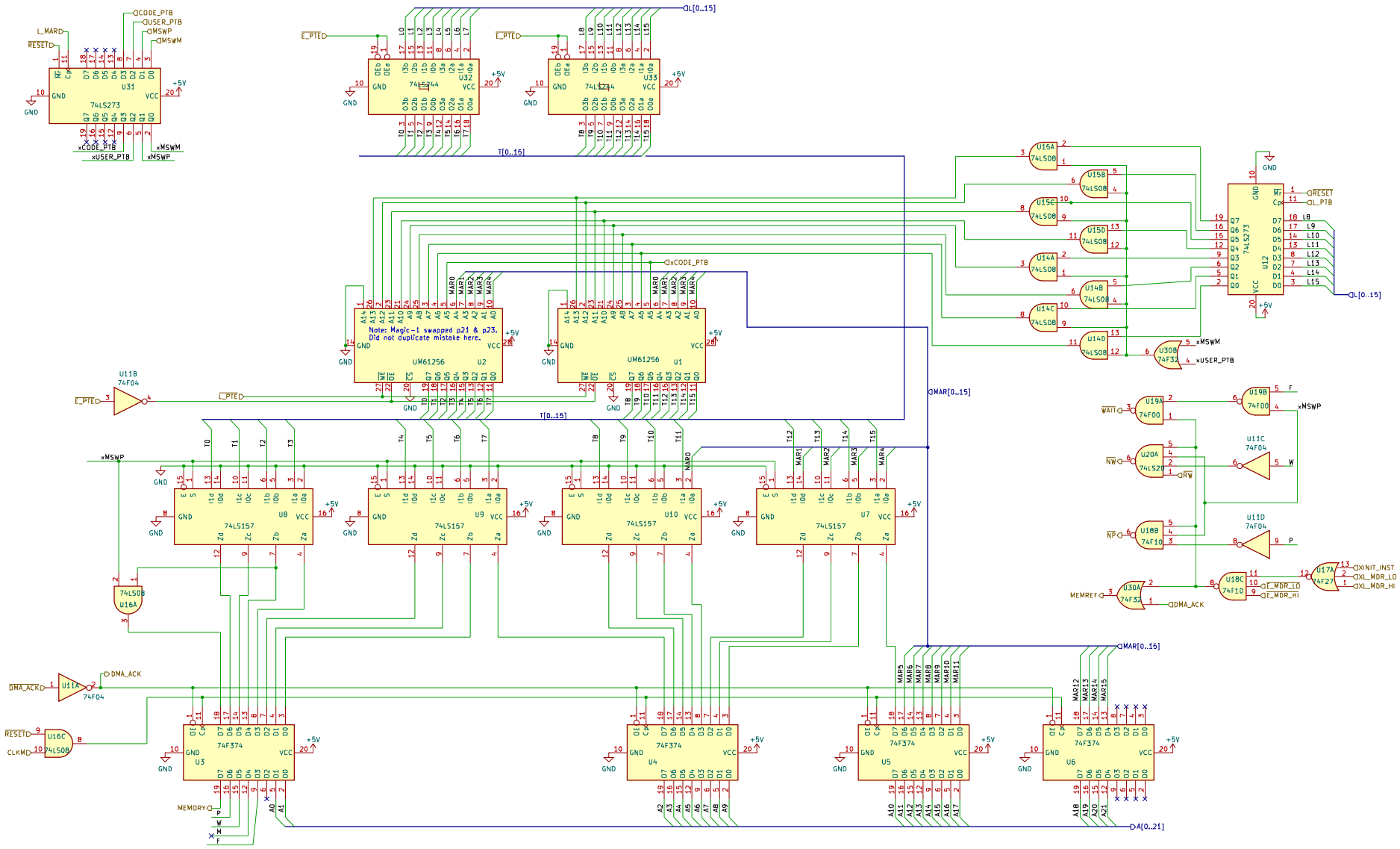
U31
74LS273
U32
74LS244
U33
74LS244
U12
74LS273
U2
UM61256
U1
UM61256
Note: Magic-1 swapped p21 & p23.
Did not duplicate mistake here.
U8
74LS157
U9
74LS157
U10
74LS157
U7
74LS157
U3
74F374
U4
74F374
U5
74F374
U6
74F374
U11B
74F04
U11A
74F04
U11C
74F04
U11D
74F04
U16A
74LS08
U16C
74LS08
U15A
74LS08
U15B
74LS08
U15C
74LS08
U15D
74LS08
U14A
74LS08
U14B
74LS08
U14C
74LS08
U14D
74LS08
U30B
74F32
U30A
74F32
U19A
74F00
U19B
74F00
U20A
74LS20
U18B
74F10
U18C
74F10
U17A
74F27
L_MARD
RESET
CODE_PTB
USER_PTB
MSWP
MSWM
xCODE_PTB
xUSER_PTB
xMSWP
xMSWM
E_PTED
L_PTED
L[0..15]
T[0..15]
MAR[0..15]
A[0..21]
WAIT
NW
NP
MEMREF
DMA_ACK
CLKM
MEMORY
xINIT_INST
XL_MDR_LO
XL_MDR_HI
E_MDR_LO
E_MDR_HI
GND
+5V

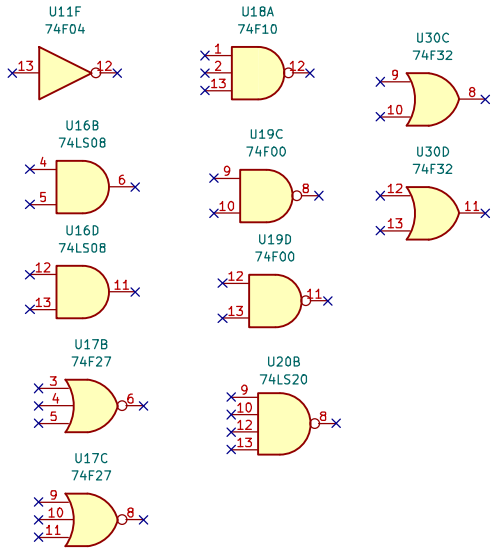
U11F
74F04
13
12
U18A
74F10
1
2
13
12
U30C
74F32
9
10
8
U16B
74LS08
4
5
6
U19C
74F00
9
10
8
U30D
74F32
12
13
11
U16D
74LS08
12
13
11
U19D
74F00
12
13
11
U17B
74F27
3
4
5
6
U20B
74LS20
9
10
12
13
8
U17C
74F27
9
10
11
8