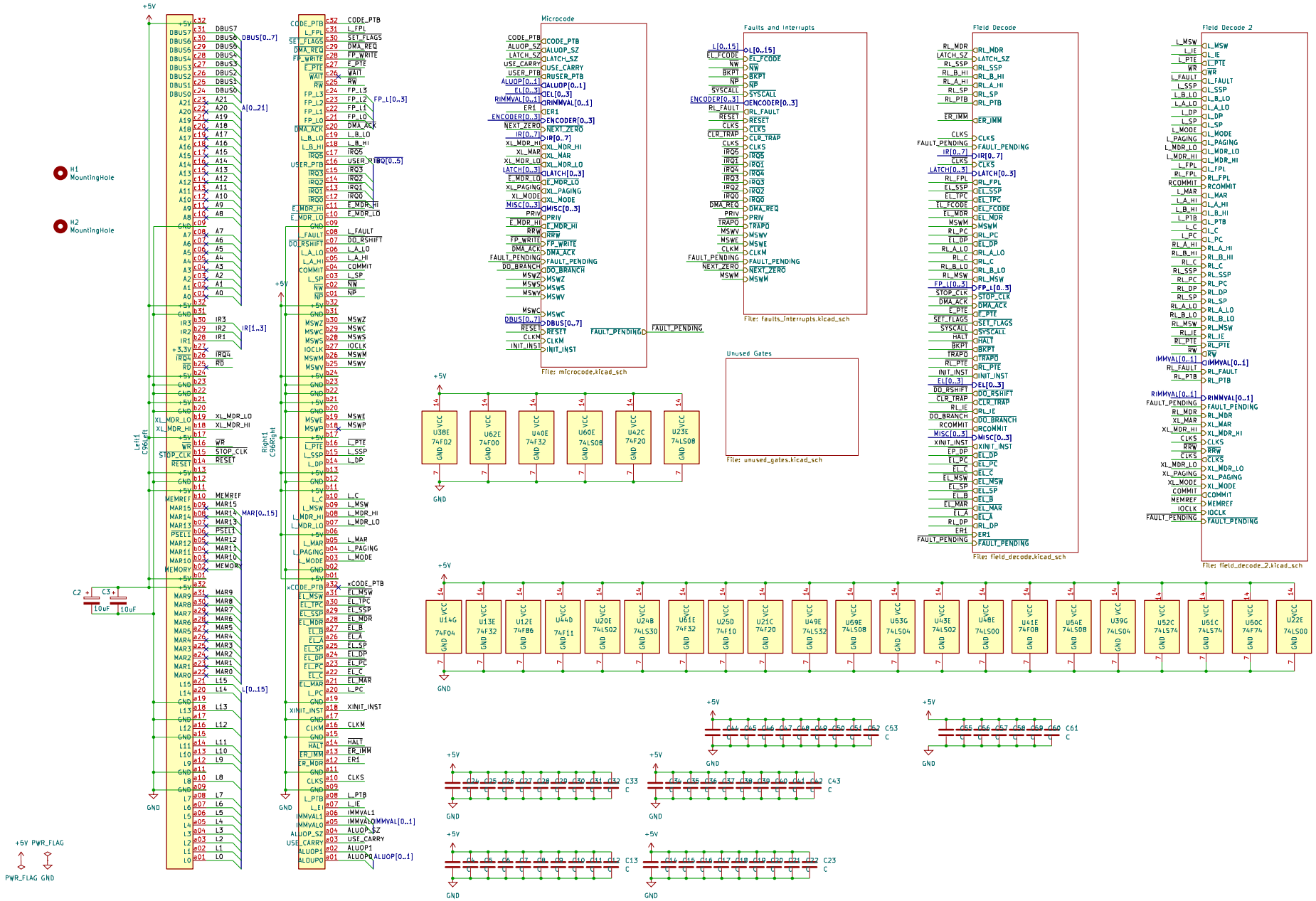
Microcode
File: microcode.kicad_sch
Faults and Interrupts
File: faults_interrupts.kicad_sch
Field Decode
File: field_decode.kicad_sch
Field Decode 2
File: field_decode_2.kicad_sch
Unused Gates
File: unused_gates.kicad_sch
Left1
C96Left
Right1
C96Right
H1
MountingHole
H2
MountingHole
+5V
GND
PWR_FLAG
DBUS[0..7]
A[0..21]
IR[1..3]
MAR[0..15]
L[0..15]
IRQ[0..5]
FP_L[0..3]
ALUOP[0..1]
RIMMVAL[0..1]
FAULT_PENDING
U38E 74F02
U62E 74F00
U40E 74F32
U60E 74LS08
U42C 74F20
U23E 74LS08
U14G 74F04
U13E 74F32
U12E 74F86
U44D 74F11
U20E 74LS02
U24B 74LS30
U61E 74F32
U25D 74F10
U21C 74F20
U49E 74LS32
U59E 74LS08
U53G 74LS04
U43E 74LS02
U48E 74LS00
U41E 74F08
U54E 74LS08
U39G 74LS04
U52C 74LS74
U51C 74LS74
U50C 74F74
U22E 74LS00
C2 10uF
C3 10uF
C53
C61
C33
C43
C13
C23

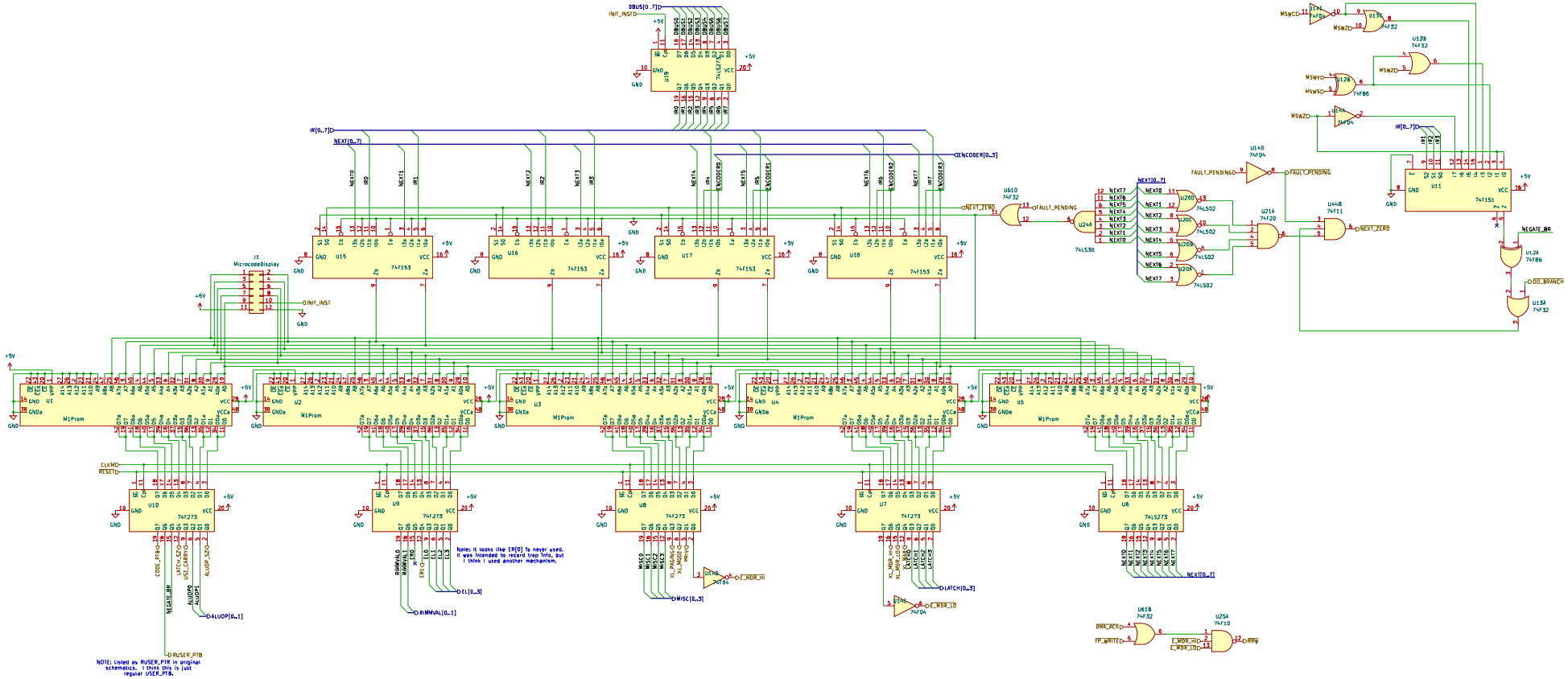

NOTE: Listed as RUSER_PTR in original schematics. I think this is just regular USER_PTB.

Note: It looks like ER[0] is never used. It was intended to record trap info, but I think I used another mechanism.

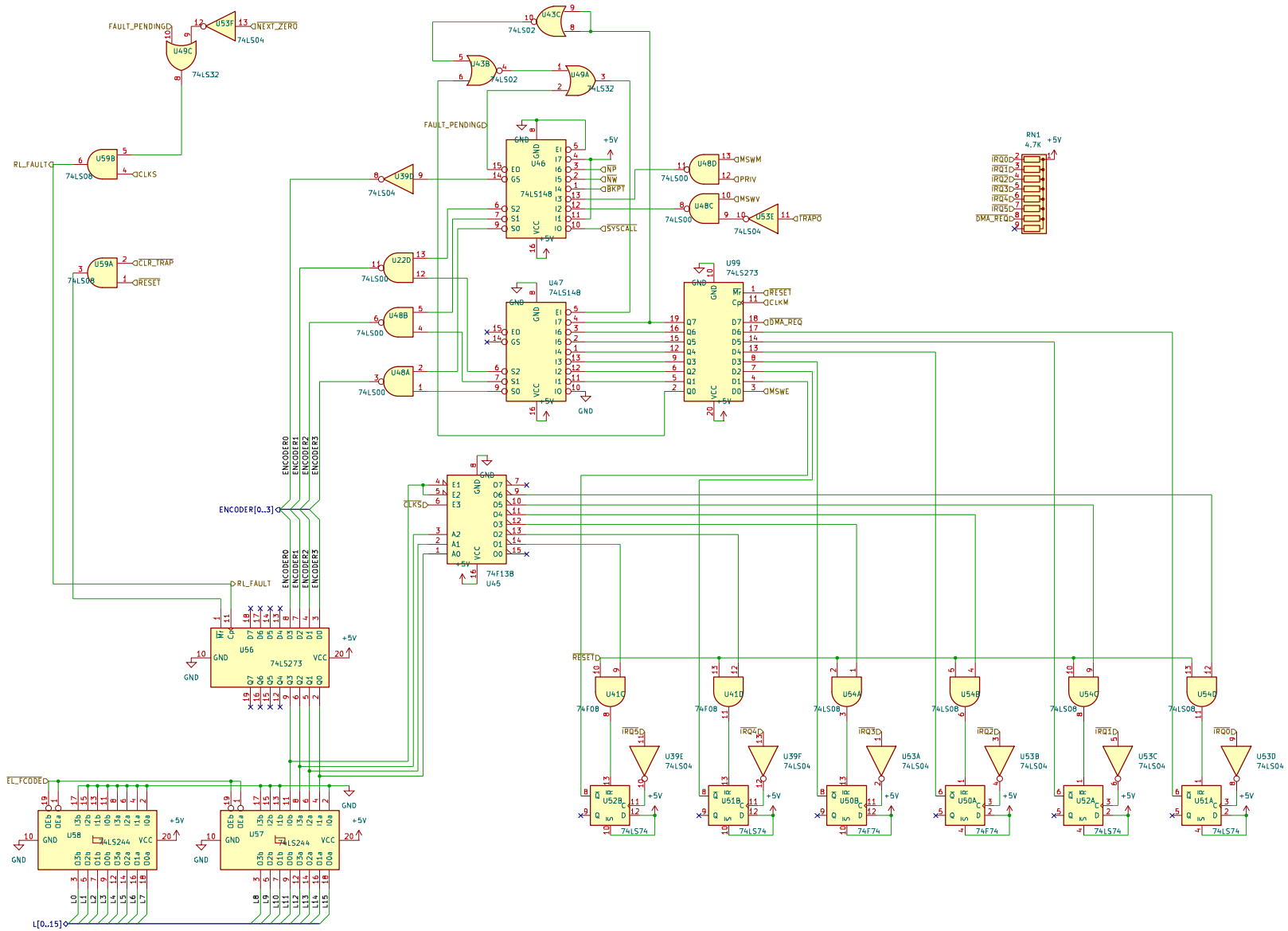
FAULT_PENDING
U53F
74LS04
NEXT_ZERO
U49C
74LS32
U43C
74LS02
U43B
74LS02
U49A
74LS32
FAULT_PENDING
U46
74LS148
NP
NW
BKPT
SYSCALL
RL_FAULT
U59B
74LS08
CLKS
U39D
74LS04
U48D
74LS00
MSWM
PRIV
U48C
74LS00
MSWV
U53E
74LS04
TRAP0
RN1
4.7K
+5V
IRQ0D
IRQ1D
IRQ2D
IRQ3D
IRQ4D
IRQ5D
DMA_REQ
U59A
74LS08
CLR_TRAP
RESET
U22D
74LS00
U48B
74LS00
U48A
74LS00
U47
74LS148
U99
74LS273
RESET
CLKM
DMA_REQ
MSWE
ENCODER0
ENCODER1
ENCODER2
ENCODER3
ENCODER[0..3]
CLKS
74F138
U45
RL_FAULT
U56
74LS273
RESET
U41C
74F08
U41D
74F08
U54A
74LS08
U54B
74LS08
U54C
74LS08
U54D
74LS08
U39E
74LS04
U39F
74LS04
U53A
74LS04
U53B
74LS04
U53C
74LS04
U53D
74LS04
U52B
74LS74
U51B
74LS74
U50B
74F74
U50A
74F74
U52A
74LS74
U51A
74LS74
EL_FCODE
U58
74LS244
U57
74LS244
L[0..15]

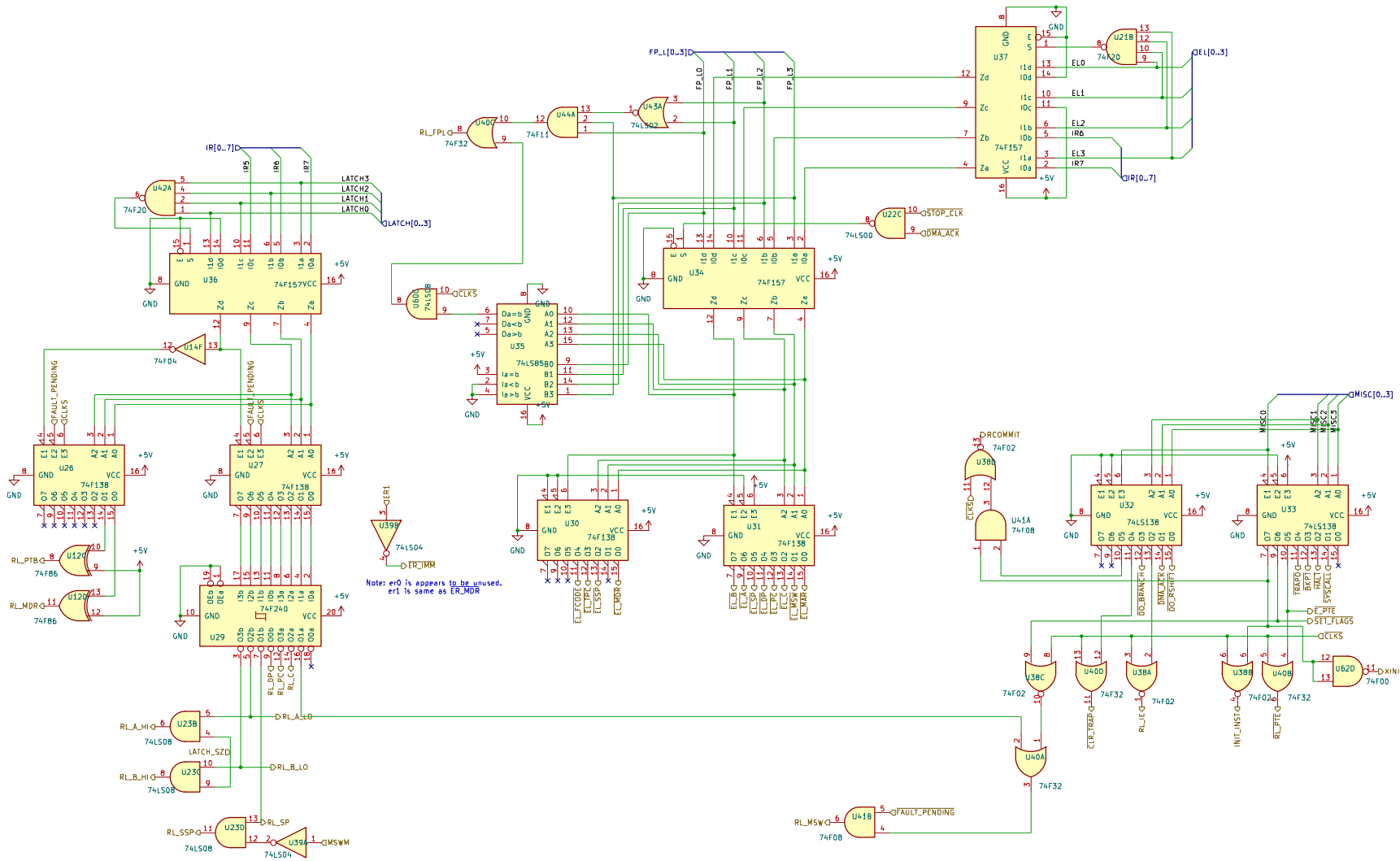
U37
74F157
U21B
74F20
EL[0..3]
EL0
EL1
EL2
EL3
IR6
IR7
IR[0..7]
FP_L[0..3]
FP_L0
FP_L1
FP_L2
FP_L3
U22C
74LS00
STOP_CLK
DMA_ACK
U34
74F157
U44A
74F11
U43A
74LS02
U40C
74F32
RL_FPL
U60C
74LS08
CLKS
U35
74LS85
U42A
74F20
LATCH3
LATCH2
LATCH1
LATCH0
LATCH[0..3]
U36
74F157
U14F
74F04
U26
74F138
U27
74F138
U12C
74F86
U12D
74F86
RL_PTB
RL_MDR
U29
74F240
RL_DP0
RL_PC0
RL_C0
U39B
74LS04
ER1
ER_IMM
Note: er0 is appears to be unused.
er1 is same as ER_MDR
U30
74F138
U31
74F138
EL_FCODE
EL_PPC
EL_SSP
EL_MDR
EL_B
EL_A
EL_SP
EL_DP
EL_PC
EL_C
EL_MSW
EL_MAR
U38D
74F02
RCOMMIT
CLKS
U41A
74F08
U32
74LS138
U33
74LS138
MISC[0..3]
MISC0
MISC1
MISC2
MISC3
DO_BRANCH
DMA_ACK
DO_SWIT
FARFD
BKPT
HALT
SYSCALL
E_PTE
SET_FLAGS
CLKS
U38C
74F02
U40D
74F32
U38A
74F02
U38B
74F02
U40B
74F32
U62D
74F00
XINIT_INST
CLR_TRAP
RL_IE
INIT_INST
RL_PTE
U40A
74F32
RL_MSW
U41B
74F08
FAULT_PENDING
U23B
74LS08
RL_A_HI
RL_A_LO
LATCH_SZD
U23C
RL_B_HI
RL_B_LO
U23D
RL_SSP
RL_SP
U39A
74LS04
MSWM
+5V
GND

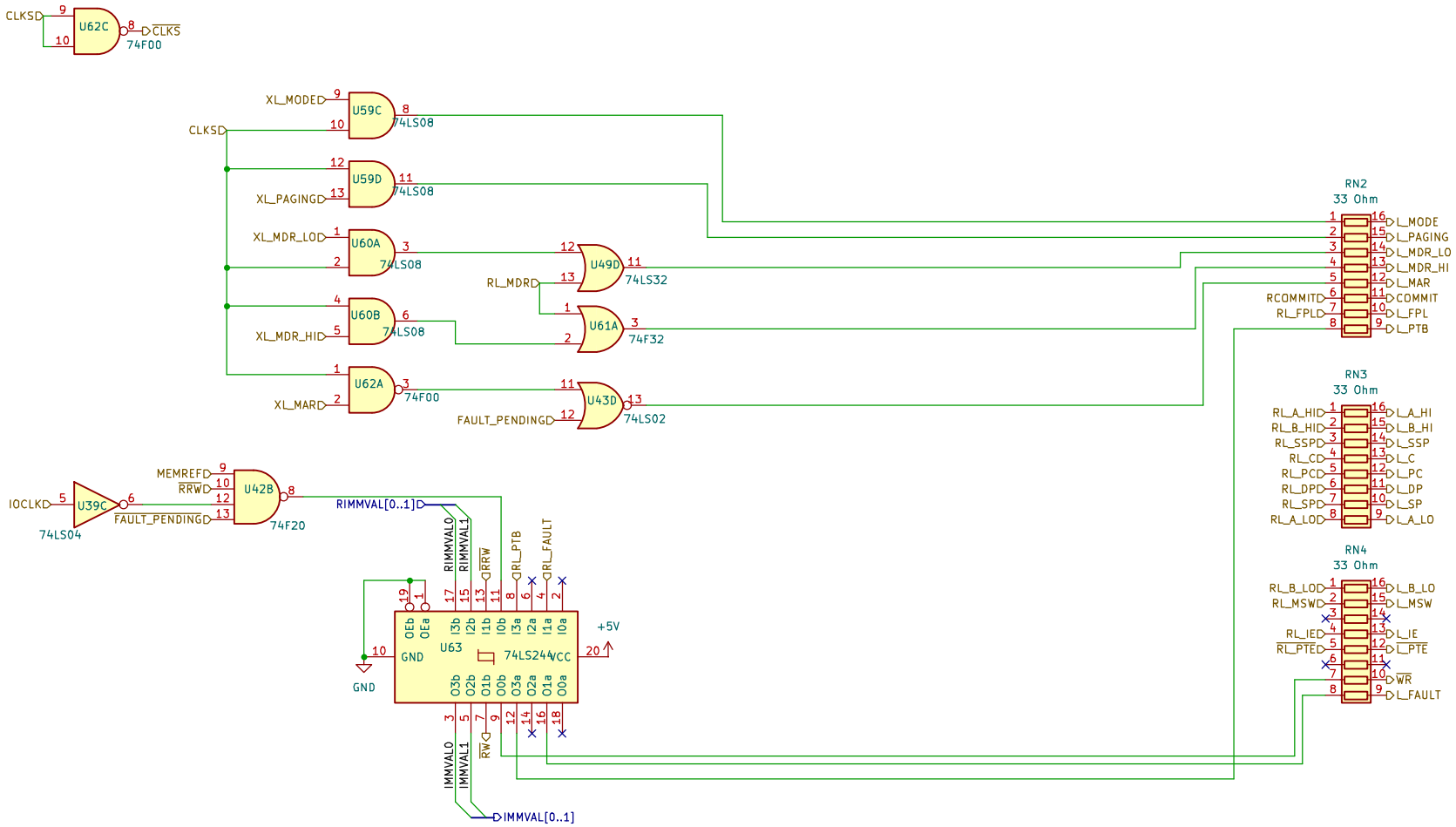
CLKS
U62C
74F00
CLKS
XL_MODE
U59C
74LS08
CLKS
U59D
74LS08
XL_PAGING
XL_MDR_LO
U60A
74LS08
U49D
74LS32
RL_MDRD
U60B
74LS08
XL_MDR_HI
U61A
74F32
U62A
74F00
XL_MAR
U43D
74LS02
FAULT_PENDING
RN2
33 Ohm
L_MODE
L_PAGING
L_MDR_LO
L_MDR_HI
L_MAR
RCOMMIT
COMMIT
RL_FPL
L_FPL
L_PTB
RN3
33 Ohm
RL_A_HI
L_A_HI
RL_B_HI
L_B_HI
RL_SSP
L_SSP
RL_CD
L_C
RL_PC
L_PC
RL_DP
L_DP
RL_SP
L_SP
RL_A_LO
L_A_LO
RN4
33 Ohm
RL_B_LO
L_B_LO
RL_MSW
L_MSW
RL_IE
L_IE
RL_PTE
L_PTE
WR
L_FAULT
IOCLK
U39C
74LS04
MEMREF
RRW
U42B
74F20
FAULT_PENDING
RIMMVAL[0..1]
RIMMVAL0
RIMMVAL1
RRW
RL_PTB
RL_FAULT
U63
74LS244
GND
VCC
+5V
IMMVAL0
IMMVAL1
RW
IMMVAL[0..1]

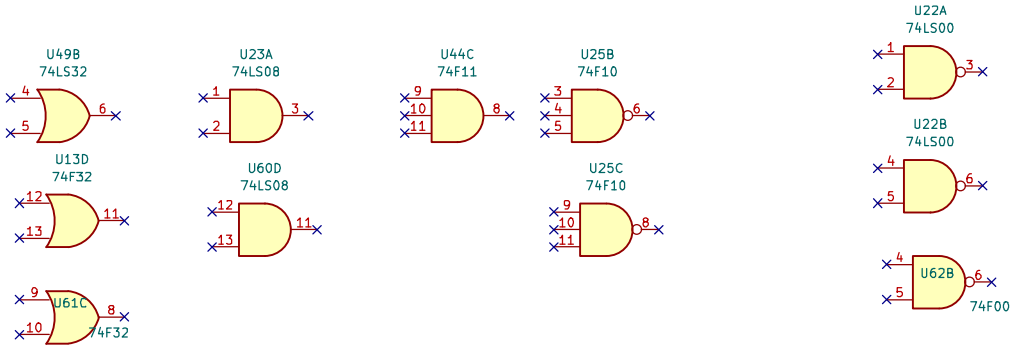
U49B
74LS32
4
5
6
U13D
74F32
12
13
11
U61C
9
10
8
74F32
U23A
74LS08
1
2
3
U60D
74LS08
12
13
11
U44C
74F11
9
10
11
8
U25B
74F10
3
4
5
6
U25C
74F10
9
10
11
8

U22A
74LS00
1
2
3
U22B
74LS00
4
5
6
U62B
4
5
6
74F00