Shaft Collars [A]

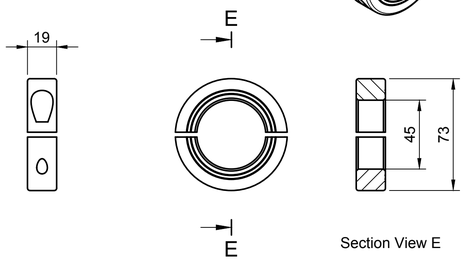

Section View E

Birds Eye View

The screws to use with the shaft collar are 2 M8 x 25mm forged clamp screws.

The Shaft Collar contains an inner diameter of 45mm and an outer diameter of 73mm

Sprocket Gear [B]

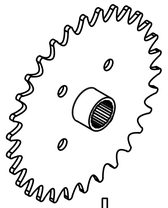

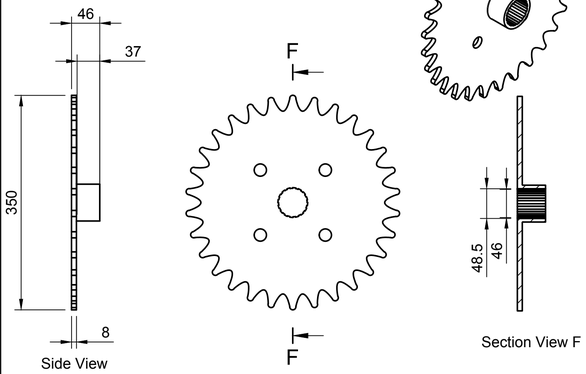

Side View

Section View F

The gear contains 57 Teeth with a pitch of 15.875mm

Contains an inner Spline of 16 Teeth with 1 mm pitch and length of 46. Max Diameter 48.5mm and Min Diameter 46.5mm

Lock Knuts [C]

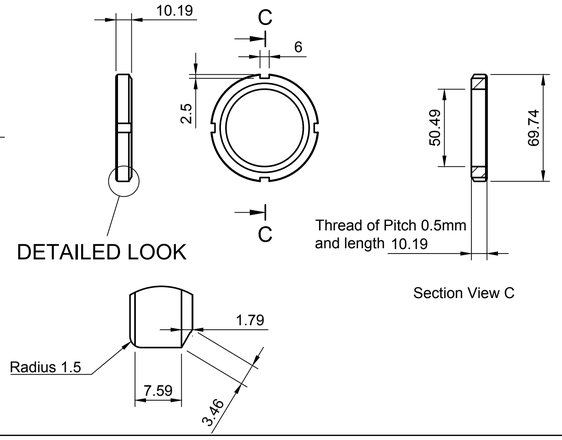

Section View C

Lock Washers [D]

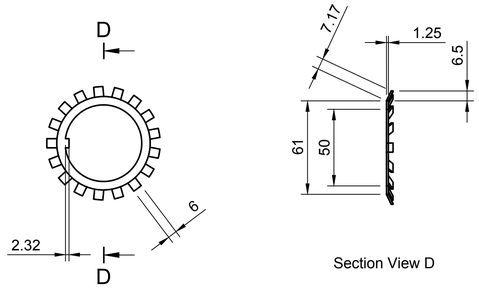

Section View D

Base view of Rear Axle with all components shown.

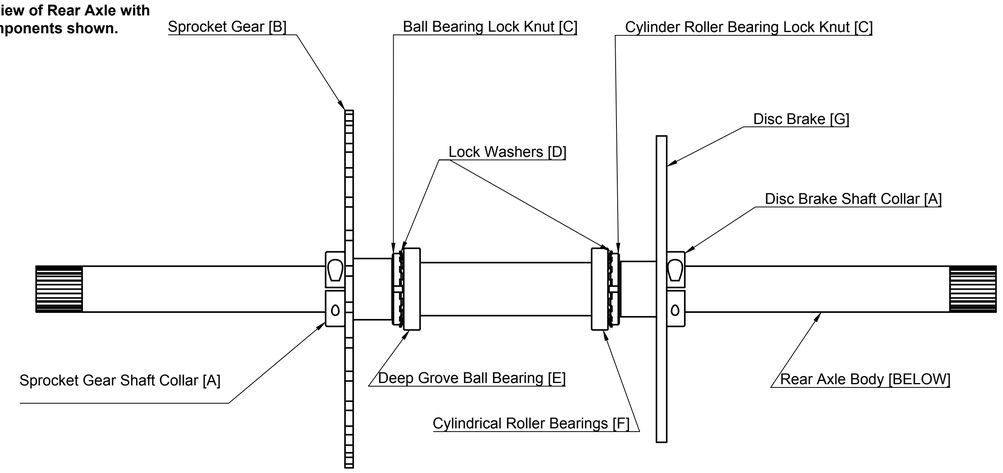

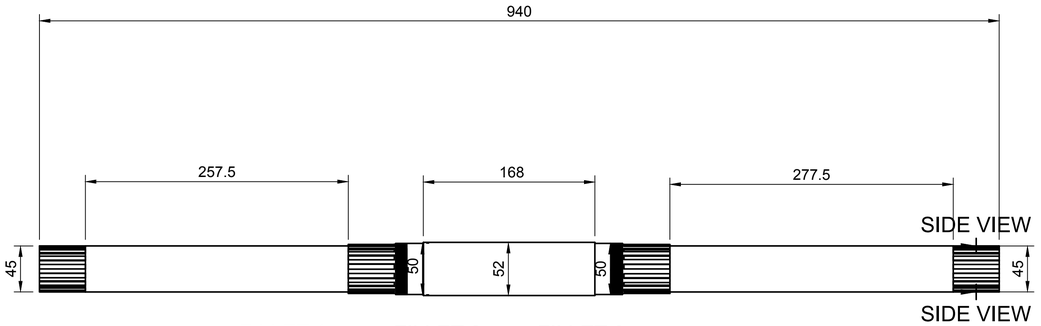

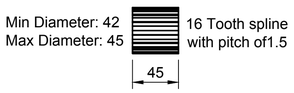

Min Diameter: 42
Max Diameter: 45

16 Tooth spline with pitch of1.5

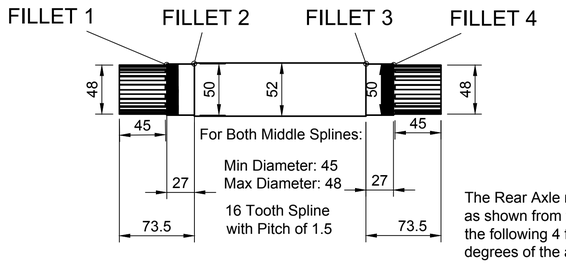

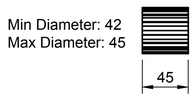

Min Diameter: 42
Max Diameter: 45

16 Tooth spline with pitch of 1.5

The Rear Axle resembles a cylindrical shape as shown from the following side view. Thus the following 4 fillets carry around the 360 degrees of the axle

SIDE VIEW

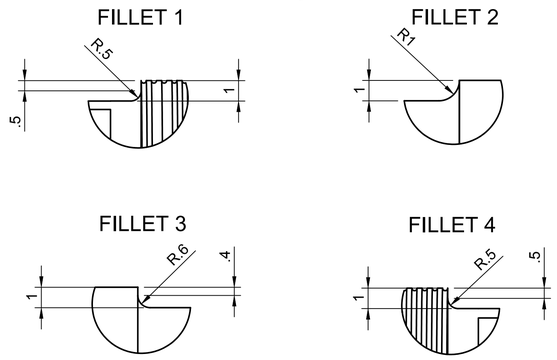

Deep Groove Ball Bearing [E]

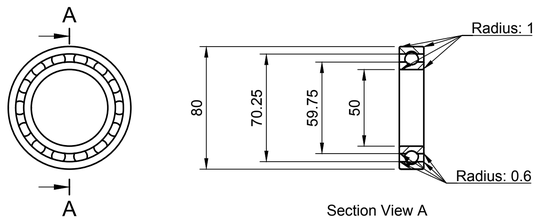

Section View A

Cylindrical Roller Bearing [F]

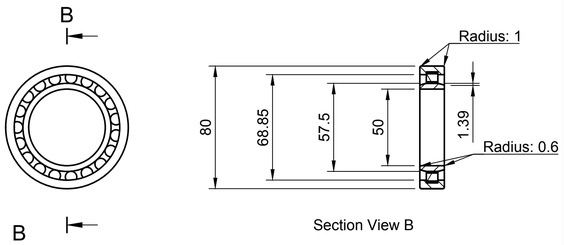

Section View B

Disc Brake [G]

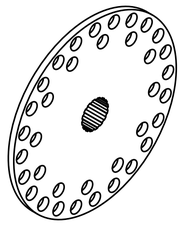

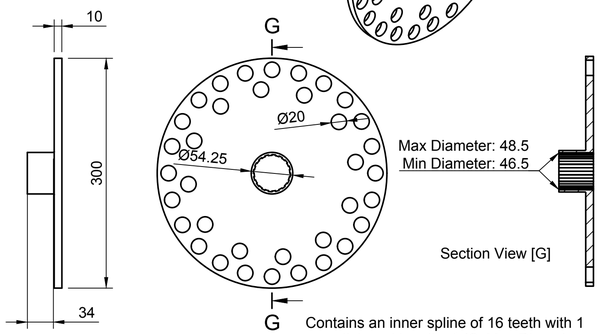

Side View

Section View [G]

Contains an inner spline of 16 teeth with 1 mm pitch and length of 46. Max Diameter 48.5mm and Min Diameter 46.5mm

Dept.	Technical reference	Created by	Approved by
		Reuben Marland [ATV]	
All units are in mm unless stated otherwise		Document type	Document status
		Title: Rear Axle for ATV	DWG No.
		Rev.	Date of issue: 15/12/2021 — Sheet: 1/2

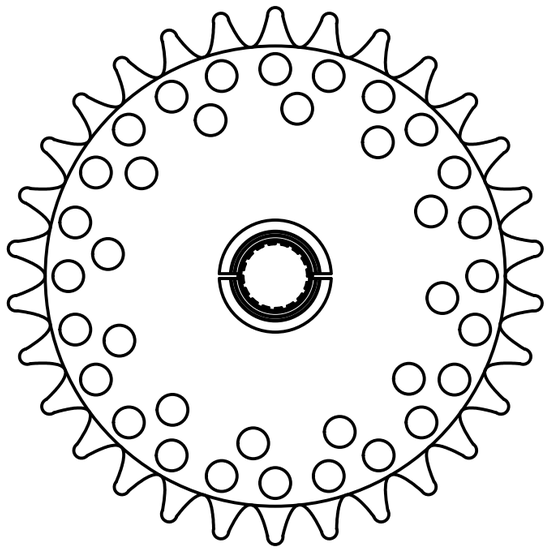

Side View

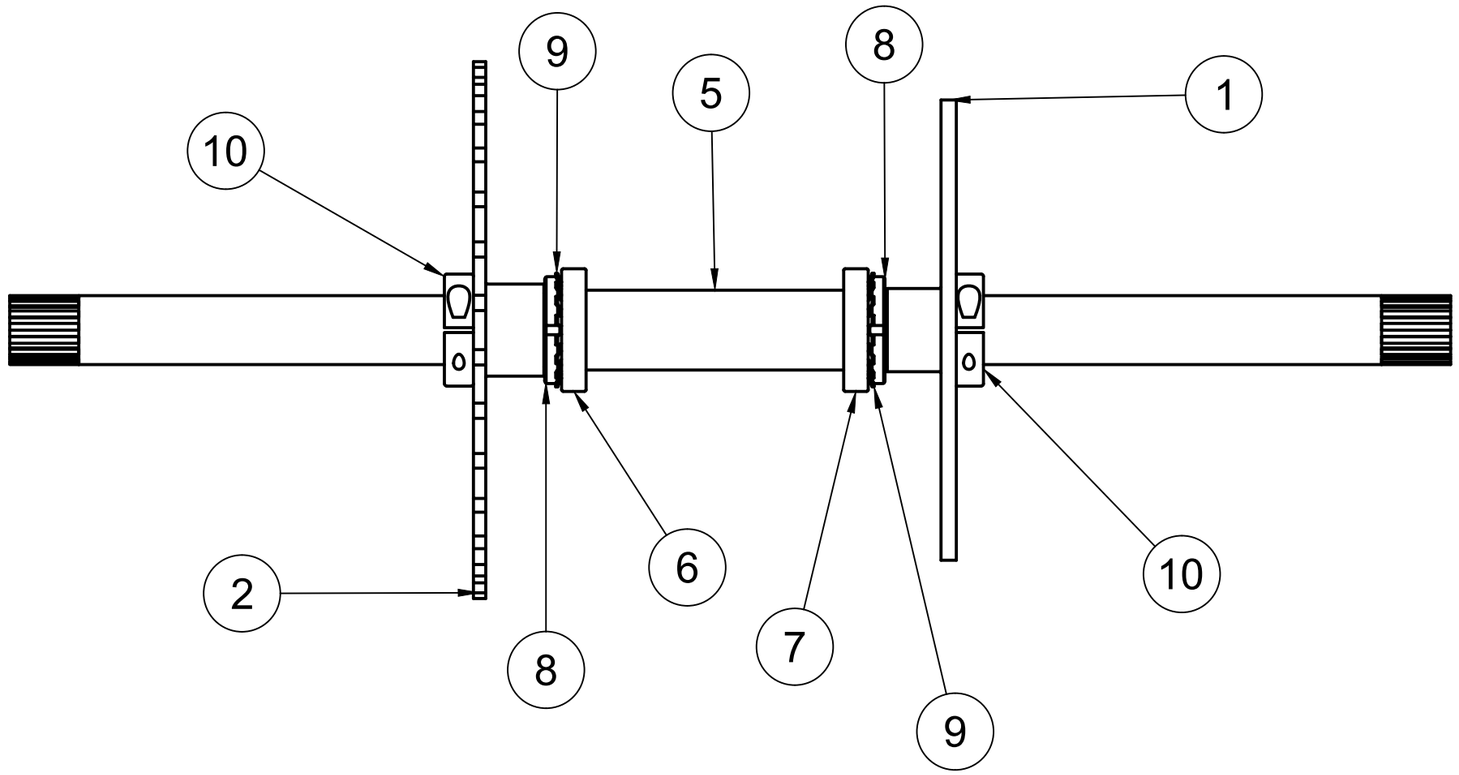

Item	Qty	Part Name	Description	Material
10	2	MSP Series_MSP-45-F v1		Steel
9	2	SKF_MB 10 v1		Steel
8	2	SKF_KM 10 v2		Steel
7	1	SKF_NU 1010 ML v1		Steel
6	1	SKF_6010 v1		Steel
5	1	Rear Axle Body		Titanium
2	1	Sprocket		Steel
1	1	Disc Brake		Steel

Parts List

Dept.	Technical reference	Created by: Reuben Marland [ATV]	Approved by
		Document type	Document status
		Title: Rear Axle for ATV Assembly Drawing	DWG No.
			Rev. / Date of issue: 15/12/2021 / Sheet: 2/2