SOLIDWORKS — Knuckle Joint - Sheet1

Drawing | Annotation | Sketch | Markup | Evaluate | SOLIDWORKS Add-Ins | Sheet Format

- Knuckle Joint
  - Annotations
  - Sheet1
    - Sheet Format1
    - Drawing View1
    - Drawing View2
    - Drawing View3
  - Bill of Materials1

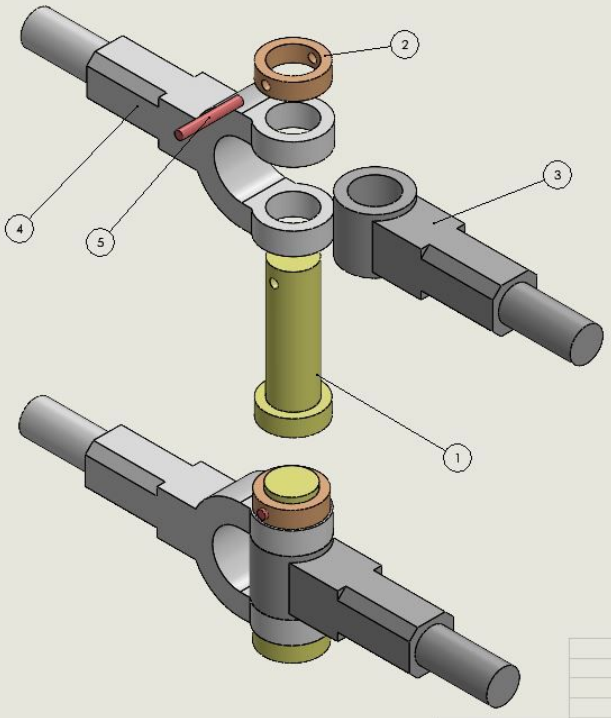

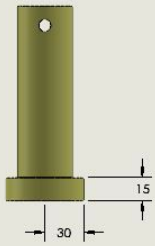

ITEM NO.	PART NUMBER	DESCRIPTION	QTY.
1	Bolt	Main Connection Bolt	1
2	Collar	LockingTop Collar	1
3	Eye	Stainless Steel Eye End	1
4	Fork	Stainless Steel Fork End	1
5	Pin	Locking Pin	1

UNLESS OTHERWISE SPECIFIED: | NAME | DATE
DRAWN
CHECKED
ENG APPR.
MFG APPR.
Q.A.
COMMENTS:
TITLE:
SIZE | DWG. NO. | REV
BKnuckle Joint
SCALE: 1:5 | WEIGHT: | SHEET 1 OF 1
NEXT ASSY | USED ON
APPLICATION
DO NOT SCALE DRAWING

PROPRIETARY AND CONFIDENTIAL

Sheet1

SOLIDWORKS Education Edition - Instructional Use Only | Under Defined | Editing Sheet1 | 1 : 5 | MMGS