Combinational Traffic Light Controller

By students :
Jana Sharaf Alshaikh 2510454
Reuof Abdulwahab Alarishi 2511088
Bayan Saeed Alzahrani 2510762
Rahaf Matar Alrashidi 2510887

➢ Inputs

1) S_main
= 1 → There is a vehicle on the **main road**
= 0 → Main road is empty

2) S_side
= 1 → There is a vehicle on the **side road**
= 0 → Side road is empty

➢ Outputs

1) Main Road Lights
- MR_Red
- MR_Yellow
- MR_Green

2) Side Road Lights
- SR_Red
- SR_Yellow
- SR_Green

Rule 1: Main road priority

- If **both** S_main and S_side = **1**
- If **both** S_main and S_side = **0**
- If S_main = **1 and** S_side = **0**

  → Main road = Green

  → Side road = Red

Rule 2: Side road lights green ONLY if main road is empty

- If S_main = 0 and S_side = 1,

  → Side road = Green

  → Main road = Red

➢ Truth Table

S_main	S_side	MR_G	MR_Y	MR_R	SR_G	SR_Y	SR_R
0	0	1	0	0	0	0	1
1	0	1	0	0	0	0	1
0	1	0	0	1	1	0	0
1	1	1	0	0	0	0	1

- Equations

1-MR_G

S_side S_main	0	1
0	1	0
1	1	1

MR_G=S_side'+S_main

2_MR_Y

S_side S_main	0	1
0	0	0
1	0	0

MR_Y=0

3-MR_R

S_side S_main	0	1
0	0	1
1	0	0

MR_R=S_main'*S_side

4-SR_G

S_side S_main	0	1
0	0	1
1	0	0

SR_G=S_main*S_side

5-SR_Y

S_side S_main	0	1
0	0	0
1	0	0

SR_Y=0

6-SR_R

S_side S_main	0	1
0	1	0
1	1	1

SR_R=S_side’+S_main

➢ Circuit

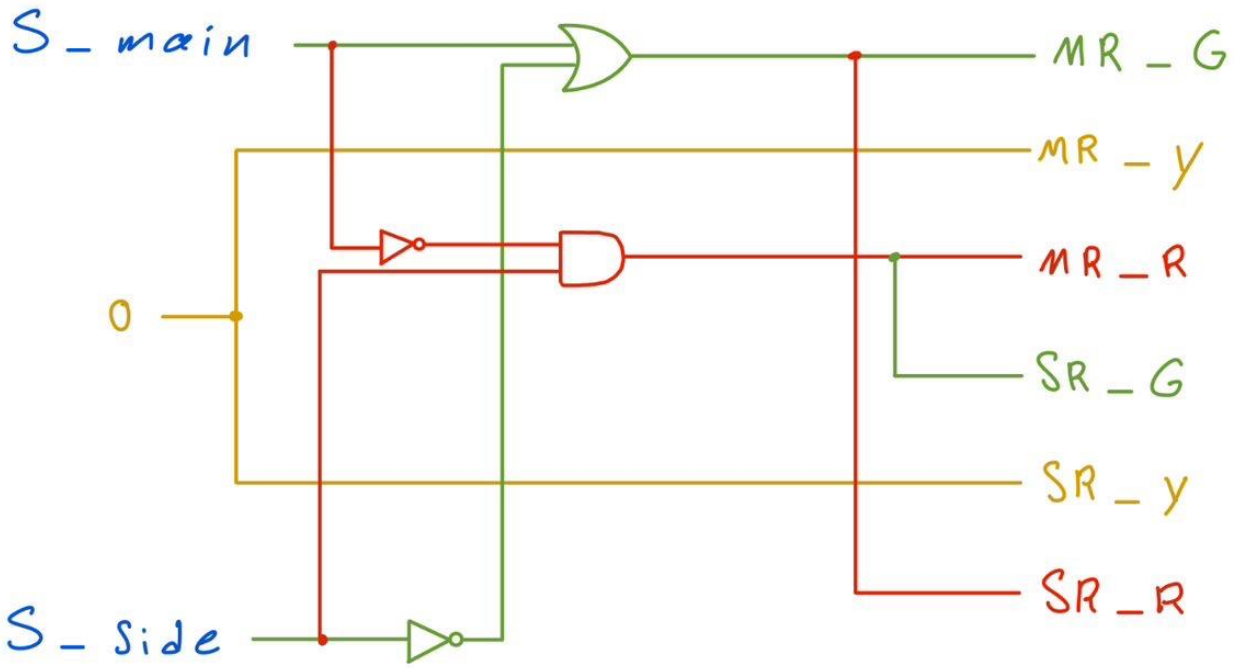

S_main = 0 , S_side =0

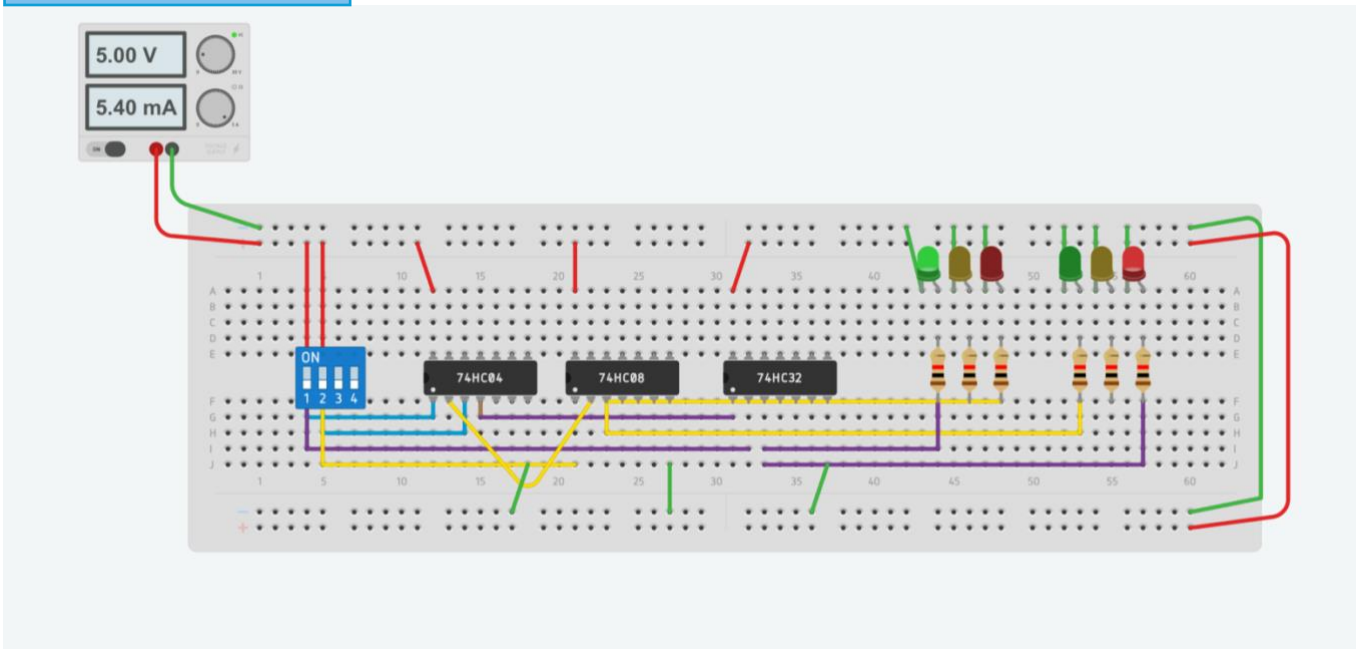

S_main = 1 S_side =0

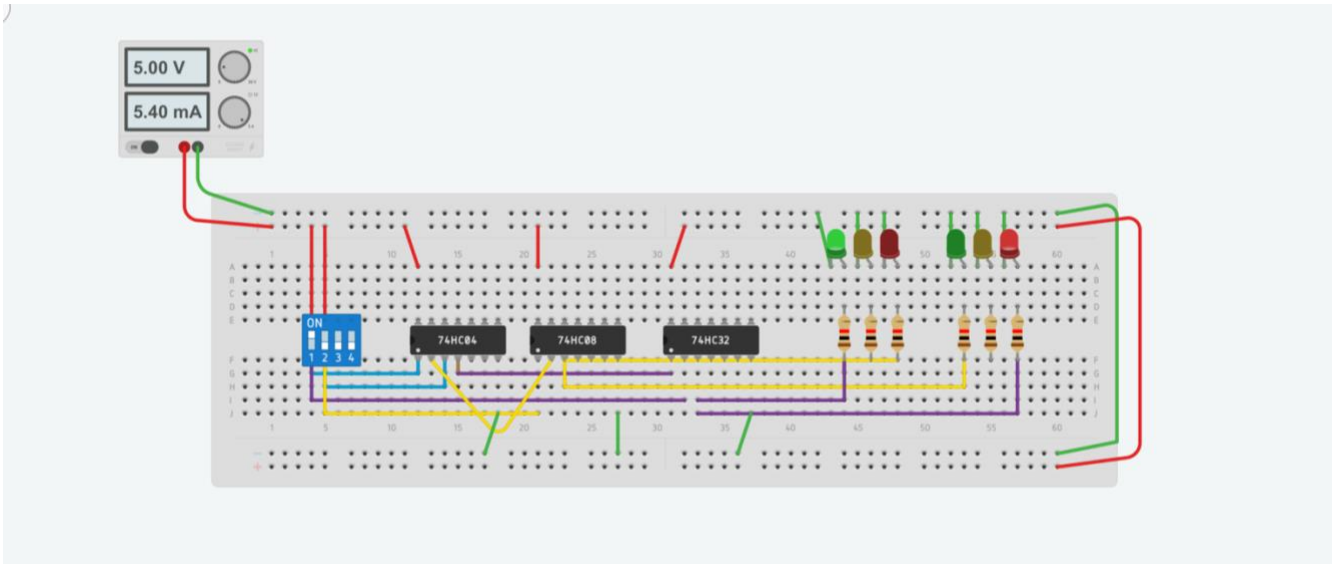

S_main = 1,S-side =1

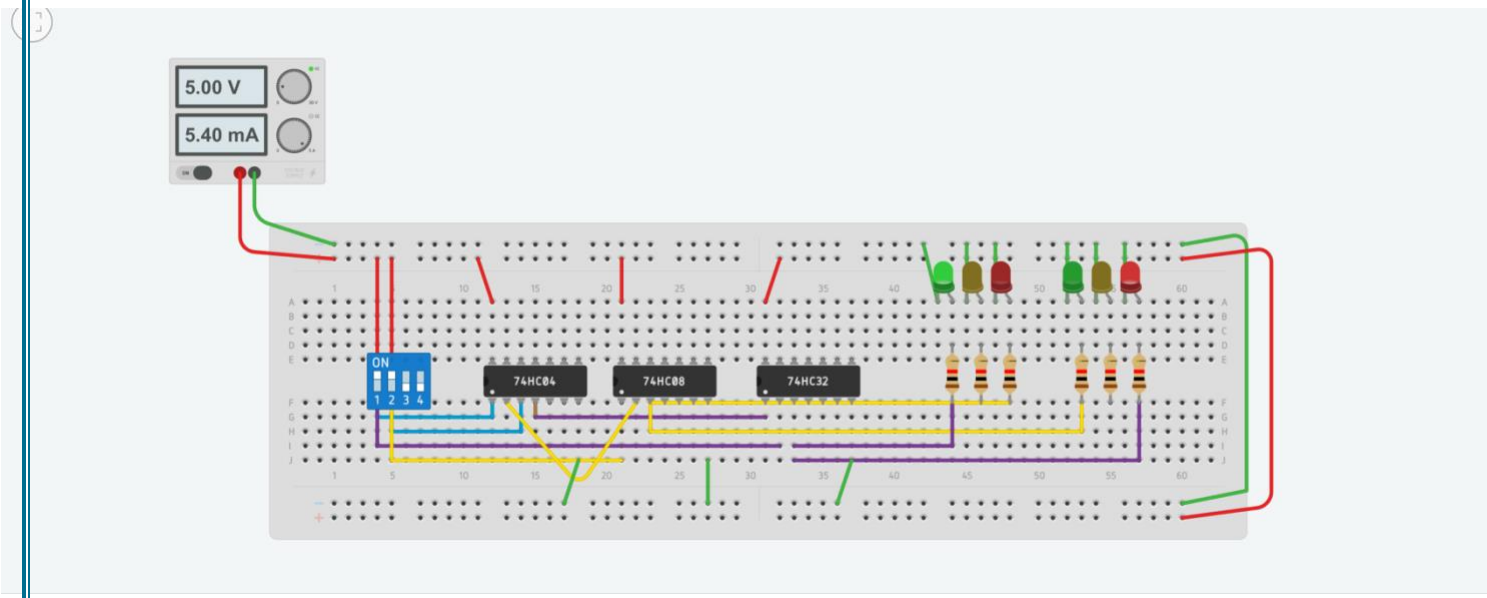

S_main = 0 , S_side =1

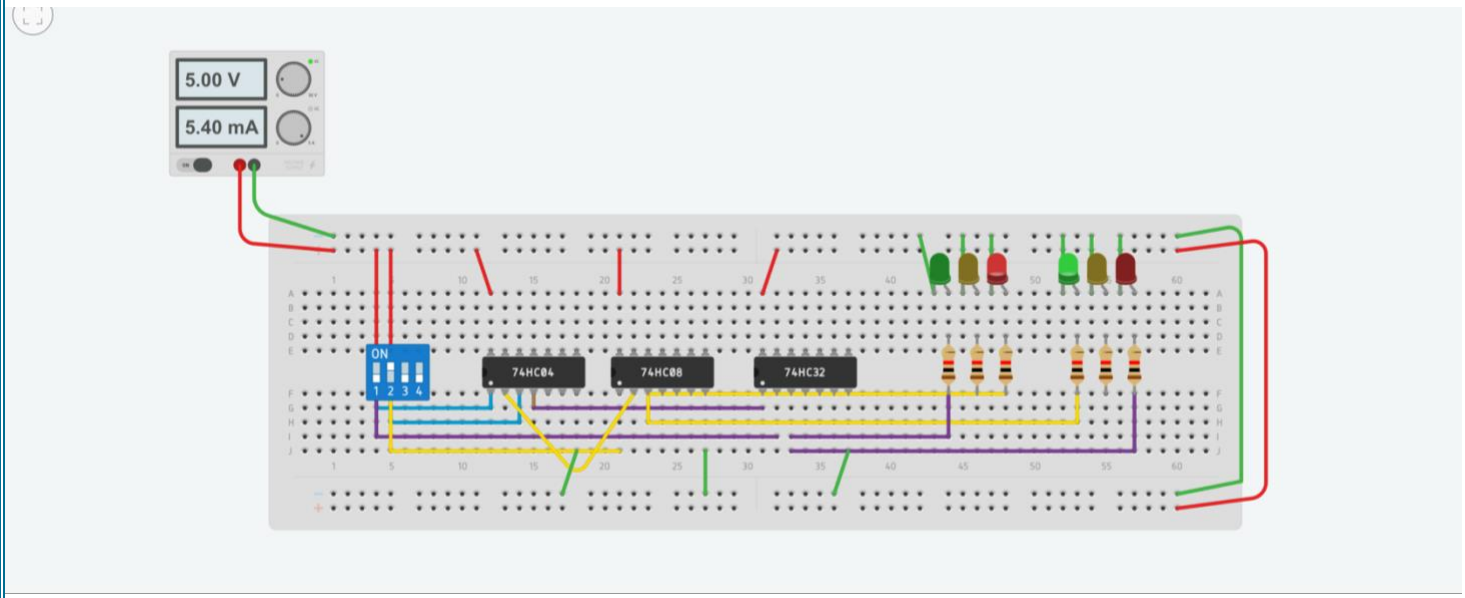

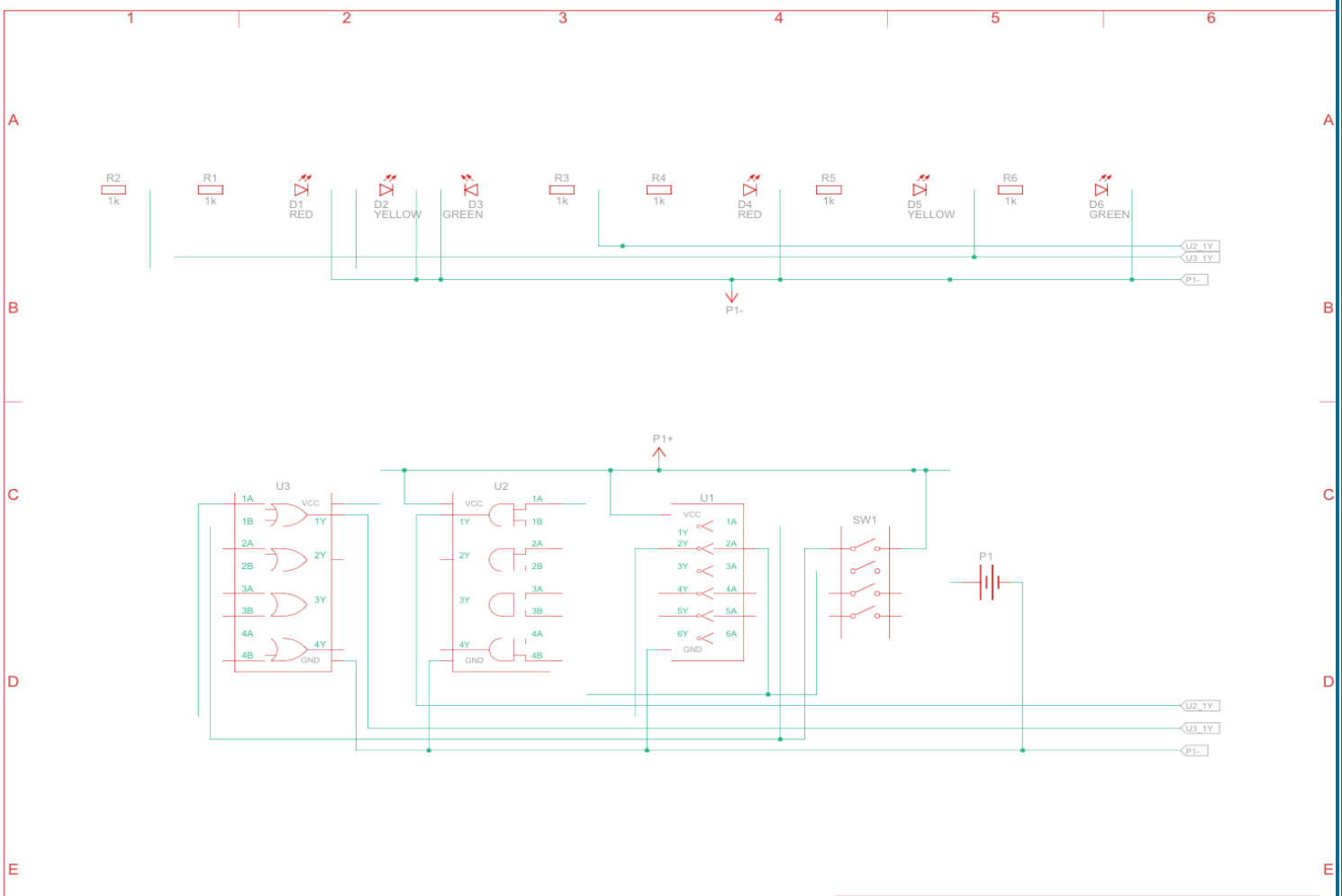

Made with Tinkercad®

Title: Project

Date: 12/14/2025, 2:11:52 AM

Sheet: 1/1