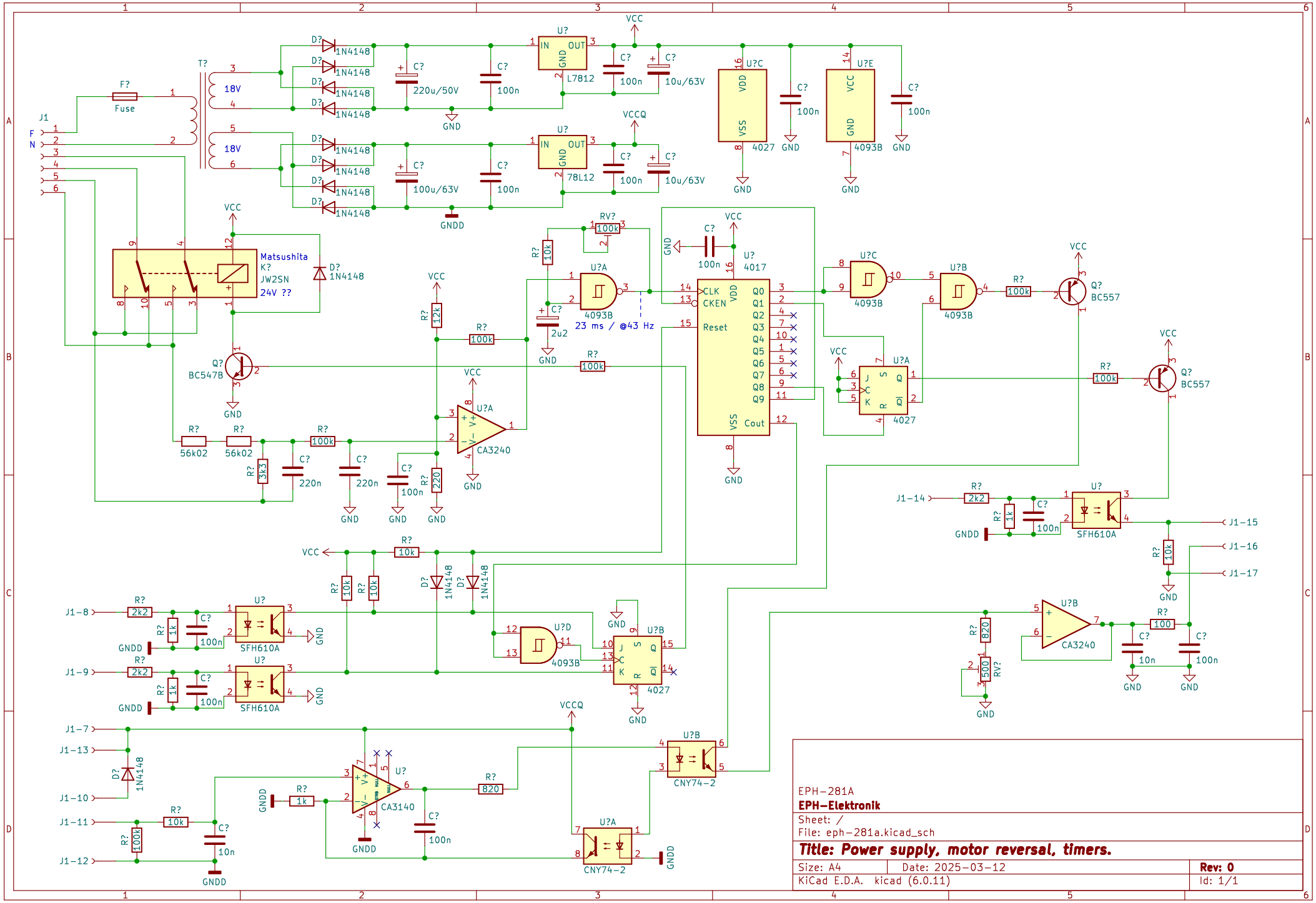
EPH-281A
EPH-Elektronik
Sheet: /
File: eph-281a.kicad_sch
Title: Power supply, motor reversal, timers.
Size: A4
Date: 2025-03-12
Rev: 0
KiCad E.D.A. kicad (6.0.11)
Id: 1/1
Matsushita
K?
JW2SN
24V ??
23 ms / @43 Hz
L7812
78L12
4017
4027
4093B
CA3240
CA3140
SFH610A
CNY74-2
BC547B
BC557
Fuse
18V
VCC
VCCQ
GND
GNDD