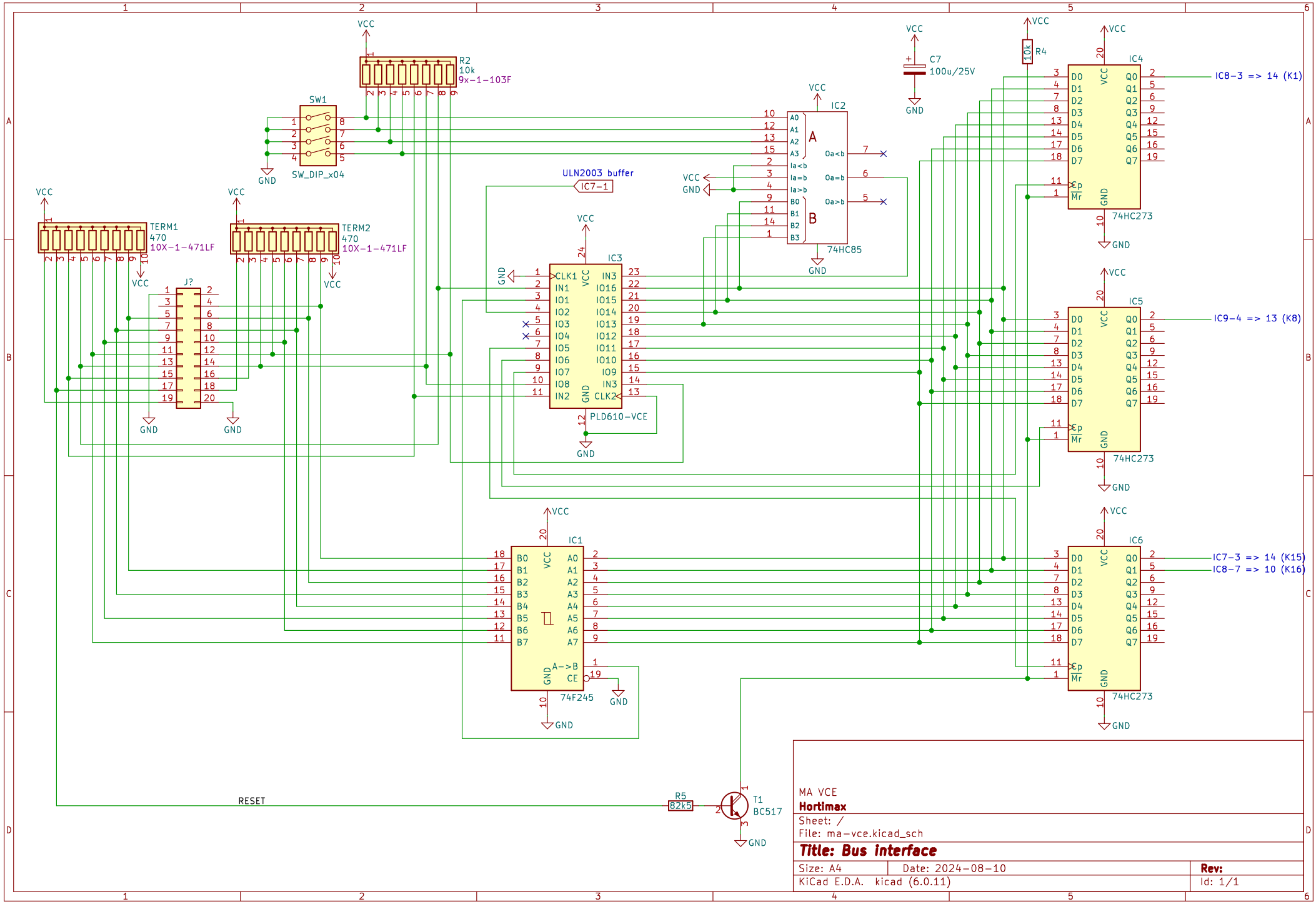

MA VCE

Hortimax

Sheet: /

File: ma-vce.kicad_sch

Title: Bus interface

Size: A4	Date: 2024-08-10	Rev:
KiCad E.D.A. kicad (6.0.11)		Id: 1/1