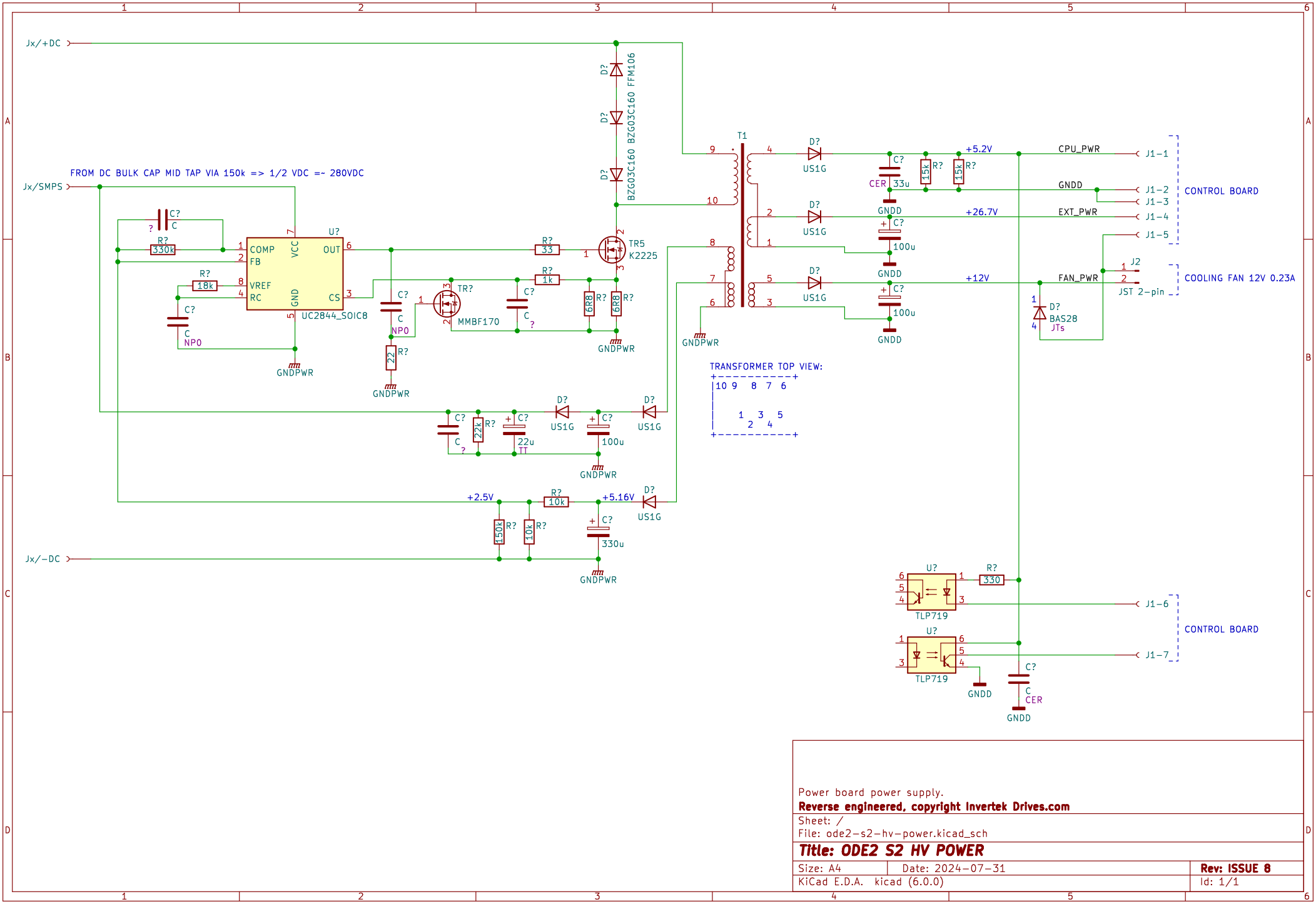

Power board power supply.

Reverse engineered, copyright Invertek Drives.com

Sheet: /

File: ode2-s2-hv-power.kicad_sch

Title: ODE2 S2 HV POWER

Size: A4	Date: 2024-07-31	**Rev: ISSUE 8**
KiCad E.D.A. kicad (6.0.0)		Id: 1/1