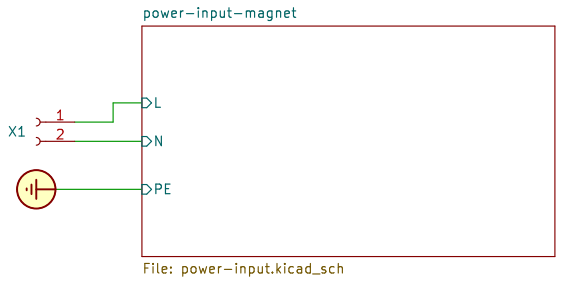

Sheet: /
File: kbu35qw.kicad_sch

Title: Fein KBU35QW

Size: A4	Date: 2026-02-16	Rev: 0
KiCad E.D.A. kicad (6.0.11)		Id: 1/2

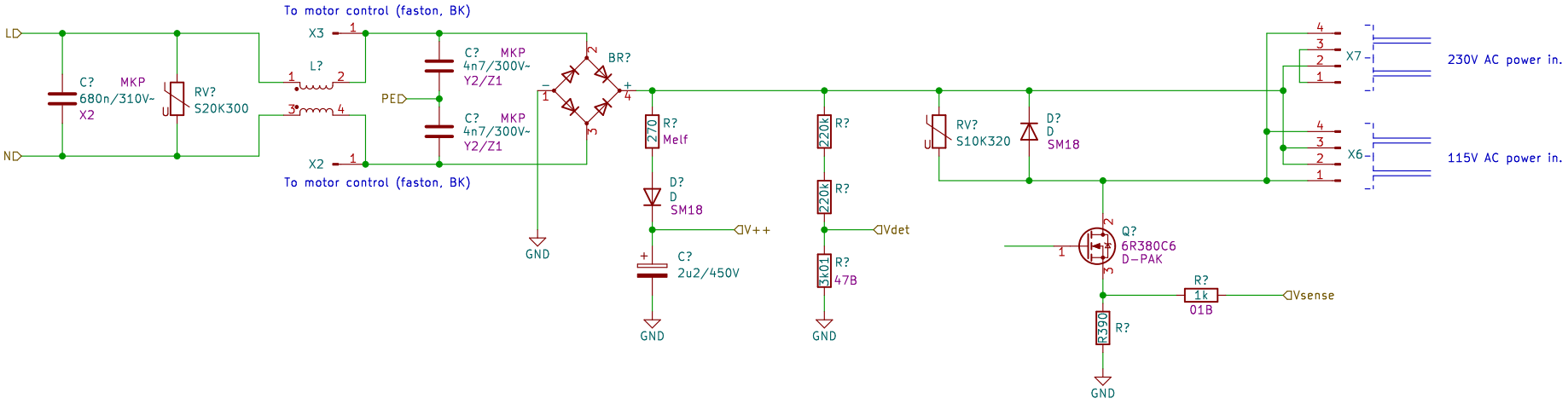

Sheet: /power-input-magnet/
File: power-input.kicad_sch

Title: Fein KBU35QW

Size: A4	Date: 2026-02-16	**Rev: 0**
KiCad E.D.A. kicad (6.0.11)		Id: 2/2