gas-arc-control

File: gas-arc-control.kicad_sch

wire-control

File: wire-control.kicad_sch

Incomplete

Rowac 420

Sheet: /
File: re419d.kicad_sch

Title: RE419 welding control board

Size: A4	Date: 2026-06-01	**Rev: D**
KiCad E.D.A. kicad (6.0.11)		Id: 1/3

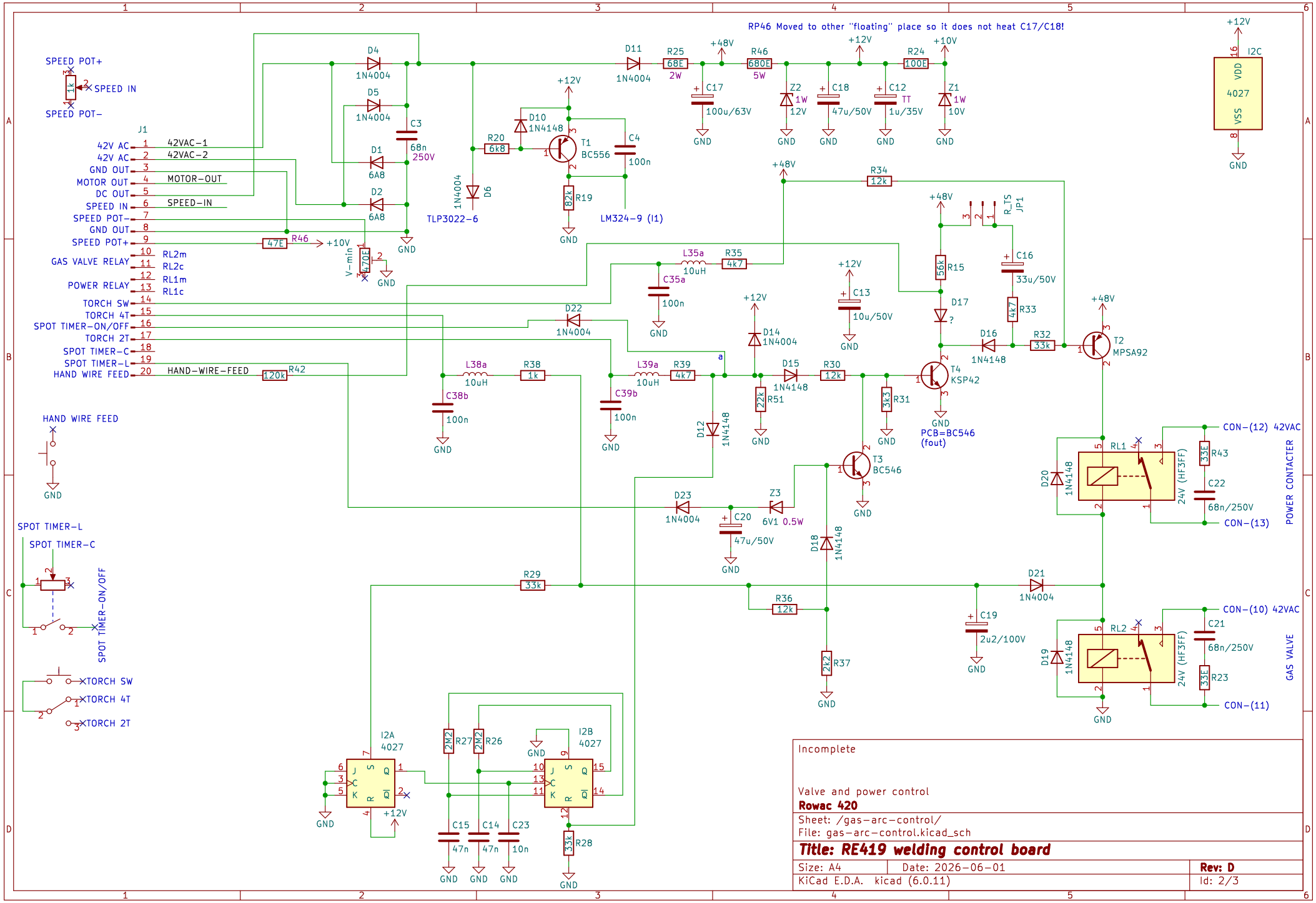

Incomplete

Valve and power control

Rowac 420

Sheet: /gas−arc−control/

File: gas−arc−control.kicad_sch

Title: RE419 welding control board

Size: A4	Date: 2026−06−01	**Rev: D**
KiCad E.D.A. kicad (6.0.11)		Id: 2/3

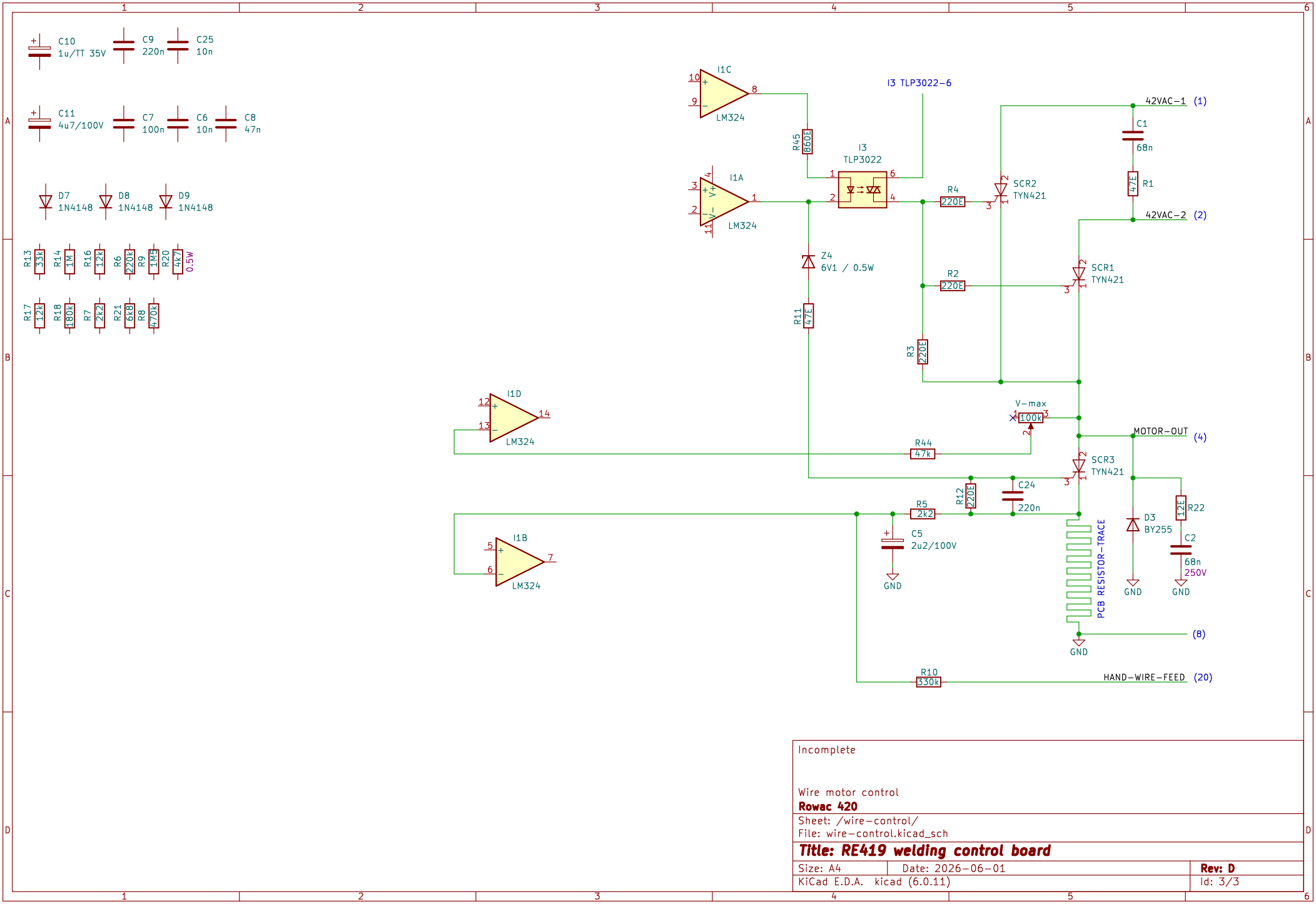

Incomplete

Wire motor control

Rowac 420

Sheet: /wire-control/

File: wire-control.kicad_sch

Title: RE419 welding control board

Size: A4	Date: 2026-06-01	**Rev: D**
KiCad E.D.A. kicad (6.0.11)		Id: 3/3