Light Minimum System

Table of Content

Page 1	Cover Page
Page 2	Block Diagram
Page 3	Power Diagram and Sequence
Page 4	CPU Power
Page 5	LPDDR4/4X-1
Page 6	LPDDR4/4X-2
Page 7	eMMC and SDIO
Page 8	CPU Video Interfaces
Page 9	CPU General Interfaces
Page 10	BOOT Switch and JTAG
Page 11	PMIC
Page 12	SODIMM
Page 13	Ethernet0
Page 14	Ethernet1
Page 15	
Page 16	
Page 17	
Page 18	
Page 19	
Page 20	
Page 21	
Page 22	
Page 23	
Page 24	
Page 25	
Page 26	

Revision History

Rev. Code	Date	By	Description
A10	2022-10-25	Gengjian Zhu	Initial version

SOM Board Block Diagram

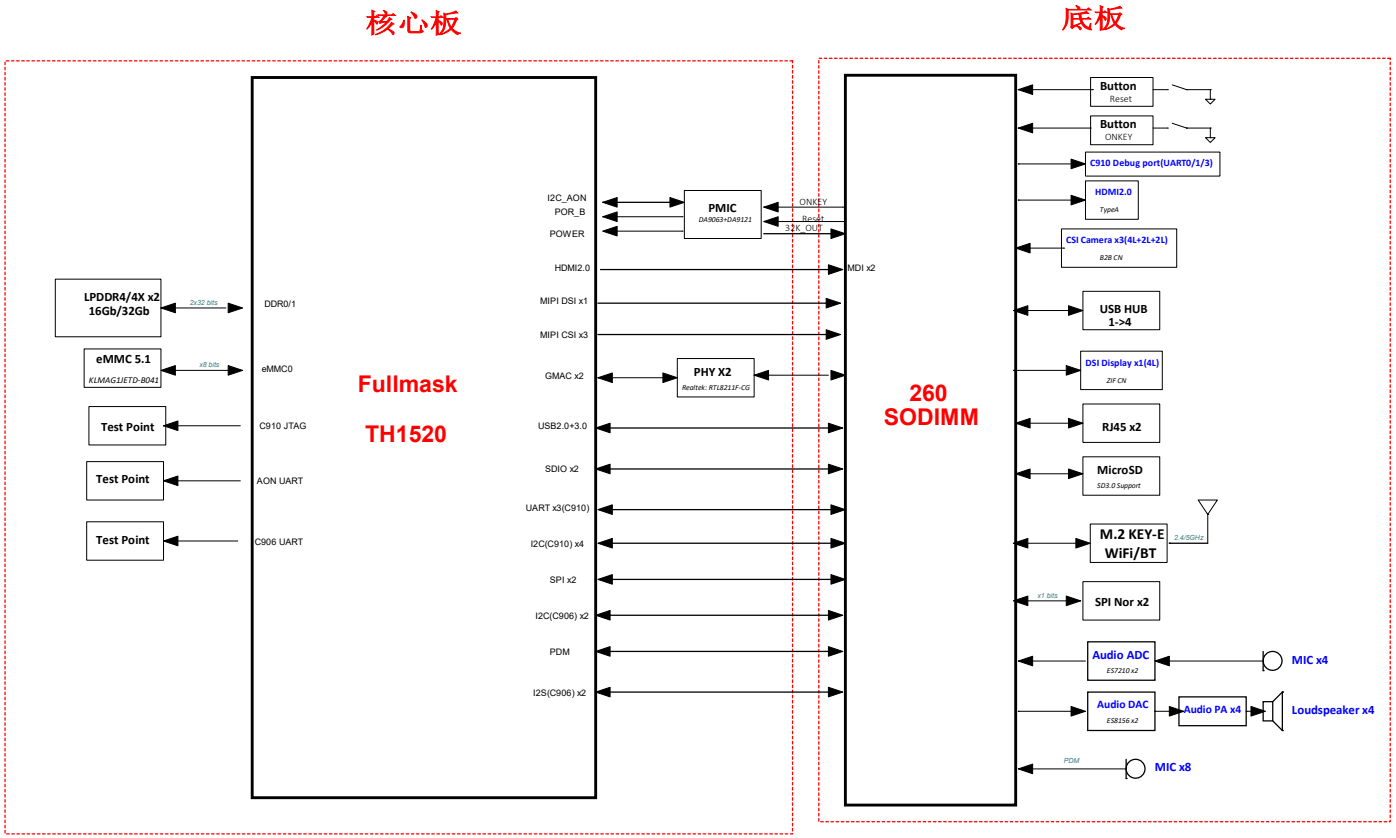

阿里巴巴 Alibaba.com		Drawn by: Liu Fei	
		Drawn Date: 2021-09-08	
The name of PCB: SOM	Size: A3	Checked by: checked by	
Title: Block Diagram	Size: A12	Checked Date: Checked date	
Date: Monday, January 30, 2012	Sheet: 1 of 10		

Power Diagram and Sequence

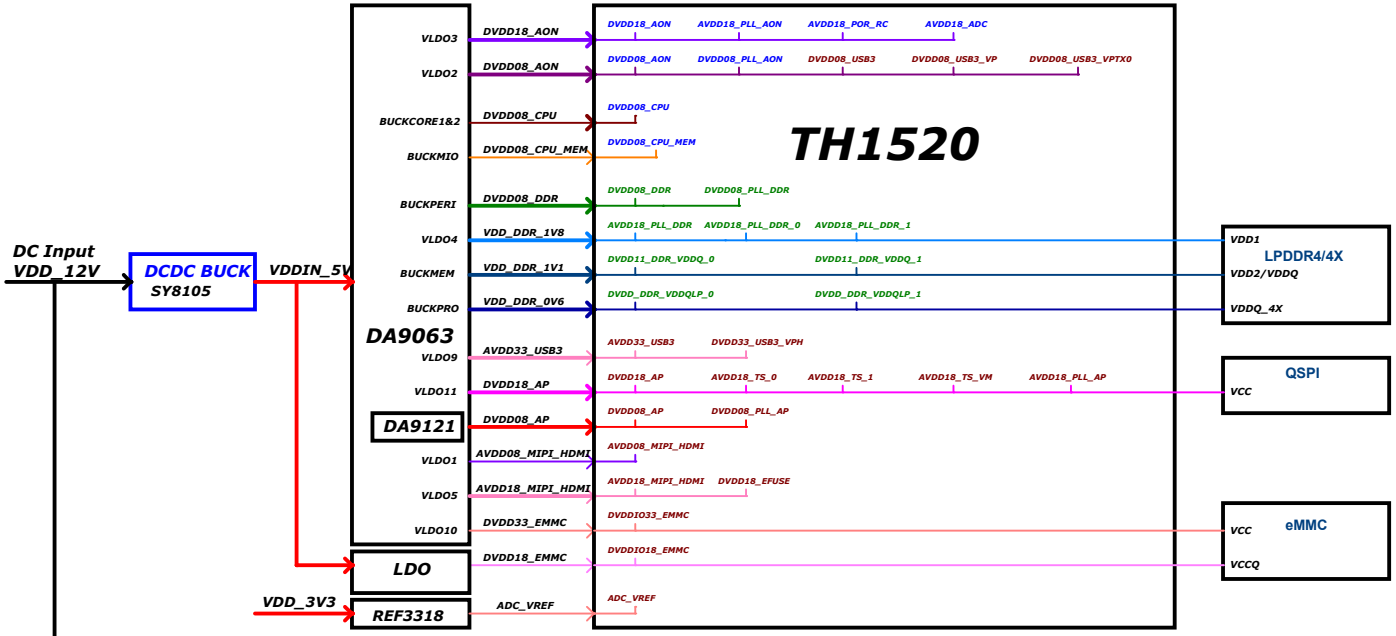

CPU Power Sequence

冷启动上电，并确认顺序执行，复位开机

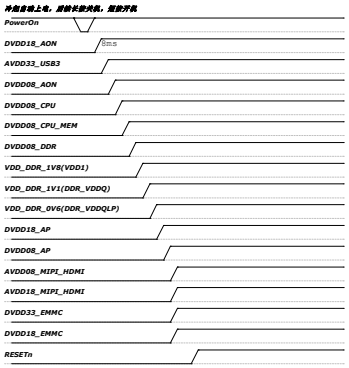

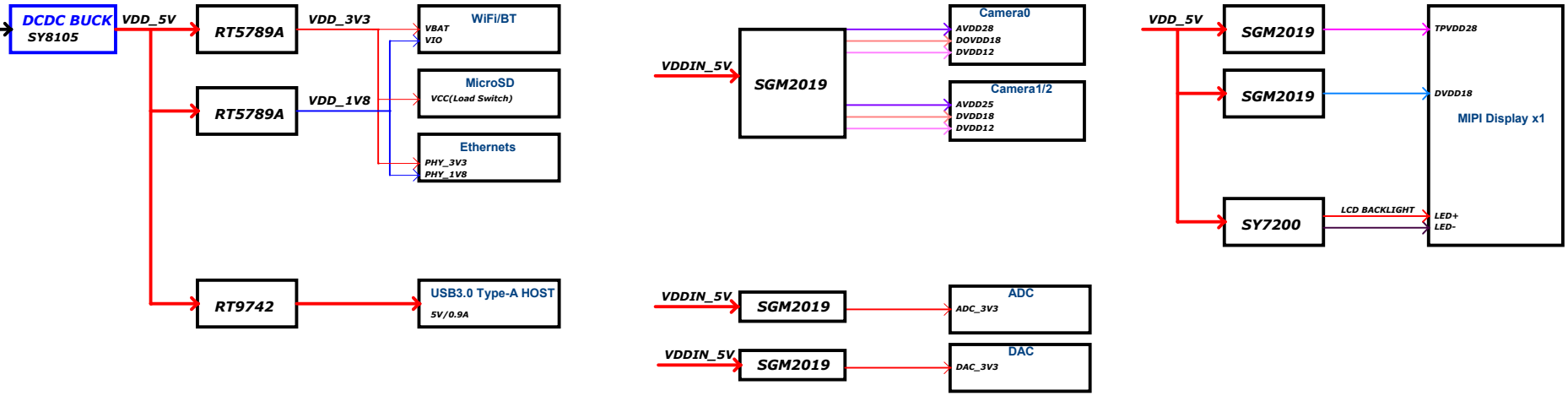

阿里巴巴 Alibaba.com		Drawn by: Liu Fei
		Drawn Date: 2021-09-09
The name of PCB: Fullmask Validation Board	Size: A3	Checked by: checked by
Title: Power Diagram and Sequence	Rev: A12	Checked Date: Checked date
Date: Monday, January 30, 2023	Sheet 3 of 30	

CPU POWER

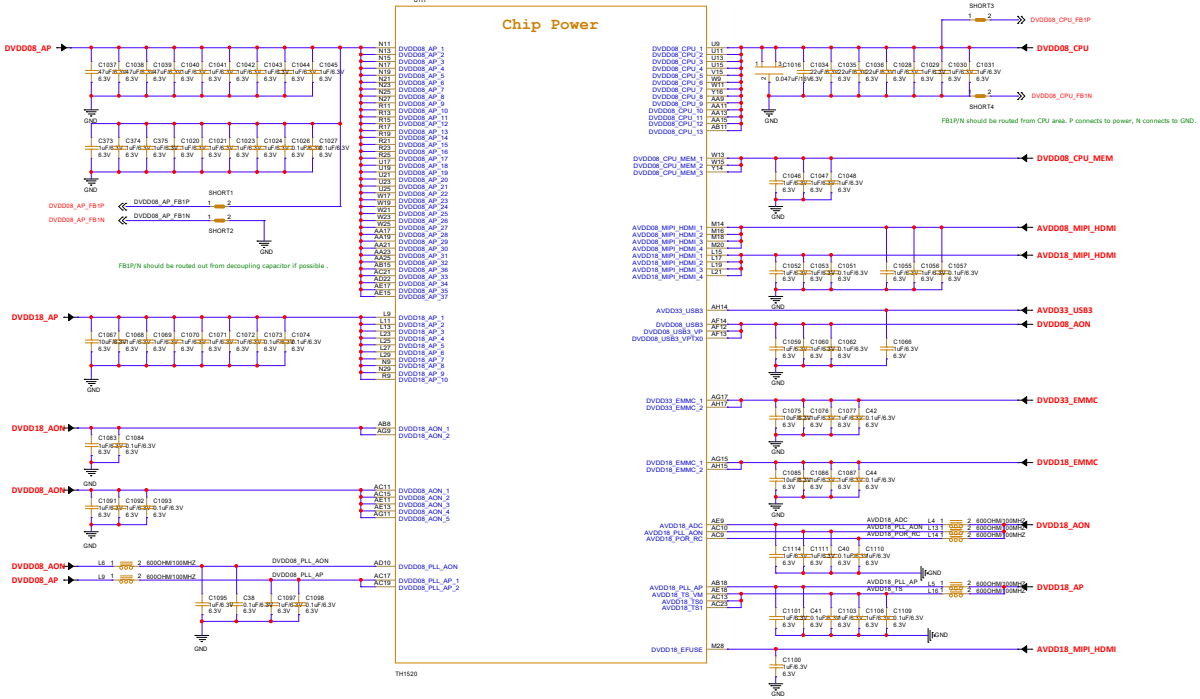

GND

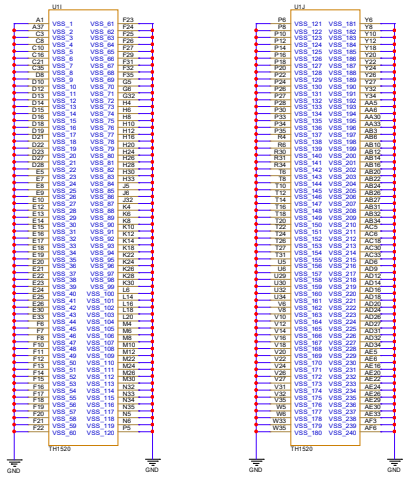

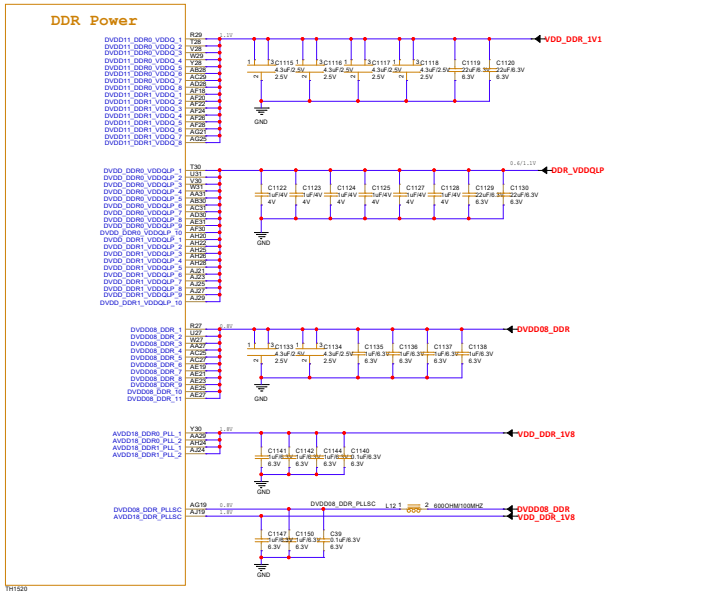

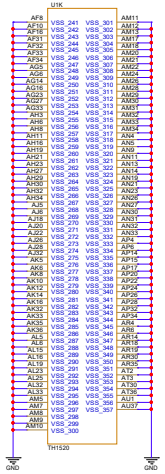

阿里巴巴 Alibaba.com			Drawn by: Liu Fei
The name of PCB: Fullmask Validation Board		Size: A3	Drawn Date: 2021-09-09
Title: Chip Power		Rev: A12	Checked by: checked by
Date: Monday, January 30, 2023		Sheet 4 of 30	Checked Date: Checked date

LPDDR4/4X-1

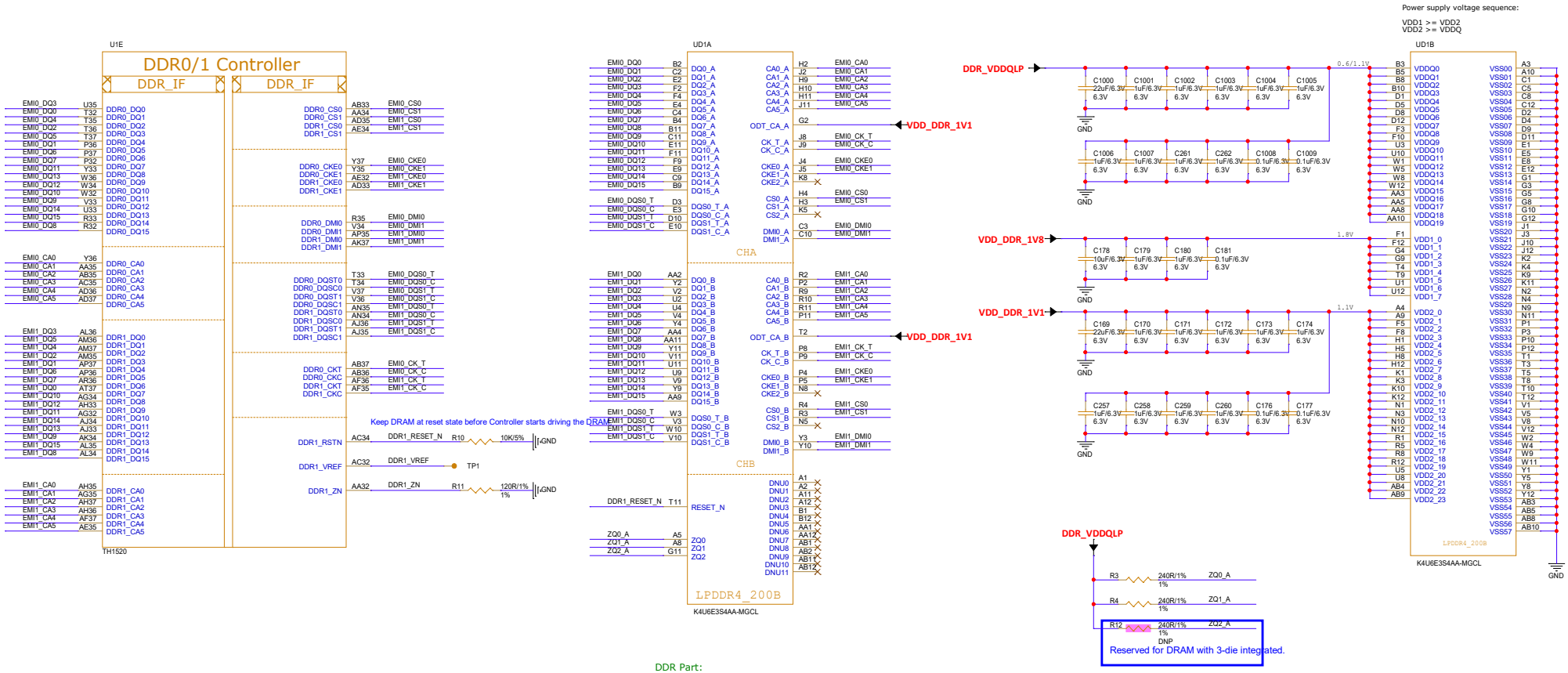

DDR Part:

K4U6E3S4AA-MGCL	Samsung	LPDDR4X	2GB
K4UBE3D4AA-MGCL	Samsung	LPDDR4X	4GB
K4FBE3D4HM-SGCL	Samsung	LPDDR4	4GB
MT53D512M32D2DS-046 WT:D	Micron	LPDDR4/4X	2GB
MT53D1024M32D4DT-046 WT:D	Micron	LPDDR4/4X	4GB

阿里巴巴 Alibaba.com		Drawn by: Liu Fei	
		Drawn Date: 2021-09-09	
The name of PCB: Fullmask Validation Board	Size: A3	Checked by: checked by	
Title: LPDDR4/4X-1	Rev.: A12	Checked Date: Checked date	
Date: Monday, January 30, 2023	Sheet 5 of 30		

LPDDR4/4X-2

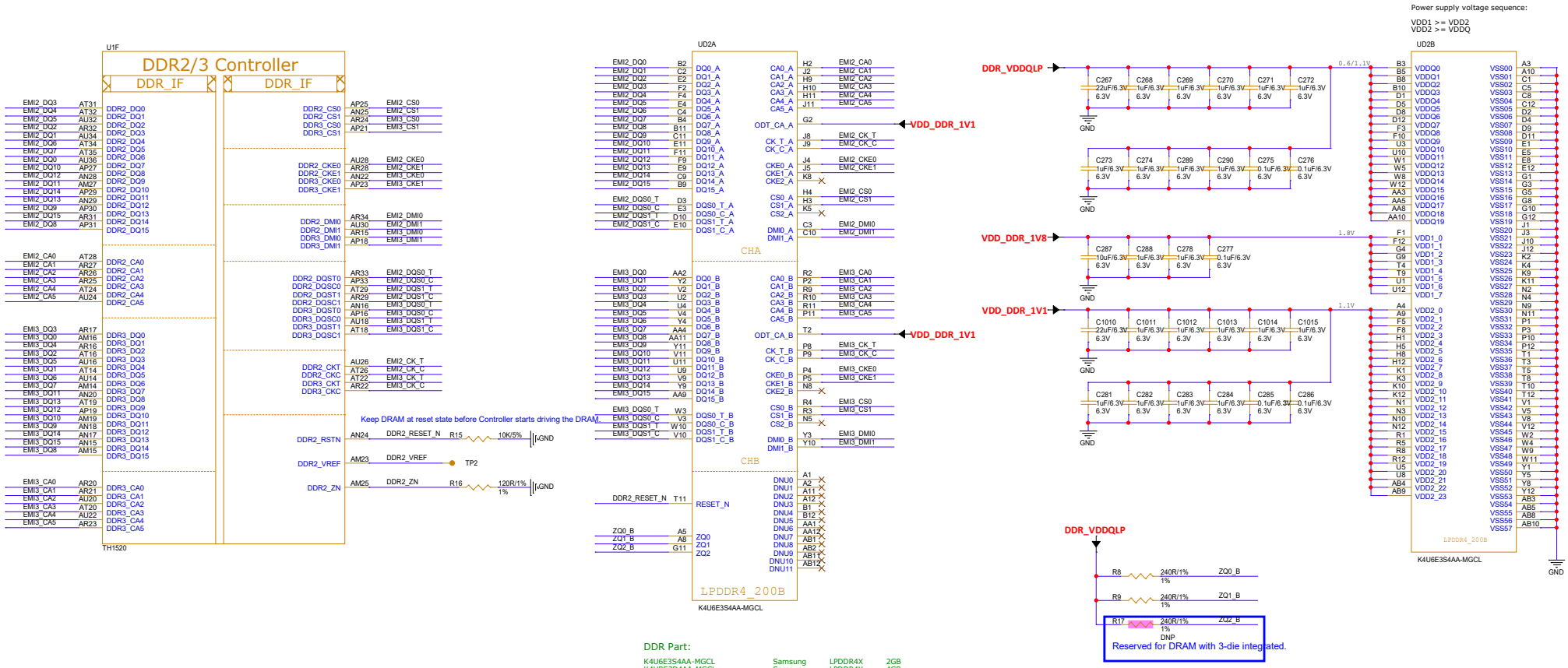

DDR Part:

K4U6E3S4AA-MGCL	Samsung	LPDDR4X	2GB
K4UBE3D4AA-MGCL	Samsung	LPDDR4X	4GB
K4FBE3D4HM-SGCL	Samsung	LPDDR4	4GB
MT53D512M32D2DS-046 WT:D	Micron	LPDDR4/4X	2GB
MT53D1024M32D4DT-046 WT:D	Micron	LPDDR4/4X	4GB

阿里巴巴 Alibaba.com		Drawn by: Liu Fei	
		Drawn Date: 2021-09-09	
The name of PCB: Fullmask Validation Board	Size: A3	Checked by: checked by	
Title: LPDDR4/4X-2	Rev.: A12	Checked Date: Checked date	
Date: Monday, January 30, 2023	Sheet 6 of 30		

eMMC

eMMC5.1

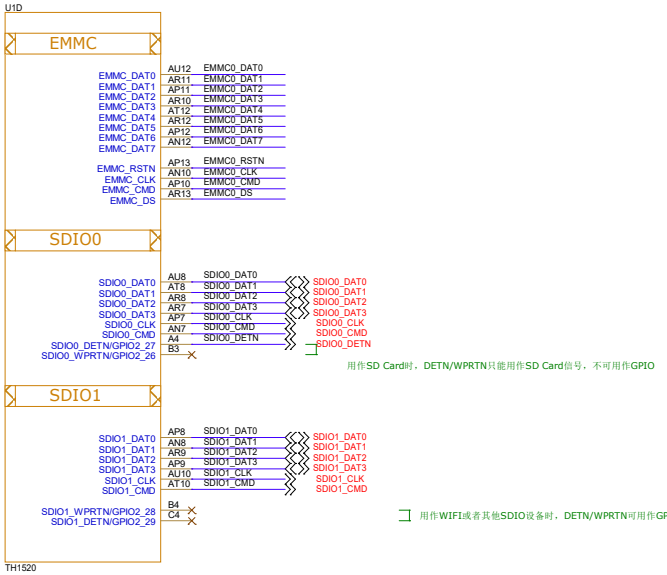

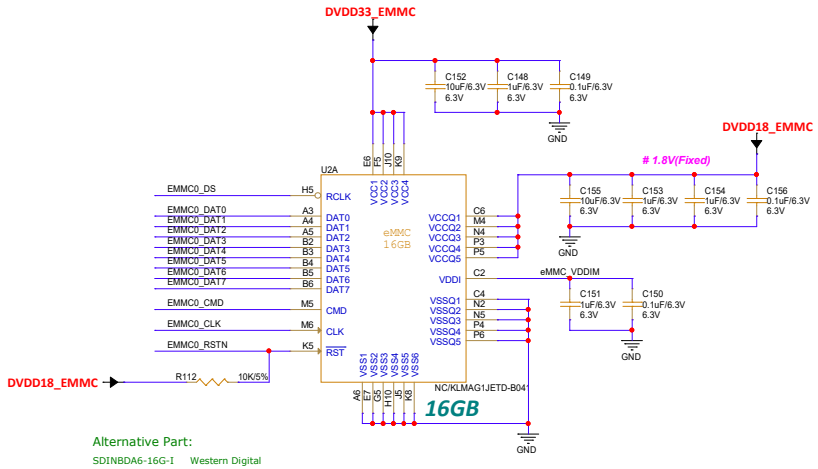

Alternative Part:

SDINBDA6-16G-I Western Digital

KLMAG1JETD-B041 Samsung 16GB

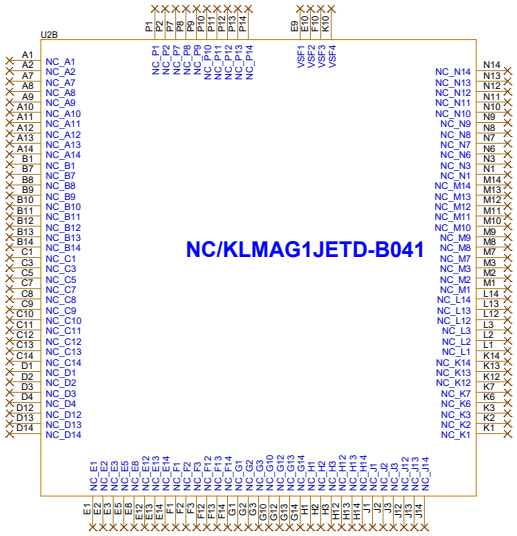

阿里巴巴 Alibaba.com		Drawn by: Liu Fei	
		Drawn Date: 2021-09-09	
The name of PCB: Fullmask Validation Board	Size: A3	Checked by: checked by	
Title: eMMC and SDIO	Rev.: A12	Checked Date: Checked date	
Date: Monday, January 30, 2023	Sheet 7 of 30		

CPU Video Interface

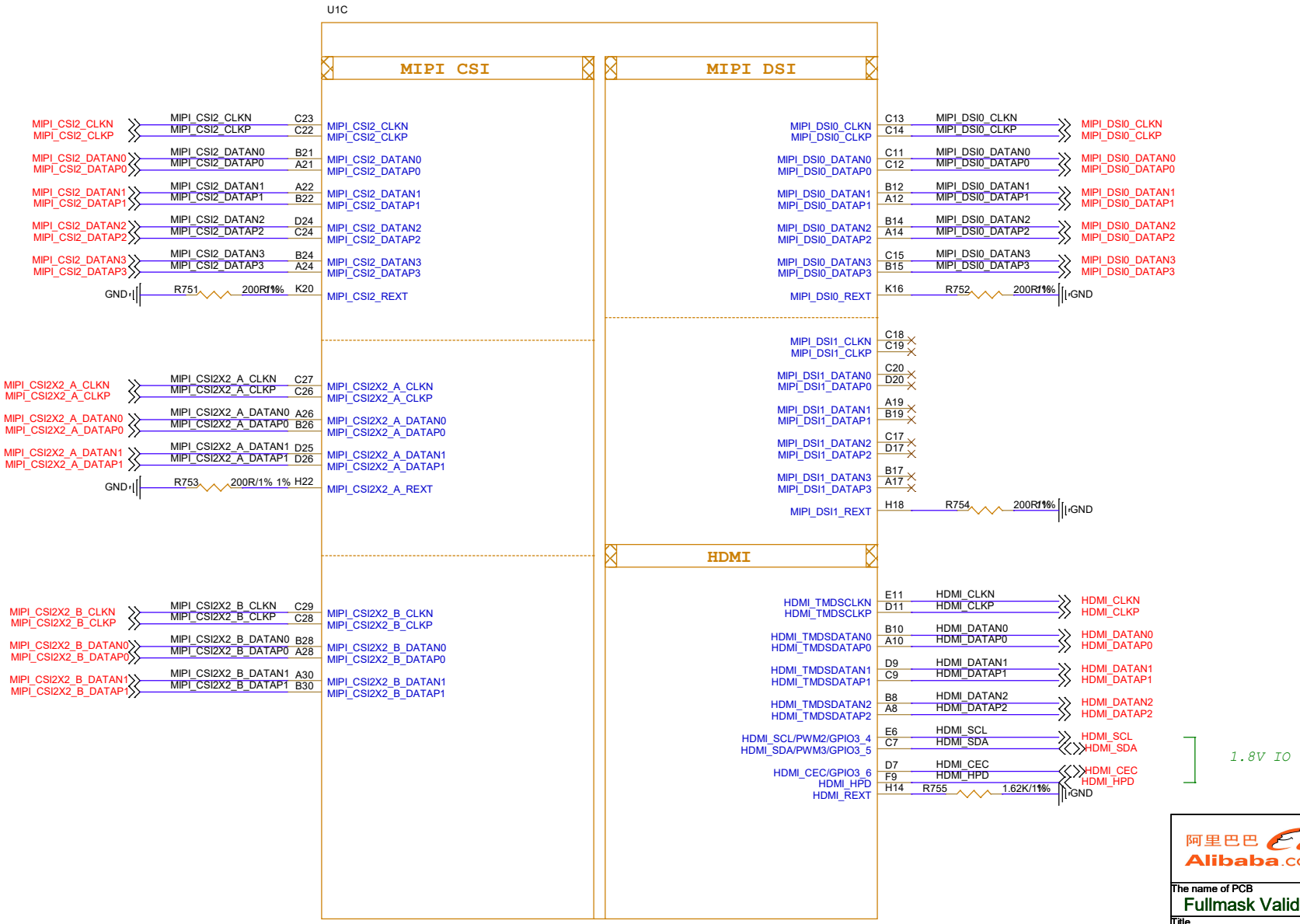

阿里巴巴 Alibaba.com		Drawn by: Liu Fei
		Drawn Date: 2021-09-09
The name of PCB: Fullmask Validation Board	Size: A3	Checked by: checked by
Title: CPU Video Interface	Rev.: A12	Checked Date: Checked date
Date: Monday, January 30, 2023	Sheet 8 of 30	

CPU General Interfaces

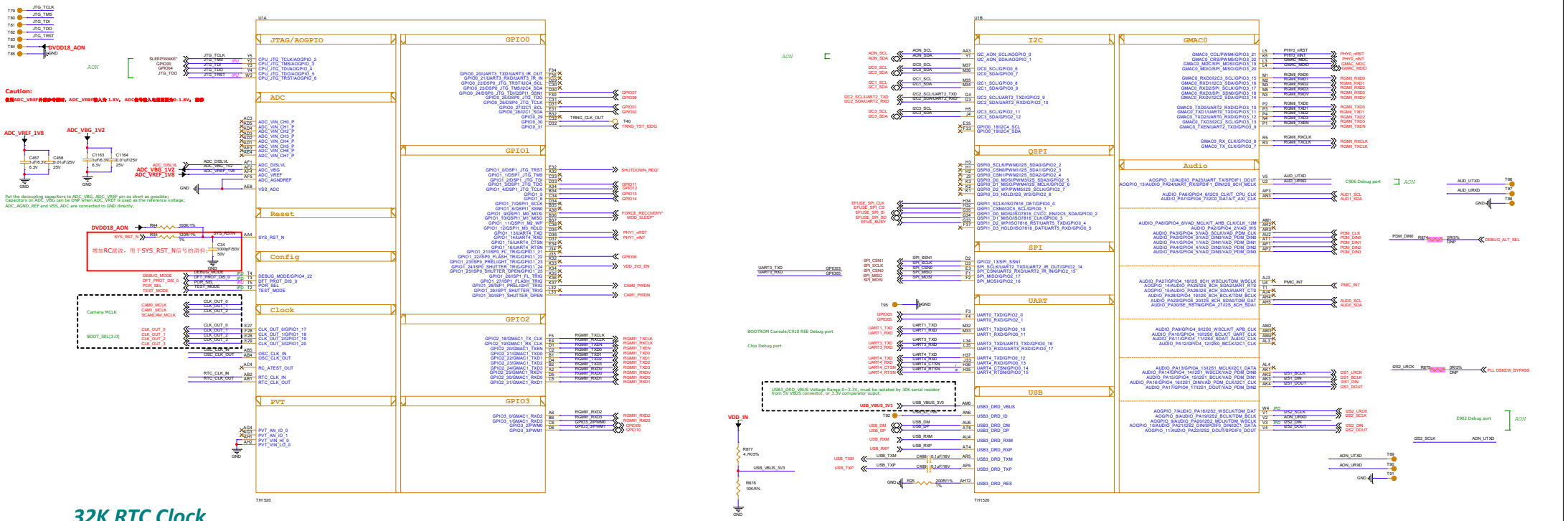

32K RTC Clock

24M Clock

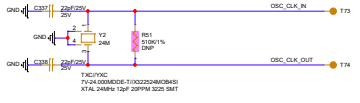

ADC Reference

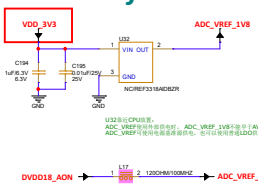

I2C Address Table:

I2C Port	Interface	Device	I2C Address
AON_I2C	PMIC	DA9063	0x5A(1011010x)
		DA9121	0x68(1101000x)
		SLG51000	0x75(1110101x)
	RTC	PCF8563	0x51(1010001x)
AUD_I2C0	ADC0-3	ES7210	0x40(1000000x)
		ES7210	0x41(1000001x)
		ES7210	0x42(1000010x)
		ES7210	0x43(1000011x)
	DAC0	ES8156	0x08(0001000x)
	PA1	AW87519	0x58(1011000x)
	PA2	AW87519	0x5B(1011011x)
AUD_I2C1	IO EXP	PCAL6408AHK	0x20(0100000x)
	ADC4	ES7210	0x40(1000000x)
	DAC1	ES8156	0x08(0001000x)
	PA3	AW87519	0x58(1011000x)
	PA4	AW87519	0x5B(1011011x)
I2C0	FRAM	MB85RC1MT	0x50(1010000x)
	TOUCH0	GT911	0x5D(1011101x) 0x14(0010100x)
	LCD BIAS0	SGM3804	0x3E(0111110x)
I2C1	FRAM	MB85RC1MT	0x50(1010000x)
	TOUCH1	GT911	0x5D(1011101x) 0x14(0010100x)
	LCD BIAS1	SGM3804	0x3E(0111110x)
I2C2	FRAM	MB85RC1MT	0x50(1010000x)
	CSI2X2A	SC132G5	0x6E(1101110x)
		OV13371	0x6C(1101100x)
I2C3	FRAM	MB85RC1MT	0x50(1010000x)
	CSI2	OV12870	0x20(0100000x)
		SSK4H7	0x20(0100000x)
		OV5693	0x6C(1101100x)
I2C4	FRAM	MB85RC1MT	0x50(1010000x)
	CSI2X2B	GC5035	0x6E(1101110x)
	USB	PTN5150A	0x3A(0111010x)
	IO EXP	PCAL6408AHK	0x20(0100000x)

AUDIO PAD 分配情况:

Port	Option1 (Default)	Option1 Device	Option2	Option2 Device
TDM	√	ES7210	√	ES7210
VAD_PDM	√	ES7210	√	ES7210
I2S0	√	HT4344	√	HT4344
I2S1	√	HT4344	√	HT4344
I2S2	×	×	√	ES7210/BT 二选一
SPDIF0	√	Connector	×	×
SPDIF1	×	×	√	Connector
AUD_I2C0	√	ES7210,AW87519	√	ES7210,AW87519
AUD_I2C1	√	ES7210,AW87519	√	ES7210,AW87519
AOUART	√	Connector	×	×
AUDUART	√	Connector	×	×

IO PU/PD:

Parameter	Min	Typ	Max
RSPU(Strong)	1.6K	2.1K	3K
RPU	32K	48K	79K
RPD	30K	44K	65K

阿里巴巴 Alibaba.com		Drawn by: Liu Fei	
		Drawn Date: 2021-09-09	
The name of PCB: Fullmask Validation Board		Size: A3	Checked by: checked by
File: CPU General Interfaces		Rev: A12	Checked Date: Checked date
Date: Tuesday, January 31, 2023		Sheet 9 of 30	

BOOT Switch and JTAG Debug

Boot Switch

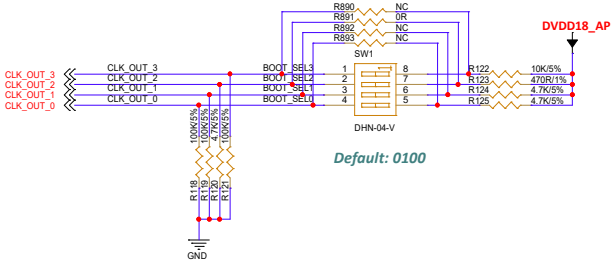

Default: 0100

Debug Switch

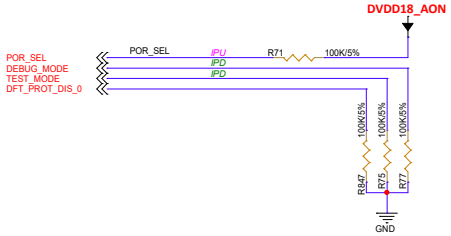

Boot Mode Setting

BOOT_SEL3 SW1 [1]	BOOT_SEL2 SW1 [2]	BOOT_SEL1 SW1 [3]	BOOT_SEL0 SW1 [4]	Boot Mode Setting SW1 [1-4]
X	0	X	X	USB Download
X	***1***	***0***	***0***	***eMMC Boot***
X	1	0	1	SD Boot, SDIO0
X	1	1	0	SPI NAND boot, QSPI0, CS0
X	1	1	1	SPI NOR Boot, QSPI0, CS0

Debug Setting Table

Signal	Setting	Description
POR_SEL	0	低电平，选择内部POR
	1	*默认高电平，选择外部POR*
DEBUG_MODE	***0***	*默认低电平，正常工作模式*
	1	高电平，使能芯片调试模式
TEST_MODE	***0***	*默认低电平，正常工作模式*
	1	高电平，使能芯片测试模式

Misc Switch

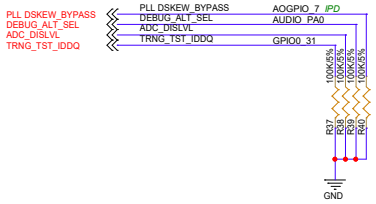

Pad	Signal	Setting	Description
AOGPIO_7	PLL DSKEW_BYPASS	***0***	*默认低电平，使能PLL校准电路*
		1	高电平，PLL 校准电路进入Bypass Mode
AUDIO_PA0	DEBUG_ALT_SEL	***0***	*默认低电平，正常工作模式*
		1	Debug mode下，作为DEBUG_ALT_SEL 功能
ADC_DISLVL	ADC_DISLVL	***0***	*默认低电平，正常工作模式*
		1	DVDD18_AON有电，DVDD08_AON无电的情况下需要拉高
GPIO0_31	TRNG_TST_IDDQ	***0***	*默认低电平，正常工作模式*
		1	Debug Mode下，作为TRNG_TST_IDDQ功能

阿里巴巴 Alibaba.com		Drawn by: Liu Fei
		Drawn Date: 2021-09-09
The name of PCB: Fullmask Validation Board	Size: A3	Checked by: checked by
Title: Boot and Debug	Rev.: A12	Checked Date: Checked date
Date: Tuesday, January 31, 2023	Sheet 11 of 30	

GMAC Ethernet0

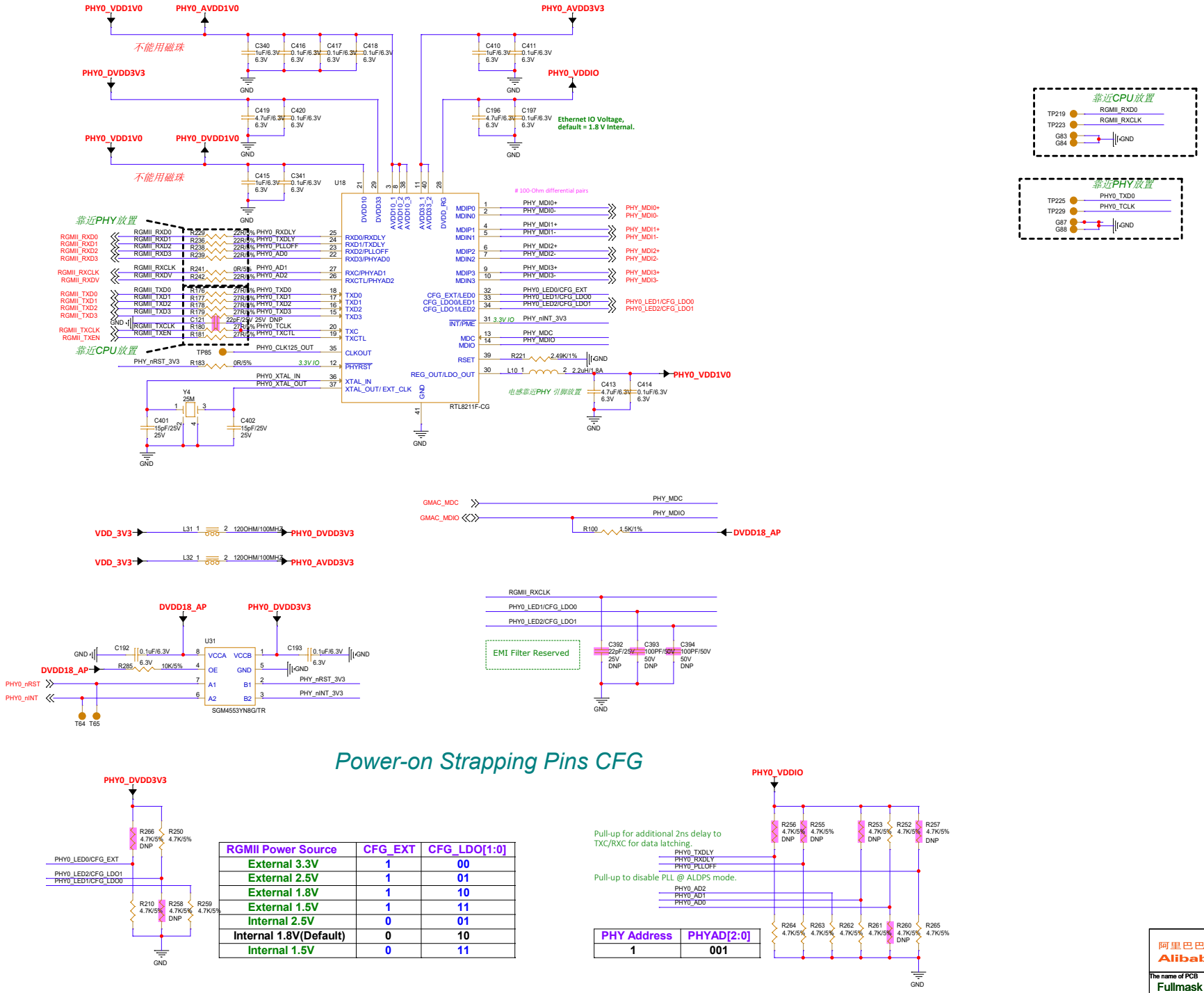

Power-on Strapping Pins CFG

RGMII Power Source	CFG_EXT	CFG_LDO[1:0]
External 3.3V	1	00
External 2.5V	1	01
External 1.8V	1	10
External 1.5V	1	11
Internal 2.5V	0	01
Internal 1.8V(Default)	0	10
Internal 1.5V	0	11

PHY Address	PHYAD[2:0]
1	001

阿里巴巴 Alibaba.com		Drawn by: Liu Fei
		Drawn Date: 2021-09-09
The name of PCB: Fullmask Validation Board	Size: A3	Checked by: checked by
Title: Ethernet0	Rev.: A12	Checked Date: Checked date
Date: Monday, January 30, 2023	Sheet 13 of 30	

GMAC Ethernet1

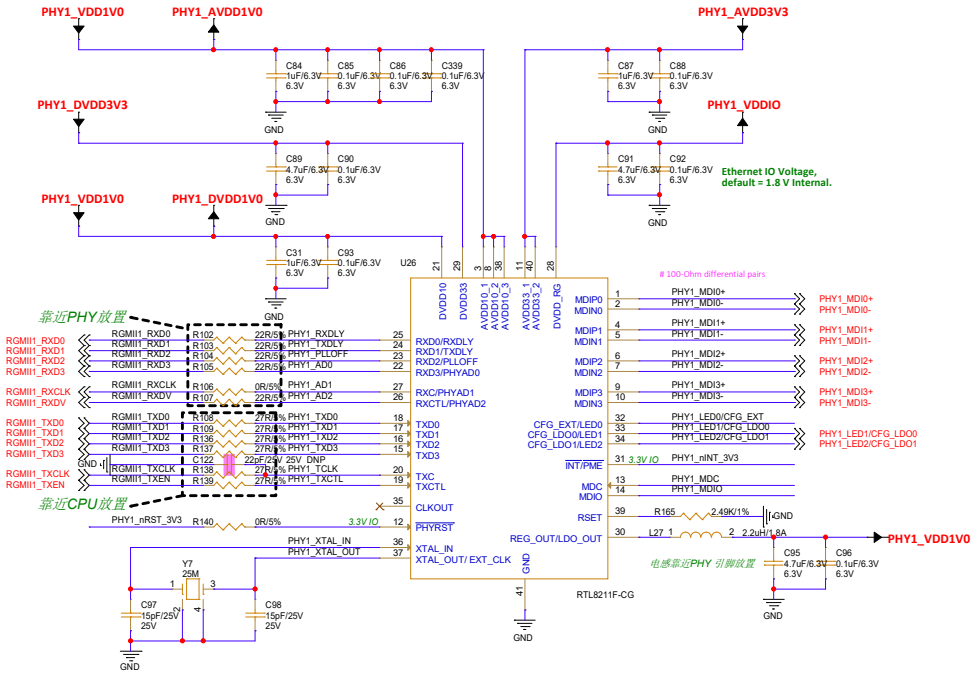

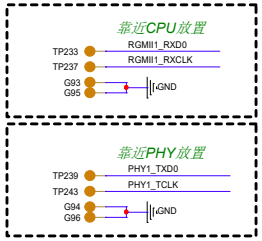

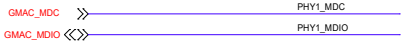

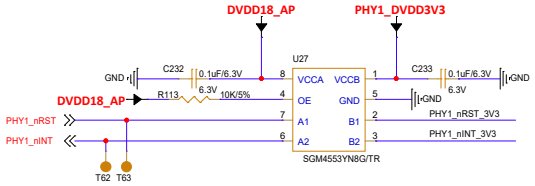

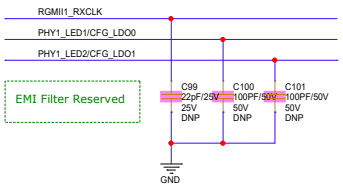

Power-on Strapping Pins CFG

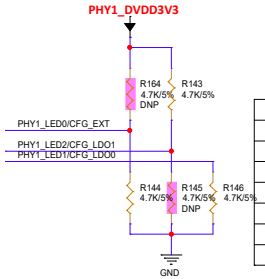

RGMII Power Source	CFG_EXT	CFG_LDO[1:0]
External 3.3V	1	00
External 2.5V	1	01
External 1.8V	1	10
External 1.5V	1	11
Internal 2.5V	0	01
Internal 1.8V(Default)	0	10
Internal 1.5V	0	11

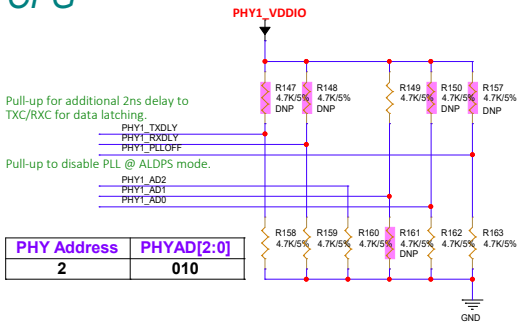

PHY Address	PHYAD[2:0]
2	010

阿里巴巴 Alibaba.com		Drawn by: Liu Fei
		Drawn Date: 2021-09-09
The name of PCB: Fullmask Validation Board	Size: A3	Checked by: checked by
Title: Ethernet1	Rev.: A12	Checked Date: Checked date
Date: Monday, January 30, 2023	Sheet 14 of 30	

PMIC

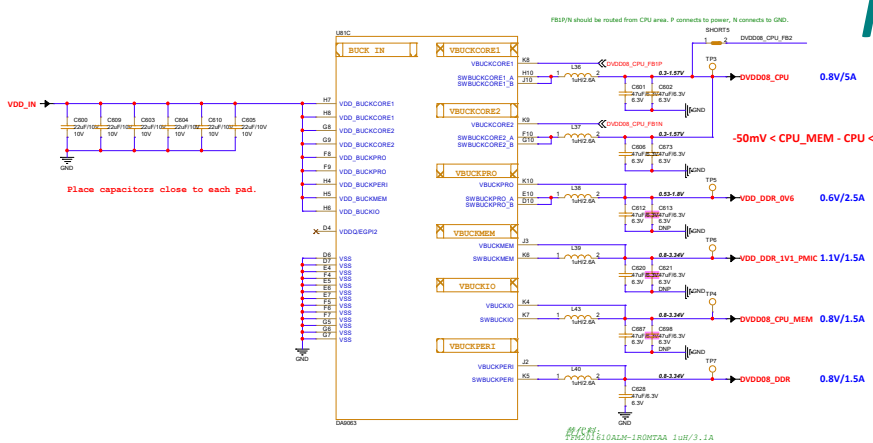

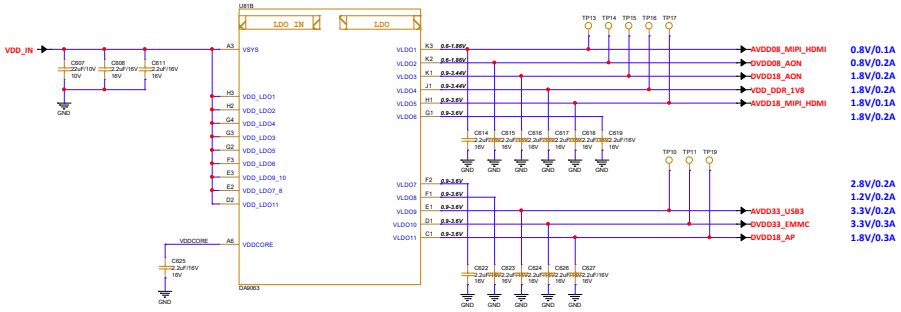

DVDD08_AP

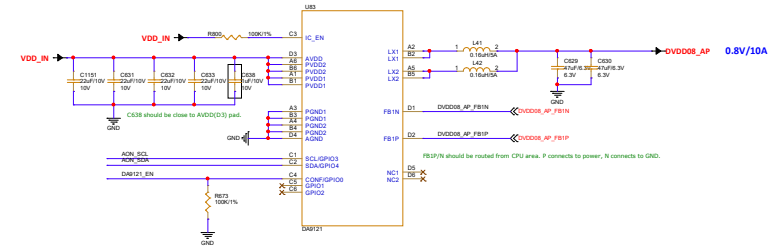

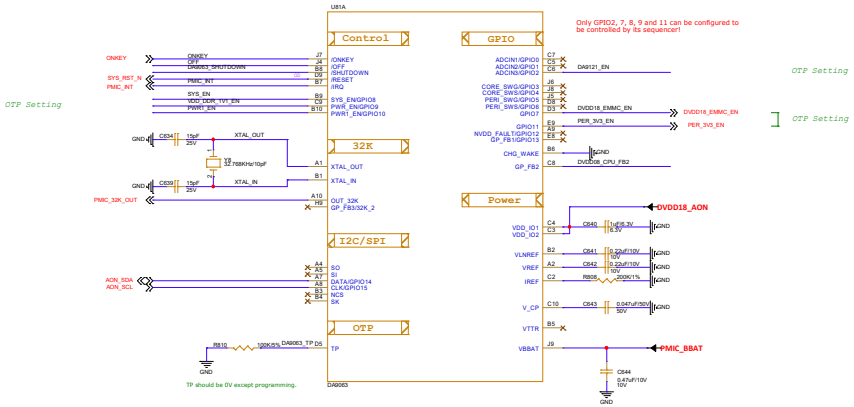

1.1V For 64bit LPDDR4

LPDDR4/4X VDDQ Power Supply:

LPDDR4X VDDQ:0.6V, R13/R881 0OHM, R14 /R882/R887DNP Default

LPDDR4 VDDQ:1.1V, R14 /R882/R8870OHM, R13/R881 DNP

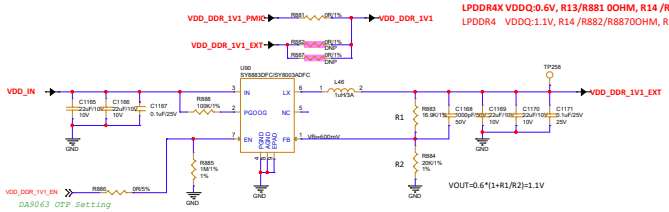

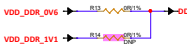

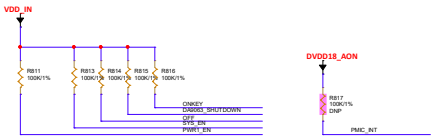

3.3V For Peripherals

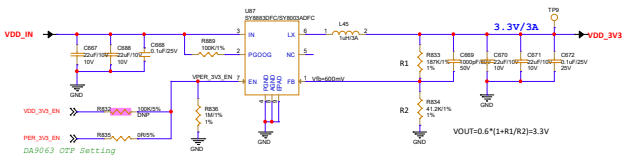

1.8V For EMMC

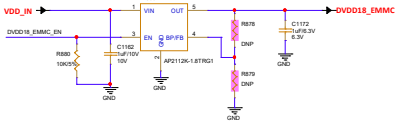

PMIC Output Setting and Sequence

Time Slot	PMIC Channel	Supply Limit	Power Supply Name	Default Voltage	Work Status	Standby Status
1	VLDO3	0.2A	DVDD18_AON	1.8V	ON	ON
2	VLDO9	0.2A	AVDD33_USB3	3.3V	ON	ON
3	VLDO2	0.2A	DVDD08_AON	0.8V	ON	ON
4	BUCKCORE1+2	5A	DVDD08_CPU	0.8V	ON	OFF
5	BUCKMIO	1.5A	DVDD08_CPU_MEM	0.8V	ON	OFF
6	BUCKPERI	1.5A	DVDD08_DDR	0.8V	ON	OFF
7	VLDO4	0.2A	VDD_DDR_1V8(VDD1)	1.8V	ON	ON
8	BUCKMEM	1.5A	VDD_DDR_1V1(DDR_VDDQ)	1.1V	ON	ON
9	BUCKPRO	2.5A	VDD_DDR_0V6(DDR_VDDQLP)	0.6V	ON	ON
10	VLDO11	0.3A	DVDD18_AP	1.8V	ON	ON/OFF
12	DA9121_EX	10A	DVDD08_AP	0.8V	ON	OFF
13	VLDO1	0.1A	AVDD08_MIPI_HDMI	0.8V	ON	OFF
13	VLDO5	0.1A	AVDD18_MIPI_HDMI	1.8V	ON	ON/OFF
13	VLDO10	0.3A	DVDD33_EMMC	3.3V	ON	ON
13	LDO_EX	0.4A	DVDD18_EMMC	1.8V	ON	ON
15	RESET_n	-	SYS_RST_N	-	-	-
NC	VLDO6	0.2A	DOVDD18_SCAN	1.8V	ON/OFF	ON/OFF
NC	VLDO7	0.2A	VEXT_2V8	2.8V	ON/OFF	ON/OFF
NC	VLDO8	0.2A	DVDD12_SCAN	1.2V	ON/OFF	ON/OFF

DA9063 IO Setting and Sequence

Time Slot	PMIC Signal	Net Name	Power Supply Name	Default Voltage	Work Status	Standby Status
8	GPIO9	VDD_DDR_1V1_EN	VDD_DDR_1V1	1.1V	ON	ON
10	GPIO11	PER_3V3_EN	VDD_3V3/VDD_1V8	3.3/1.8V	ON	ON/OFF
12	GPIO2	DA9121_EX	DVDD08_AP	0.8V	ON	OFF
13	GPIO7	DVDD18_EMMC_EN	DVDD18_EMMC	1.8V	ON	ON
NC	GPIO3	PER_PWR_EN2 (Optional)	VDD_3V3/VDD_1V9	3.3/1.8V	ON	ON/OFF
NC	GPIO4	AVDD28_SCAN_EN	AVDD28_SCAN	2.8V	ON/OFF	ON/OFF

CPU Power Sequence

冷启动上电，最长长软关机，最短开机

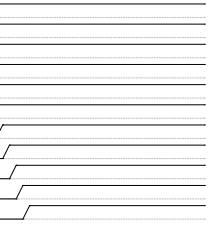

阿里巴巴 Alibaba.com		Drawn by: Liu Fei	Drawn Date: 2021-09-09
The name of PCB: Fullmask Validation Board		Size: A3	Checked by: checked by
File: PMIC		Rev: A12	Checked Date: Checked date
Date: Wednesday, March 01, 2023		Sheet 24 of 30	

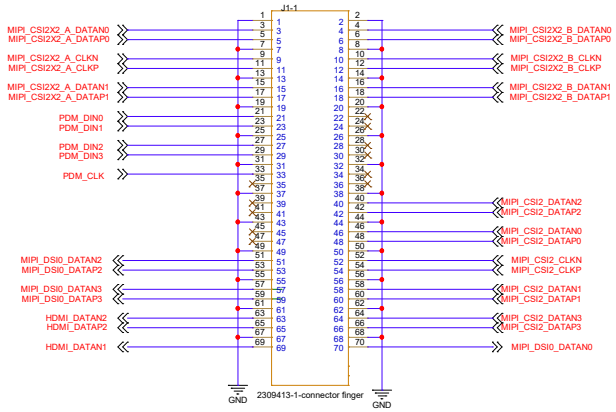

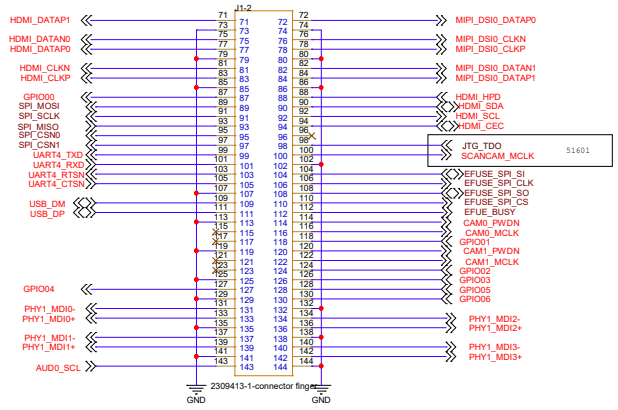

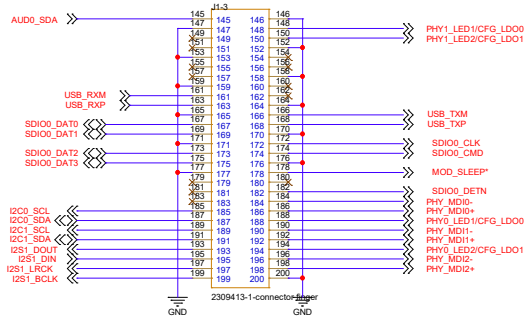

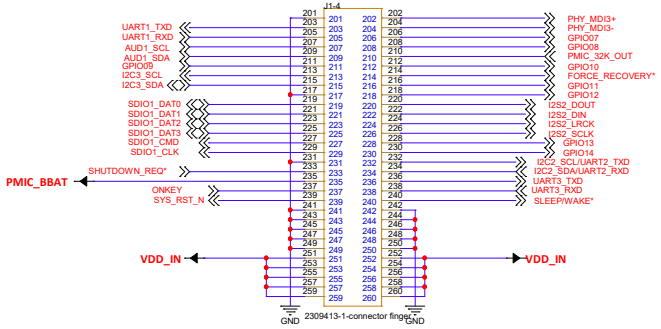

阿里巴巴 Alibaba.com		Drawn by: Liu Fei	
		Drawn Date: 2021-09-09	
The name of PCB: Fullmask Validation Board	Size: A3	Checked by: checked by	
Title: PMIC	Rev.: A12	Checked Date: Checked date	
Date: Tuesday, January 31, 2023	Sheet 24 of 30		