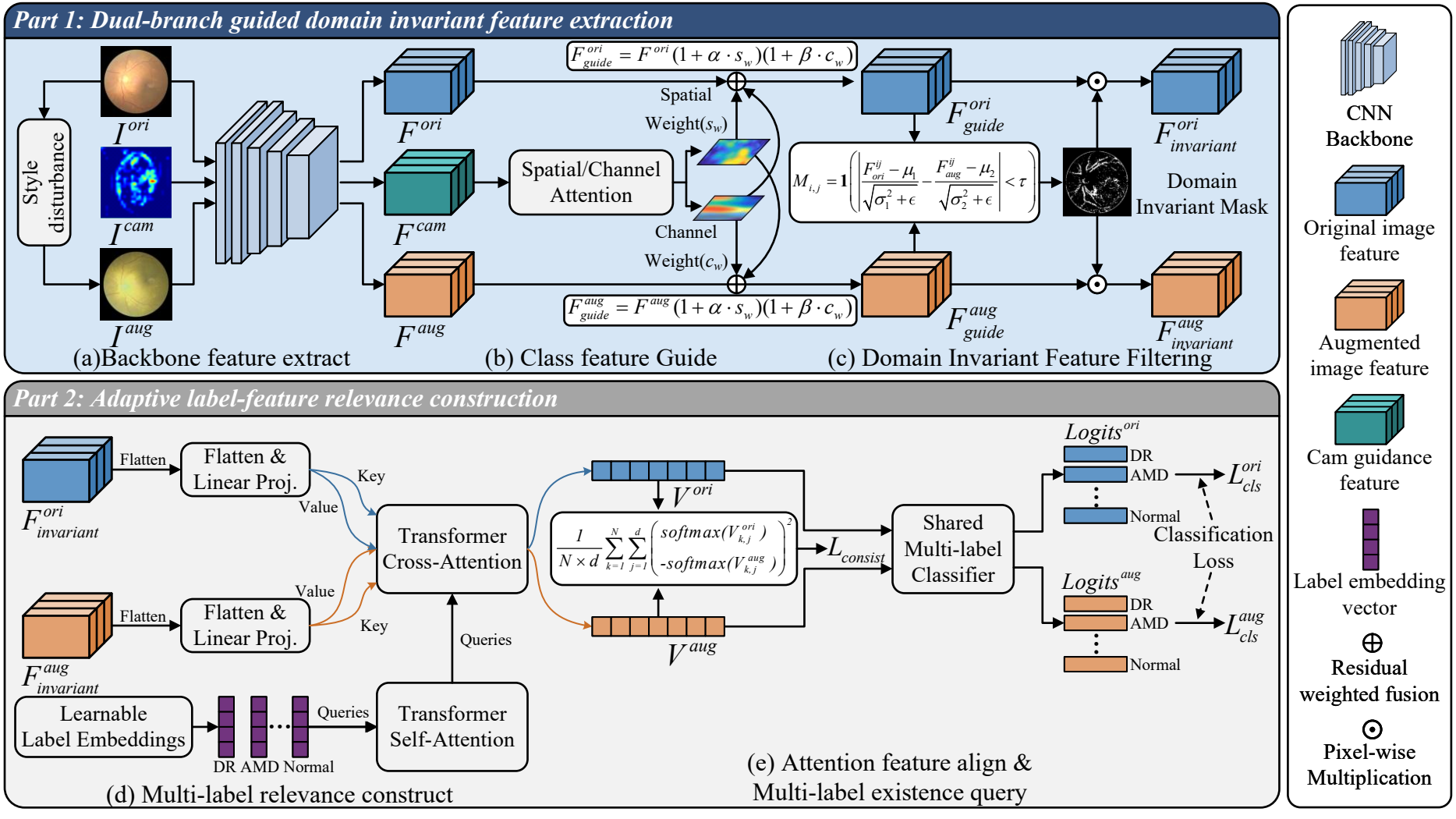
Part 1: Dual-branch guided domain invariant feature extraction
Style disturbance
I^{ori}
I^{cam}
I^{aug}
F^{ori}
F^{cam}
F^{aug}
Spatial/Channel Attention
Spatial Weight(s_w)
Channel Weight(c_w)
$F^{ori}_{guide} = F^{ori}(1+\alpha \cdot s_w)(1+\beta \cdot c_w)$
$F^{aug}_{guide} = F^{aug}(1+\alpha \cdot s_w)(1+\beta \cdot c_w)$
$M_{i,j} = \mathbf{1}\left(\left|\frac{F^{ij}_{ori}-\mu_1}{\sqrt{\sigma_1^2+\epsilon}} - \frac{F^{ij}_{aug}-\mu_2}{\sqrt{\sigma_2^2+\epsilon}}\right| < \tau\right)$
F^{ori}_{guide}
F^{aug}_{guide}
$F^{ori}_{invariant}$
$F^{aug}_{invariant}$
Domain Invariant Mask
(a)Backbone feature extract
(b) Class feature Guide
(c) Domain Invariant Feature Filtering
Part 2: Adaptive label-feature relevance construction
Flatten
Flatten & Linear Proj.
Key
Value
Transformer Cross-Attention
Queries
Learnable Label Embeddings
DR AMD Normal
Transformer Self-Attention
V^{ori}
V^{aug}
$\frac{1}{N \times d}\sum_{k=1}^{N}\sum_{j=1}^{d}\left(softmax(V^{ori}_{k,j}) - softmax(V^{aug}_{k,j})\right)^2$
$L_{consist}$
Shared Multi-label Classifier
$Logits^{ori}$
$Logits^{aug}$
DR
AMD
Normal
L^{ori}_{cls}
L^{aug}_{cls}
Classification Loss
(d) Multi-label relevance construct
(e) Attention feature align & Multi-label existence query
CNN Backbone
Original image feature
Augmented image feature
Cam guidance feature
Label embedding vector
Residual weighted fusion
Pixel-wise Multiplication