GENERAL NOTES SECTIONS

A. CONCRETE & FOUNDATION DESIGN:

1. ALL CONCRETE AND FOUNDATIONS ATTACHED TO THE HOST STRUCTURE SHALL HAVE A PRE INSPECTION.
2. ALL CONCRETE GRADE BEAMS AND FOOTINGS SHALL BE 3000 PSI MINIMUM.
3. ALL CONCRETE FILLED SUPPORTED SLABS SHALL BE 2500 PSI MINIMUM, 3 1/2" NOMINAL THICKNESS.
4. FIBERMESH (3/4" PER CUBIC YARD MIN.) MEETING APPROPRIATE ACI AND ASTM REQUIREMENTS MAY BE USED IN LIEU OF WELDED WIRE MESH
5. ALL SLABS ON GRADE SHALL BE A MINIMUM OF 4" THICK WITH FIBERMESH.
6. ALL REINFORCING SHALL CONFORM TO ASTM A615, BE GRADE 60 (60 KSI MIN.) DEFORMED BARS, #3 BARS MAY BE GRADE 40
7. ALL OVER POUR CONCRETE FILLED SUPPORTED SLABS SHALL BE 3000 PSI MIN., 2" MINIMUM. THICKNESS.
8. SOIL BEARING PRESSURE SHALL BE A MINIMUM OF 1500 PSF.
9. THE CONCRETE SHALL CONFORM TO ASTM C94 FOR THE FOLLOWING:
   - 9.1. OPC (PORTLAND CEMENT TYPE 1,- ASTM C 150).
   - 9.2. AGGREGATES - #6 STONE , ASTM C 33 SIZE NO. 67 LESS THAN 3/4".
   - 9.3. AIR ENTRAINING +/- 1% - ASTM C 260.
   - 9.4. WATER REDUCING AGENT - ASTM C 494.
   - 9.5. CLEAN POTABLE WATER.
   - 9.6. OTHER ADMIXTURES SHALL NOT BE PERMITTED.
10. METAL WELDED WIRE SHALL CONFORM TO ASTM A 185.
11. PREPARE & PLACE CONCRETE ACCORDING TO AMERICAN CONCRETE INSTITUTE MANUAL STANDARD PRACTICE, PART 1, 2, & 3 ALONG WITH HOT WEATHER CONDITIONS RECOMMENDATIONS.
12. IF UTILIZING EXISTING CONCRETE FOR FOUNDATION, CONCRETE SHALL BE A MINIMUM OF 4" IN THICKNESS, VISIBLY FREE OF ANY STRUCTURAL EXCESSIVE CRACKING, SPALLING OR OTHER DETERIORATION.

B. MASONRY:

1. CONCRETE MASONRY UNITS (CMU) SHALL BE STANDARD HOLLOW UNITS AND SHALL BE 2000 PSI MINIMUM BASED ON TYPE M OR S MORTAR.
2. ALL MORTAR SHALL BE OF TYPE M OR S.
3. ALL GROUT SHALL BE 2000 PSI MINIMUM AND HAVE MAXIMUM COARSE AGGREGATE SIZE OF 3/8".
4. PROVIDE CLEAN-OUTS FOR REINFORCED CELLS CONTAINING REINFORCEMENT WHEN GROUT POUR EXCEEDS 5'-0" IN HEIGHT.

C. ALUMINUM:

1. ALL STRUCTURAL ALUMINUM SHALL CONFORM TO THE MINIMUM REQUIREMENTS OF 6005-T5 FOR ALLOY WITH A MINIMUM THICKNESS OF 0.040" FOR SUPPORTING MEMBERS.
2. WHERE KICK PLATES ARE USED A MINIMUM THICKNESS OF 0.024" SHALL APPLY.
3. STRUCTURAL ALUMINUM DESIGN CONFORMS TO "PART 1-A - SPECIFICATIONS FOR ALUMINUM STRUCTURES - ALLOWABLE STRESS DESIGN" OR "PART 1-B - SPECIFICATIONS FOR ALUMINUM STRUCTURES - BUILDING LOAD AND RESISTANCE FACTOR DESIGN" OF THE ALUMINUM DESIGN MANUAL PREPARED BY THE ALUMINUM ASSOCIATION, INC.WASHINGTON D.C. FLORIDA BUILDING CODE EIGHTH EDITION (2023), BUILDING (CHAPTER 16 STRUCTURAL DESIGN & CHAPTER 20 ALUMINUM).
4. WHERE ALUMINUM COMES INTO CONTACT WITH STEEL, OR PRESSURE TREATED LUMBER PROVIDE DIELECTRIC SEPARATION.
5. ALUMINUM SELF MATING BEAM MEMBERS SHALL BE STITCHED WITH NO LESS THAN #10 SMS 6" FROM THE ENDS AND 12" ON CENTER, IF USING #12 SPACING MAY BE 24" ON CENTER.
6. VINYL AND ACRYLIC PANELS SHALL BE REMOVABLE. THEY SHALL BE IDENTIFIED WITH A DECAL ESSENTIALLY STATING "REMOVABLE PANEL SHALL BE REMOVED WHEN WIND SPEEDS EXCEED 75 MPH" . DECAL SHALL BE PLACED SO IT IS VISIBLE WHEN PANEL IS INSTALLED. VINYL AND ACRYLIC PANELS MAY NOT BE USED IN FLOOD ZONE A.
7. 1"X2"X0.040" NON-STRUCTURAL MEMBERS SHALL BE ATTACHED TO HOST WITH 1/4"Ø X 1-3/4" EMBEDMENT & 24" O.C. MASONRY SCREW FOR CONCRETE & EQUIVALENT SIZE WOOD SCREW WHEN IN WOOD & #10X 1/2" EMBEDMENT SMS OR TEK SCREWS IN ALUMINUM MEMBERS TYPICAL.

D. FASTENERS:

1. ALL LAG BOLTS SHALL CONFORM TO STAINLESS STEEL TYPE 300 18-8, WITH STANDARD FLAT WASHER UNLESS MANUFACTURER GALVANIZES BOLTS SPECIFIES FOR USE WITH ACQ PRESSURE TREATED WOOD.
2. HEX BOLTS HAS TO BE ASTM A 325, PLATED WITH STANDARD FLAT WASHERS AND NUTS.
3. ALL CONCRETE SCREWS SHALL BE, SIMPSON, HILTI, RAWL, TAPCON, REDHEAD, DYNABOLT, PORTECT OR APPROVED EQUAL.
4. ALL METAL TIES AND ASSOCIATED ACCESSORIES SHALL BE HOT DIPPED GALVANIZED.
5. ALL LAG BOLTS SHALL HAVE A MINIMUM EMBEDMENT OF 8X BOLT DIAMETER INTO STRUCTURAL FRAMING (G=.42 MIN.).
6. LAG BOLTS AND SCREWS INTO WOOD FRAMING SHALL BE PROVIDED WITH PILOT HOLES HAVING A DIAMETER NOT GREATER THAN 70 PERCENT OF THE THREAD DIAMETER OF THE BOLT OR SCREW. ALL LAG BOLTS AND SCREWS SHALL BE INSERTED IN PILOT HOLES BY TURNING AND UNDER NO CIRCUMSTANCES BY DRIVING WITH A HAMMER.
7. ALL EXPANSION ANCHORS SHALL BE DESIGNED IN ACCORDANCE WITH THE SPECIFIC MANUFACTURER'S REQUIREMENTS AND ALLOWABLE LOADS AND SHALL ONLY BE APPLIED IN CONDITIONS ACCEPTABLE TO MANUFACTURER. FASTENERS SHALL BE A MINIMUM OF SAE GRADE #5 OR BETTER ZINC PLATED.
8. ALL FASTENERS CONNECTING ALUMINUM COMPONENTS OR PRESSURE TREATED LUMBER ARE STAINLESS STEEL TYPE 300 18-8, UNLESS MANUFACTURER GALVANIZED BOLTS SPECIFIES FOR USE WITH ACQ PRESSURE TREATED WOOD, OR OTHERWISE NOTED ON PLANS.
9. ALL FASTENERS SHALL COMPLY WITH ASTM A153.
10. ALL CONNECTORS SHALL COMPLY WITH ASTM A653 CLASS G-185.
11. FOR SMS, THE MINIMUM CENTER-TO-CENTER SPACING SHALL BE 3/4" AND MINIMUM CENTER-TO-EDGE SHALL BE 1/2" UNLESS NOTED OTHER WISE.

E. REFERENCE STANDARDS: (CURRENT EDITIONS OF)

ASTM E 119
ASTM E 1300
ASCE 7
ALUMINUM DESIGN MANUAL-AA ASM35, AND SPEC. FOR ALUMINUM PART 1-A, & 1-B
ASTM C94
ASTM C150
ASTM C33
ASTM C260
ASTM C494
ASTM A615
ASTM A185
FLORIDA BUILDING CODE EIGHTH EDITION (2023), BUILDING
FLORIDA BUILDING CODE EIGHTH EDITION (2023), RESIDENTIAL

F. ABBREVIATIONS:

THE FOLLOWING LIST OF ABBREVIATIONS IS NOT INTENDED TO REPRESENT ALL THOSE USED ON THESE DRAWINGS, BUT TO SUPPLEMENT THE MORE COMMON ABBREVIATIONS.

1. TYP -- TYPICAL
2. SIM -- SIMILAR
3. UON -- UNLESS OTHERWISE NOTED
4. CONT -- CONTINUOUS
5. VIF -- VERIFY IN FIELD
6. SMB -- SELF MATING BEAM
7. FSM -- FLORIDA SALES AND MARKETING
8. REC -- RECEIVING CHANNEL

G. RESPONSIBILITY:

1. ALL SITE WORK SHALL BE PERFORMED BY A LICENSED CONTRACTOR IN ACCORDANCE WITH APPLICABLE BUILDING CODES, LOCAL ORDINANCES, ETC.
2. CONTRACTOR SHALL VERIFY ALL DIMENSIONS AND DETAILS, NOTIFYING ENGINEER OF ANY DISCREPANCIES BETWEEN DRAWINGS, FABRICATED ITEMS, OR ACTUAL FIELD CONDITIONS.
3. THESE DRAWINGS REPRESENT THE ACCEPTABILITY OF THE 'SUNROOM' ROOM ADDITION ELEMENTS AS PROVIDED BY THE CONTRACTOR.
4. ALL DETAILS ON THESE DRAWINGS ARE ENGINEERED BASED ON INFORMATION PROVIDED BY THE CONTRACTOR AND MANUFACTURER.
5. ANY DETAILS NOT SHOWN ARE TO BE ENGINEERED BY A LICENSED P.E. IN ACCORDANCE WITH STANDARD ENGINEERING PRACTICES.
6. WHEN ATTACHING TO FASCIA, THE HOST STRUCTURE SHALL HAVE AT LEAST A 2"X4" FASCIA AND ROOF TRUSS SYSTEM. CONTRACTOR SHALL VERIFY THIS AND IF SMALLER, CONTRACTOR SHALL BRING STRUCTURE UP TO A 2"X4" FASCIA AND ENSURE LESS THAN A 2'-0" OVERHANG.
7. FBC PLANS & ENGINEERING SERVICES INC. DOES NOT WARRANT, EITHER EXPRESSLY OR IMPLIED, THE QUALITY OF THE CONSTRUCTION, AND IS NOT RESPONSIBLE FOR THE INTERPRETATION OF DESIGNS AND END USE BY THE CLIENT/CONTRACTOR.
8. CONTRACTOR TO VERIFY FEMA FLOOD ZONE OF THE PROPOSED STRUCTURE LOCATION TO ENSURE STRUCTURE IS NOT WITHIN SPECIAL FLOOD HAZARD AREAS.

H. MISCELLANEOUS:

1. ALUMINUM ADDITIONS ARE NOT TO BE INSTALLED ON A MANUFACTURED HOME, TRAILER HOME, OR PRE-FAB HOME. IF THE EXISTING STRUCTURE IS ONE OF THESE, A SEPARATE 4TH WALL SUPPORT SYSTEM MUST BE ENGINEERED SO THAT NO ADDITIONAL LOADING IS PLACED ON THE MANUFACTURED HOME.
2. IF ENCLOSURE CONTAINS A SWIMMING POOL OR SPA, THE ENCLOSURE SHALL COMPLY WITH RESIDENTIAL SWIMMING BARRIER REQUIREMENTS OF FLORIDA BUILDING CODE EIGHTH EDITION (2023), RESIDENTIAL R 4501.17 IN ITS ENTIRETY.
3. DOOR LOCATIONS MAY BE DETERMINED IN THE FIELD BY CONTRACTOR.
4. IF PAVERS ARE UNDER ALUMINUM MEMBERS THEY SHALL HAVE EPOXY ADHESIVE TO CONCRETE OR IF USING GROUT, ENSURE BONDING AGENT IS USED FIRST AND ADHERED WITH MINIMUM 3000 PSI GROUT.
5. SCREENING MATERIAL SHALL BE 18X14X0.013 OR EQUIVALENT DENSITY SCREEN MESH ONLY UNLESS NOTED ON DRAWING S-2.
6. ALL STRUCTURAL POST SHALL BE ANCHORED TO AN EXISTING/PROPOSED CONCRETE FOUNDATION FOR UPLIFT PURPOSES.
7. TORNADO CODE NOT APPLICABLE TO RISK CATEGORY 1 AND RISK CATEGORY 2 STRUCTURES
   - 7.1. ASCE/SEI STANDARD 7-22, FIGS. 32.5-1, 32.5-2, AND G.2-1 THROUGH -4
8. CONTRACTOR TO ENSURE ALL PROPOSED GUTTERS HAVE A POSITIVE FLOW.

BB

SCREEN ENCLOSURE

DESIGN DATA: (SITE SPECIFIC DESIGN INFORMATION)

1. ULTIMATE DESIGN WIND SPEED Vult, (3 SECOND GUST): 140 MPH
   NOMINAL DESIGN WIND SPEED Vasd: 108 MPH
2. RISK CATEGORY: 1
3. WIND EXPOSURE: C
4. WIND LOADS:
   - SCREEN ROOF: 11 PSF
   - SCREEN WALLS (WINDWARD): 38 PSF
   - SCREEN WALLS (LEEWARD): 29 PSF
   - SOLID ROOF: N/A
5. FACTOR APPLIED TO SCREEN WIND LOADS FOR 18/14: 0.88
   - FACTOR APPLIED TO SCREEN WIND LOADS FOR 20/20: 1.0
   - MESH TYPE AND LOCATION SHOWN ON S-2
   - FACTORS FOR OTHER SCREEN MESHES TO BE DETERMINED BY THE ENGINEER
6. FACTOR APPLIED TO SCREEN WIND LOADS FOR ALLOWABLE STRESS DESIGN: 0.6
7. LIVE LOAD:
   - 300 lb. VERTICAL DOWNLOAD ON PRIMARY SCREEN ENCLOSURE MEMBERS.
   - 200 lb. VERTICAL DOWNLOAD ON SCREEN ENCLOSURE PURLINS.
8. SCREEN ROOF TYPE: MANSARD
9. NON-SCREEN ROOF TYPE: N/A
10. EXISTING BLOCK WALL MEETS THE REQUIREMENTS TO RESIST THE UPLOADS FOR THE PROPOSED STRUCTURE.

ALUMINUM STRUCTURAL MEMBERS

HOLLOW SECTIONS

2 X 2:----------2" X 2" X 0.044"
2 X 3:----------2" X 3" X 0.050"
2 X 4:----------2" X 4" X 0.050"
2 X 5:----------2" X 5" X 0.050"
3 X 3:----------3" X 3" X 0.125"

OPEN BACK SECTIONS

1 X 2:----------1" X 2" X 0.040"
1 X 3:----------1" X 3" X 0.045"

SNAP SECTIONS

2 X 2 SMS:----------2" X 2" X 0.045"
2 X 3 SMS:----------2" X 3" X 0.072"
2 X 4 SMS:----------2" X 4" X 0.045"
3 X 3 SMS:----------3" X 3" X 0.090"

SELF MATING (SMB)

2 X 4 SMB:----------2" X 4" X 0.044" X 0.100"
2 X 5 SMB:----------2" X 5" X 0.050" X 0.118"
2 X 6 SMB:----------2" X 6" X 0.050" X 0.120"
2 X 7 SMB:----------2" X 7" X 0.057" X 0.120"
2 X 8 SMB:----------2" X 8" X 0.072" X 0.224"
2 X 9 SMB:----------2" X 9" X 0.072" X 0.224"
2 X 10 SMB:----------2" X 10" X 0.092" X 0.374"

TUBE SECTIONS

2 X 2:----------2" X 2" X 0.090"

INDEX

S-1 NOTES
S-2 DRAWING
S-3 DETAILS
S-4 DETAILS
S-5 DETAILS

This item has been digitally signed and sealed by Ian J. Foster. Printed copies of this document are not considered signed and sealed and the signature must be verified on any electronic copies.

IAN J. FOSTER LICENSE No. 93654 STATE OF FLORIDA PROFESSIONAL ENGINEER

Digitally signed by Ian J Foster
Date: 2025.09.13 11:58:48 -04'00'

PROFESSIONAL ENGINEER SEAL

P.E. OF RECORD
DAVID W. SMITH FL 53608
THOMAS L. HANSON FL 38654
IAN J. FOSTER FL 93654
JOEL FALARDEAU FL 70667
ERIK STUART FL 77605

FBC PLANS & ENGINEERING SERVICES, INC.
ADDRESS: 5344 9th Street Zephyrhills, FL 33542
PHONE: (813)838-0735
FAX: 1-(866)824-7894
E-MAIL: erb@fbcplans.com
WEBSITE: www.fbcplans.com
C.O.A.: #29054

PROJECT
LANDIS
4129 HIGEL AVE
SIESTA KEY, FL 34242

CONTRACTOR
REPLACE MY CAGE
6301 PORTER ROAD UNIT 12
SARASOTA, FL 34240

JOB NUMBER: 25_0902_192_LANDIS_REPLACEMC

DRAW DATE: 09/08/2025

REVISION 1:
REVISION 2:
REVISION 3:

NOTES

S-1

18/14 SCREEN TO BE USED

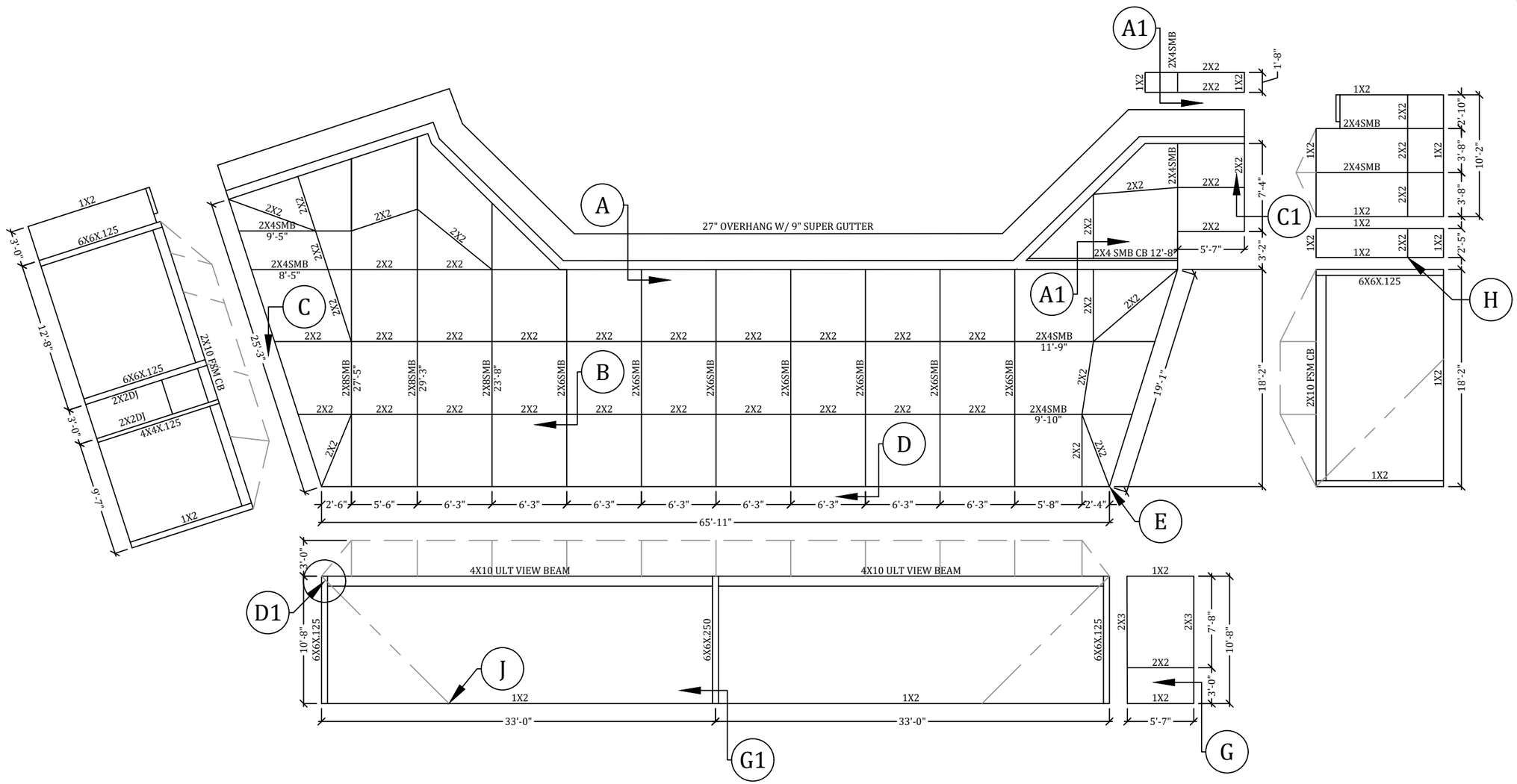

DOOR LOCATION MAY BE DETERMINED IN THE FIELD BY THE CONTRACTOR.

This item has been digitally signed and sealed by Ian J. Foster. Printed copies of this document are not considered signed and sealed and the signature must be verified on any electronic copies.

IAN J. FOSTER LICENSE No. 93654 STATE OF FLORIDA PROFESSIONAL ENGINEER

Digitally signed by Ian J Foster
Date: 2025.09.13 12:02:02 -04'00'

PROFESSIONAL ENGINEER SEAL

P.E. OF RECORD	
DAVID W. SMITH	FL 53608
THOMAS L. HANSON	FL 38654
IAN J. FOSTER	FL 93654
JOEL FALARDEAU	FL 70667
ERIK STUART	FL 77605

FBC PLANS & ENGINEERING SERVICES, INC.

ADDRESS: 5344 9th Street Zephyrhills, FL 33542
PHONE: (813)838-0735
FAX: 1-(866)824-7894
E-MAIL: erb@fbcplans.com
WEBSITE: www.fbcplans.com
C.O.A.: #29054

Florida Building Code PLANS & ENGINEERING SERVICES, INC

PROJECT
LANDIS
4129 HIGEL AVE
SIESTA KEY, FL 34242

CONTRACTOR
REPLACE MY CAGE
6301 PORTER ROAD UNIT 12
SARASOTA, FL 34240

JOB NUMBER:
25_0902_192_LANDIS_REPLACEMC

DRAW DATE: 09/08/2025

REVISION 1:

REVISION 2:

REVISION 3:

DRAWING

S-2

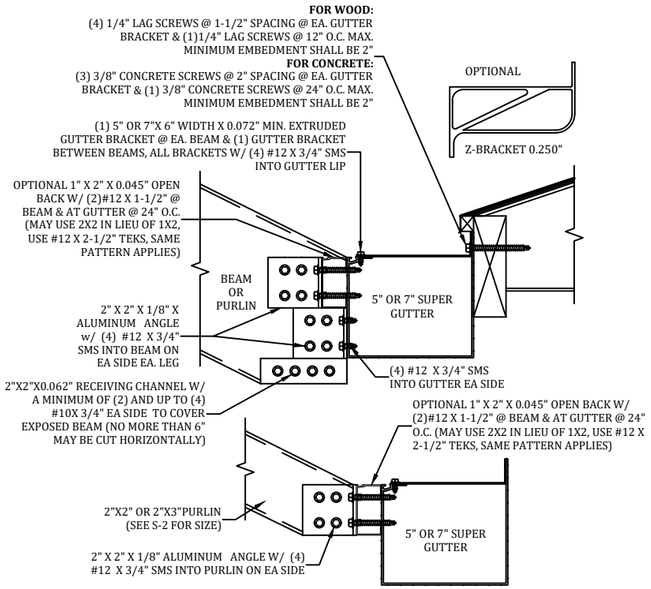

NOTES:
1. 2X4 SMB BEAM ONLY REQUIRES 4" WIDTH GUTTER BRACKET W/ (2) 3/8" LAGS

A

GUTTER BRACKET & BEAM ATTACHMENT DETAIL
SCALE: N.T.S.

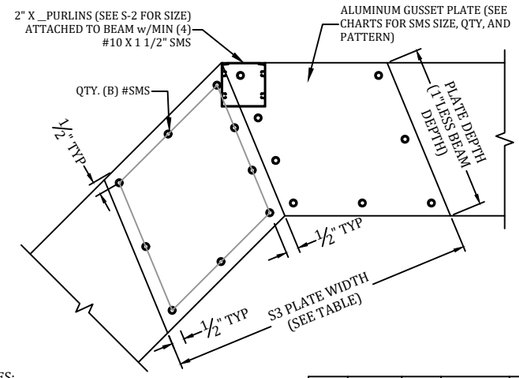

NOTES:
1. TOTAL NUMBER OF SCREWS PER JOINT EQUALS 4 TIMES "B".
2. PLATE WIDTH SHALL BE DETERMINED FROM ANGLE OF BEAM AND MINIMUM SPACE REQUIRED."S3" IS MINIMUM PLATE WIDTH.
3. GUSSET PLATES CAN EXTERNAL OR INTERNAL.
4. INTERNAL SCREWS FOR PURLIN CONNECTION MAY BE INCLUDED IN TOTAL NUMBER OF SCREWS.
5. **ALL** SPLICES WILL HAVE THE SAME PATTERN.
6. **ALL** SCREWS SHALL BE SPACED EQUALLY.
7. DETAIL SHOWS 2X6SMB WITH $\frac{1}{8}$" ALUMINUM GUSSET PLATE AS AN EXAMPLE.

BEAM	GUSSET PLATE	SMS	"B"	"S3"
2X4	1/8"	#12	9/18/36	16"
2X5	1/8"	#12	9/18/36	16"
2X6	3/16"	#12	9/18/36	16"
2X7	3/16"	#12	10/20/40	18"
2X8	3/16"	#12	14/28/56	18"
2X8	3/16"	#14	12/24/48	18"
2X9	3/16"	#14	14/28/56	20"
2X10	3/16"	#14	15/30/60	20"

B

BEAM SPLICE GUSSET DETAIL
SCALE: N.T.S.

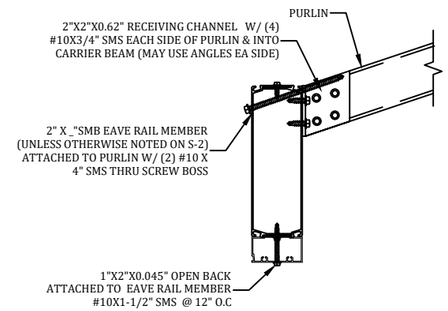

C

SLOPED OR FLAT PURLIN CONNECTION DETAIL
SCALE: N.T.S.

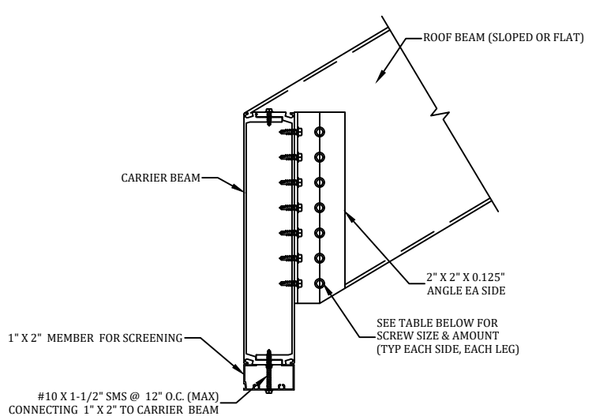

ROOF BEAM SIZE	3/4" SMS PER SIDE PER LEG OF ANGLE	QTY.
2X4	#12	4
2X5	#12	5
2X6	#12	5
2X7	#14	6
2X8	#14	7
2X9	#14	8
2X10	#14	9

D

BEAM TO CARRIER BEAM CONNECTION DETAIL
SCALE: N.T.S.

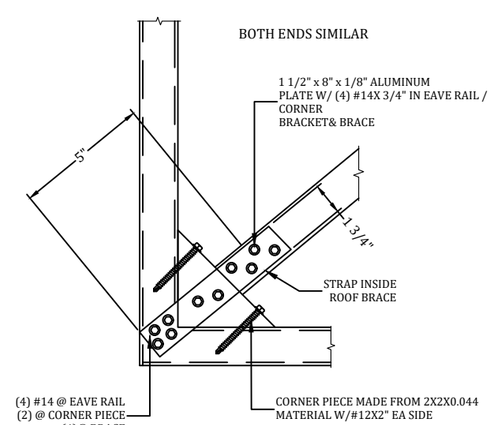

E

ROOF BRACING CONNECTION DETAIL
SCALE: N.T.S.

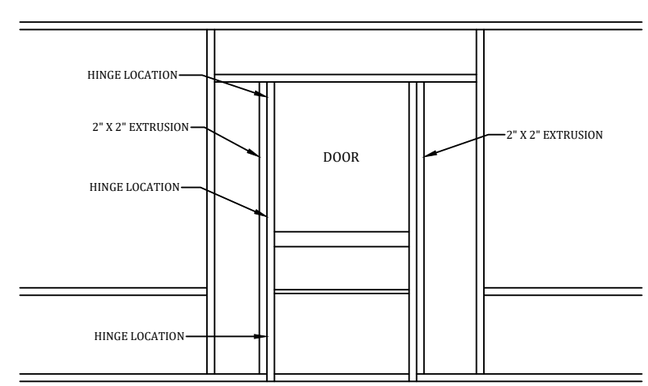

NOTES:
1. HINGES SHALL BE ATTACHED TO STRUCTURE W/ (3) #10 X 5/8" SMS MINIMUM.
2. DOOR SHALL BE ATTACHED TO ENCLOSURE W/(2) HINGES MINIMUM.
3. HINGES SHALL BE ATTACHED TO DOOR WITH (3)#10 X 5/8" SMS. FASTEN A 1" X 2" X 0.044" TO UPRIGHT W/#12 X 1" SMS @ 12" O.C. AND WITHIN 3" FROM END OF THE UPRIGHT(IF APPLICABLE).

F

TYPICAL SCREEN DOOR CONNECTION DETAIL
SCALE: N.T.S.

This item has been digitally signed and sealed by Ian J. Foster. Printed copies of this document are not considered signed and sealed and the signature must be verified on any electronic copies.

IAN J. FOSTER LICENSE No. 93654 STATE OF FLORIDA PROFESSIONAL ENGINEER

Digitally signed by Ian J Foster
Date: 2025.09.13 12:02:10 -04'00'

PROFESSIONAL ENGINEER SEAL

P.E. OF RECORD	
DAVID W. SMITH	FL 53608
THOMAS L. HANSON	FL 38654
IAN J. FOSTER	FL 93654
JOEL FALARDEAU	FL 70667
ERIK STUART	FL 77605

FBC PLANS & ENGINEERING SERVICES, INC.

ADDRESS: 5344 9th Street Zephyrhills, FL 33542
PHONE: (813)838-0735
FAX: 1-(866)824-7894
E-MAIL: erb@fbcplans.com
WEBSITE: www.fbcplans.com
C.O.A.: #29054

PROJECT
LANDIS
4129 HIGEL AVE
SIESTA KEY, FL 34242

CONTRACTOR
REPLACE MY CAGE
6301 PORTER ROAD UNIT 12
SARASOTA, FL 34240

JOB NUMBER: 25_0902_192_LANDIS_REPLACEMC

DRAW DATE: 09/08/2025

REVISION 1:

REVISION 2:

REVISION 3:

DETAILS

S-3

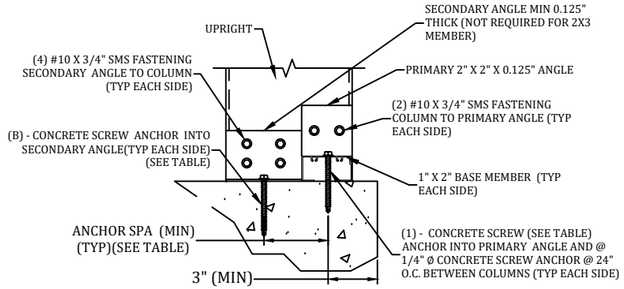

COLUMN SIZE	1/4" AND 3/8" Ø CONCRETE SCREW ANCHOR	
	"B"	MINIMUM SPACING
2X3-1/4"	0	0"
2X4-1/4"	1	2"
2X5-1/4"	1	2 ½"
2X6-3/8"	1	3"
2X7-3/8"	1	3 ½"
2X8-3/8"	2	3"
2X9-3/8"	2	3 ½"
2X10-3/8"	2	4"

NOTES:
1. NUMBER OF ANCHORS "B" IS EACH SIDE INTO THE SECONDARY ANGLE AND DOES NOT INCLUDE THE ANCHOR INTO THE 1X2.
2. MINIMUM EMBEDMENT OF ANCHORS INTO CONCRETE FOOTING SHALL BE 2-3/4" AT ALL UPRIGHT LOCATIONS. ALL SCREW LENGTHS AT UPRIGHT CONNECTIONS SHALL BE OF SUFFICIENT LENGTH FOR REQUIRED EMBEDMENT INTO CONCRETE FOOTING WHEN A PAVER DECK IS PRESENT.
3. CONCRETE SCREW ANCHOR DESIGNS ARE BASED ON THOSE LISTED ON S-1, D. FASTENERS, OTHER BRAND & TYPE SHALL BE APPROVED BY ENGINEER.
4. 2X3W/1X2 CORNER POST SHALL REQUIRE SAME BASE CONNECTIONS AS 2X4 SHOWN IN TABLE.
5. IF FOR AN IN-FILL, TOP OF COLUMN CONNECTION SIMILAR IF CONCRETE LINTEL.
6. IF WOOD LINTEL/DECK, DOUBLE LEDGE REQUIRED (MIN. 3 ⅝") MAY SUBSTITUTE LAG SCREW FOR LDT FOR BOTH PRIMARY & SECONDARY ANGLES.
7. 2X2X.045 DOOR JAMB MEMBER SHALL CONNECT SIMILAR TO 2X3 MEMBER.

G

2" X 3" OR LARGER UPRIGHT TO CONCRETE W/WO PAVER DETAILS
SCALE: N.T.S.

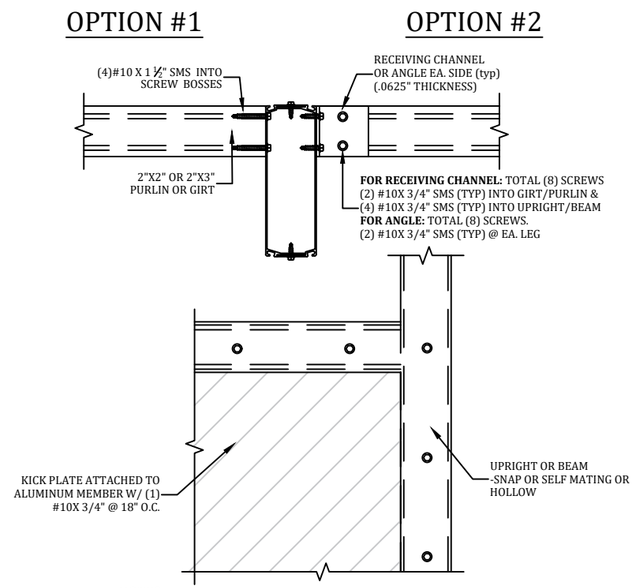

NOTES:
1. KICK PLATE TO BE APPLIED TO UPRIGHT CHAIRRAIL OR GIRT IF APPLICABLE

H

PURLIN OR GIRT TO BEAM OR POST DETAIL
SCALE: N.T.S.

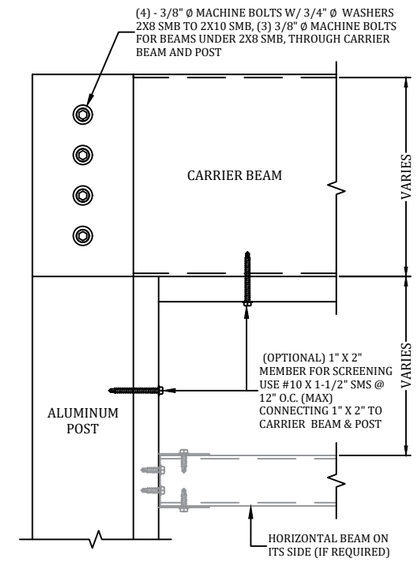

NOTE:
1. PERPENDICULAR CARRIER BEAM: USE 0.125" RECEIVING CHANNEL WHICH WILL CONNECT TO THE POST W/(4) 3/8" THRU BOLTS USED FOR THE PRIMARY CARRIER BEAM, THEN USE (3) 3/8"Ø MACHINE BOLTS W/ 3/4"Ø WASHERS TO ATTACH THE PERPENDICULAR CARRIER BEAM TO THE RECEIVING CHANNEL.
2. HORIZONTAL BEAM DETAIL WILL BE PROVIDED IF NEEDED.

D1

BEAM TO POST DETAIL
SCALE: N.T.S.

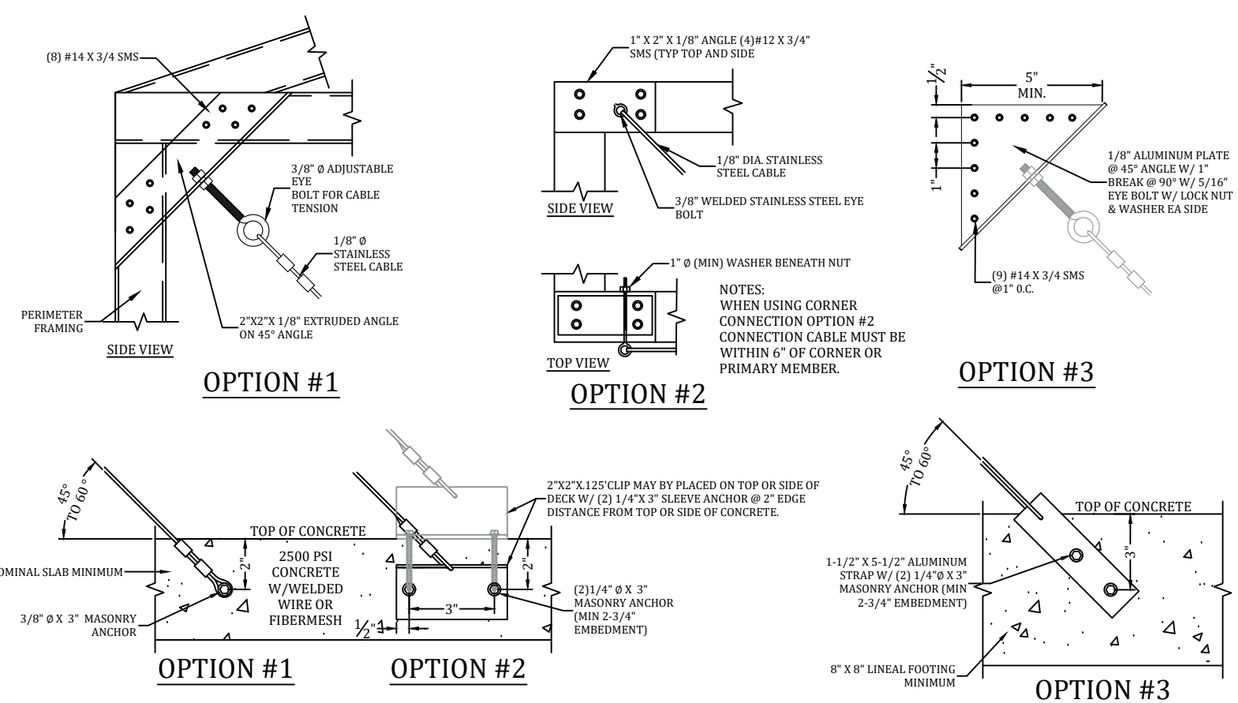

J

CABLE CONNECTION AT CORNER AND FOUNDATION
SCALE: N.T.S.

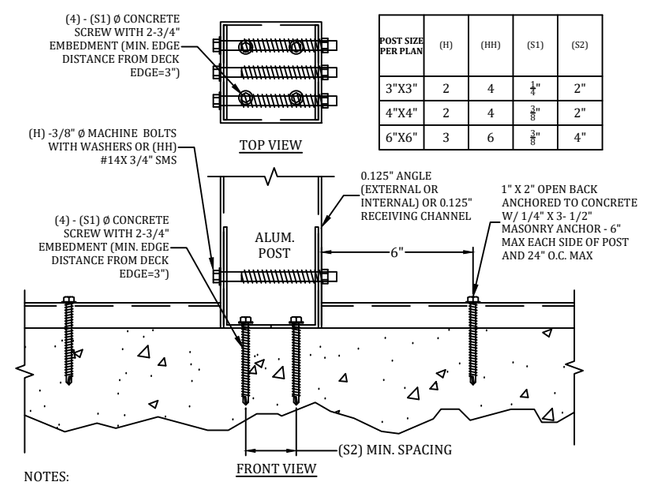

POST SIZE PER PLAN	(H)	(HH)	(S1)	(S2)
3"X3"	2	4	1/4"	2"
4"X4"	2	4	3/8"	2"
6"X6"	3	6	3/8"	4"

NOTES:
1. CONCRETE SCREW ANCHOR DESIGNS ARE BASED ON TITEN HD (S1) Ø SCREW ANCHORS, OTHER SIZE OR TYPE OF ANCHORS SHALL NOT BE USED.
2. FOR PATIO COVERS AND CARPORTS: DISREGARD THE 1X2 OPEN BACK SCREEN MEMBER ON THE FOUNDATION TYP.
3. MINIMUM EMBEDMENT OF ANCHORS INTO CONCRETE FOOTING SHALL BE 2-3/4" AT ALL POST LOCATIONS. ALL SCREW LENGTHS AT POST CONNECTIONS SHALL BE OF SUFFICIENT LENGTH FOR REQUIRED EMBEDMENT INTO CONCRETE FOOTING WHEN A PAVER DECK IS PRESENT.
4. MINIMUM EMBEDMENT OF ANCHORS INTO CONCRETE FOOTING SHALL BE 2-3/4" AT AT ALL UPRIGHT LOCATIONS. ALL SCREW LENGTHS AT UPRIGHT CONNECTIONS SHALL BE OF SUFFICIENT LENGTH FOR REQUIRED EMBEDMENT INTO CONCRETE FOOTING WHEN A PAVER DECK IS PRESENT.
5. DETAIL MAY BE FLIPPED AS NEEDED
6. USE 1/4" X 3" LAG SCREWS IN LIEU OF CONCRETE SCREWS FOR WOOD HEADERS, JOISTS, AND GIRDERS

G1

ALUM. POST CONNECTION DETAIL
SCALE: N.T.S.

This item has been digitally signed and sealed by Ian J. Foster. Printed copies of this document are not considered signed and sealed and the signature must be verified on any electronic copies.

IAN J. FOSTER LICENSE No. 93654 STATE OF FLORIDA PROFESSIONAL ENGINEER

Digitally signed by Ian J Foster
Date: 2025.09.13 12:02:17 -04'00'

PROFESSIONAL ENGINEER SEAL

P.E. OF RECORD	
DAVID W. SMITH	FL 53608
THOMAS L. HANSON	FL 38654
IAN J. FOSTER	FL 93654
JOEL FALARDEAU	FL 70667
ERIK STUART	FL 77605

FBC PLANS & ENGINEERING SERVICES, INC.
ADDRESS: 5344 9th Street Zephyrhills, FL 33542
PHONE: (813)838-0735
FAX: 1-(866)824-7894
E-MAIL: erb@fbcplans.com
WEBSITE: www.fbcplans.com
C.O.A.: #29054

PROJECT
LANDIS
4129 HIGEL AVE
SIESTA KEY, FL 34242

CONTRACTOR
REPLACE MY CAGE
6301 PORTER ROAD UNIT 12
SARASOTA, FL 34240

JOB NUMBER: 25_0902_192_LANDIS_REPLACEMC
DRAW DATE: 09/08/2025
REVISION 1:
REVISION 2:
REVISION 3:

DETAILS

S-4

OPTION #1

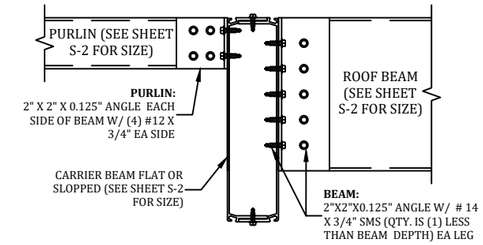

OPTION #2

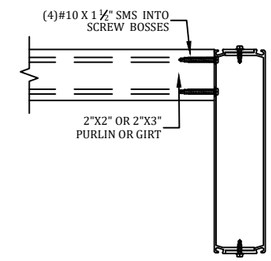

H1 BEAM & PURLIN TO CARRIER BEAM CONNECTION DETAIL
SCALE: N.T.S.

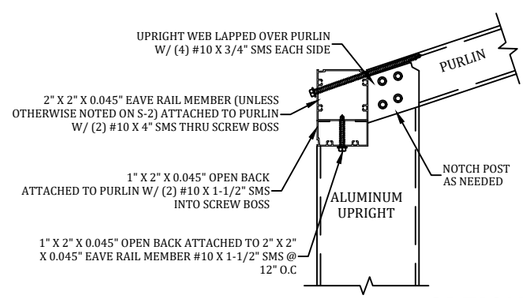

OPTION #1

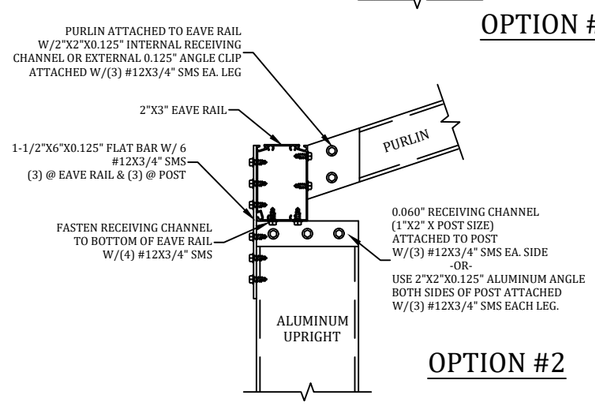

OPTION #2

NOTE: 2"X3" SPECIAL MAY BE USED IN LIEU OF 2"X2" W/1"X2" COMBO

C1 SLOPED OR FLAT PURLIN UPRIGHT LAP DETAIL
SCALE: N.T.S.

CHART #1	
#12 SCREWS	#14 SCREWS
3/4"	3/4"

CHART #2		
BEAM	#12 SCREWS QTY.	#14 SCREWS QTY.
2"X4" SMB	8	6
2"X5" SMB	8	6
2"X6" SMB	10	8
2"X7" SMB	10	8
2"X8" SMB	12	10
2"X9" SMB	12	10
2"X10" SMB	14	12

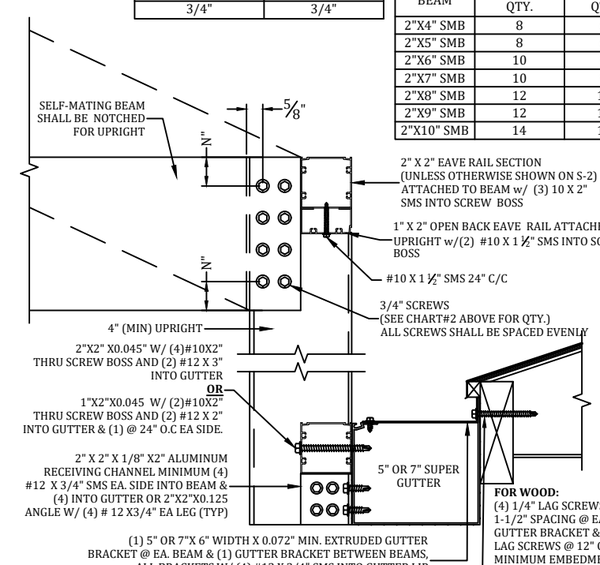

NOTES:
1. "N" IS DISTANCE FROM EDGE OF BEAM. (SEE CHART #1)
2. FOR SLOPED BEAMS, MAINTAIN ALL SCREW SPACING FROM EDGE OF BEAM.
3. PURLIN CONNECTION IS SIMILAR TO "C" DETAIL

A1 TRANSOM TO SUPER GUTTER ROOF DETAIL
SCALE: N.T.S.

This item has been digitally signed and sealed by Ian J. Foster. Printed copies of this document are not considered signed and sealed and the signature must be verified on any electronic copies.

IAN J. FOSTER LICENSE No. 93654 STATE OF FLORIDA PROFESSIONAL ENGINEER

Digitally signed by Ian J Foster
Date: 2025.09.13 12:02:24 -04'00'

PROFESSIONAL ENGINEER SEAL

P.E. OF RECORD	
DAVID W. SMITH	FL 53608
THOMAS L. HANSON	FL 38654
IAN J. FOSTER	FL 93654
JOEL FALARDEAU	FL 70667
ERIK STUART	FL 77605

FBC PLANS & ENGINEERING SERVICES, INC.

ADDRESS: 5344 9th Street Zephyrhills, FL 33542
PHONE: (813)838-0735
FAX: 1-(866)824-7894
E-MAIL: erb@fbcplans.com
WEBSITE: www.fbcplans.com
C.O.A.: #29054

PROJECT
LANDIS
4129 HIGEL AVE
SIESTA KEY, FL 34242

CONTRACTOR
REPLACE MY CAGE
6301 PORTER ROAD UNIT 12
SARASOTA, FL 34240

JOB NUMBER: 25_0902_192_LANDIS_REPLACEMC

DRAW DATE: 09/08/2025

REVISION 1:

REVISION 2:

REVISION 3:

DETAILS

S-5