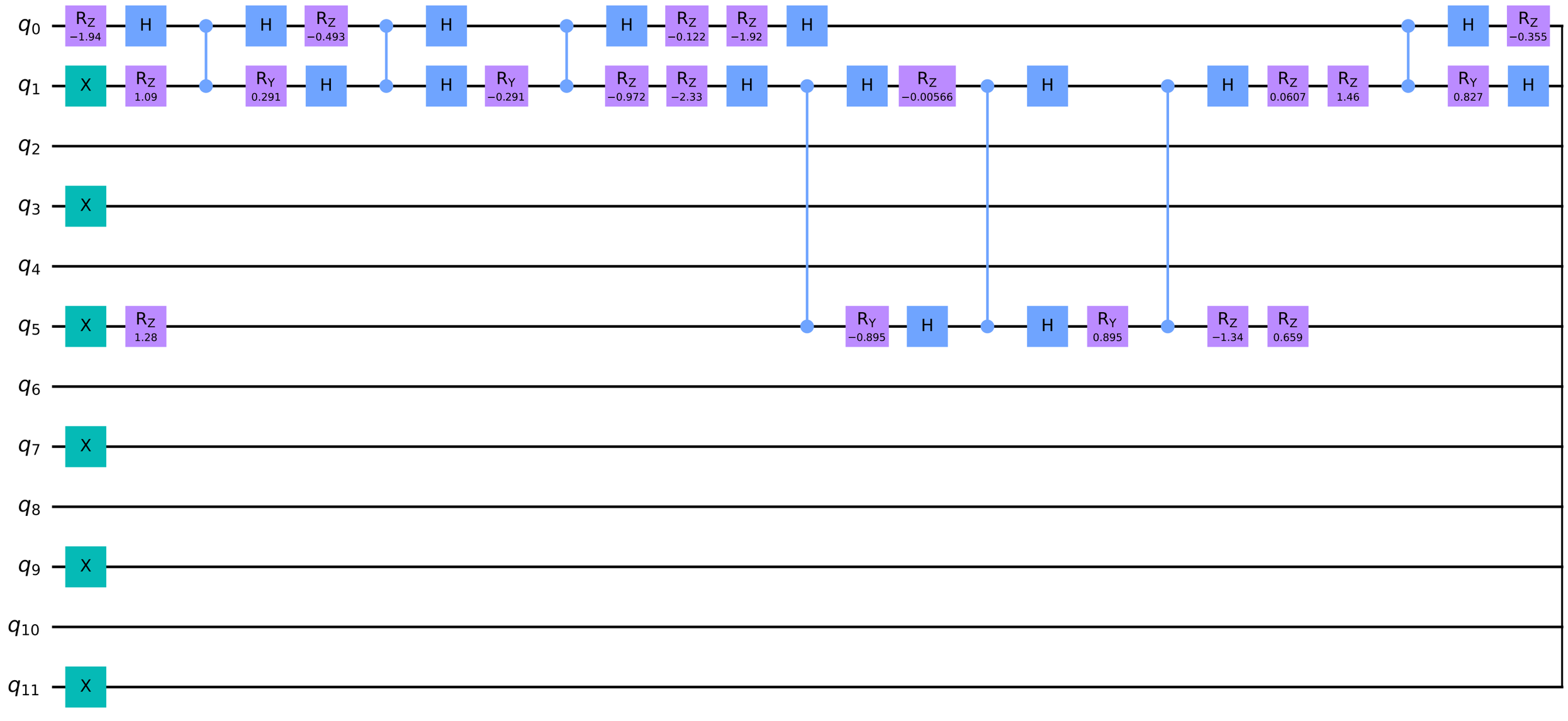
q_0
q_1
q_2
q_3
q_4
q_5
q_6
q_7
q_8
q_9
q_{10}
q_{11}
R_Z −1.94
H
X
R_Z 1.09
X
X
R_Z 1.28
X
X
X
H
R_Y 0.291
R_Z −0.493
H
H
R_Y −0.291
H
R_Z −0.972
R_Z −0.122
R_Z −2.33
R_Z −1.92
H
H
H
R_Y −0.895
R_Z −0.00566
H
H
R_Y 0.895
H
R_Z −1.34
R_Z 0.0607
R_Z 1.46
H
R_Y 0.827
R_Z −0.355
H

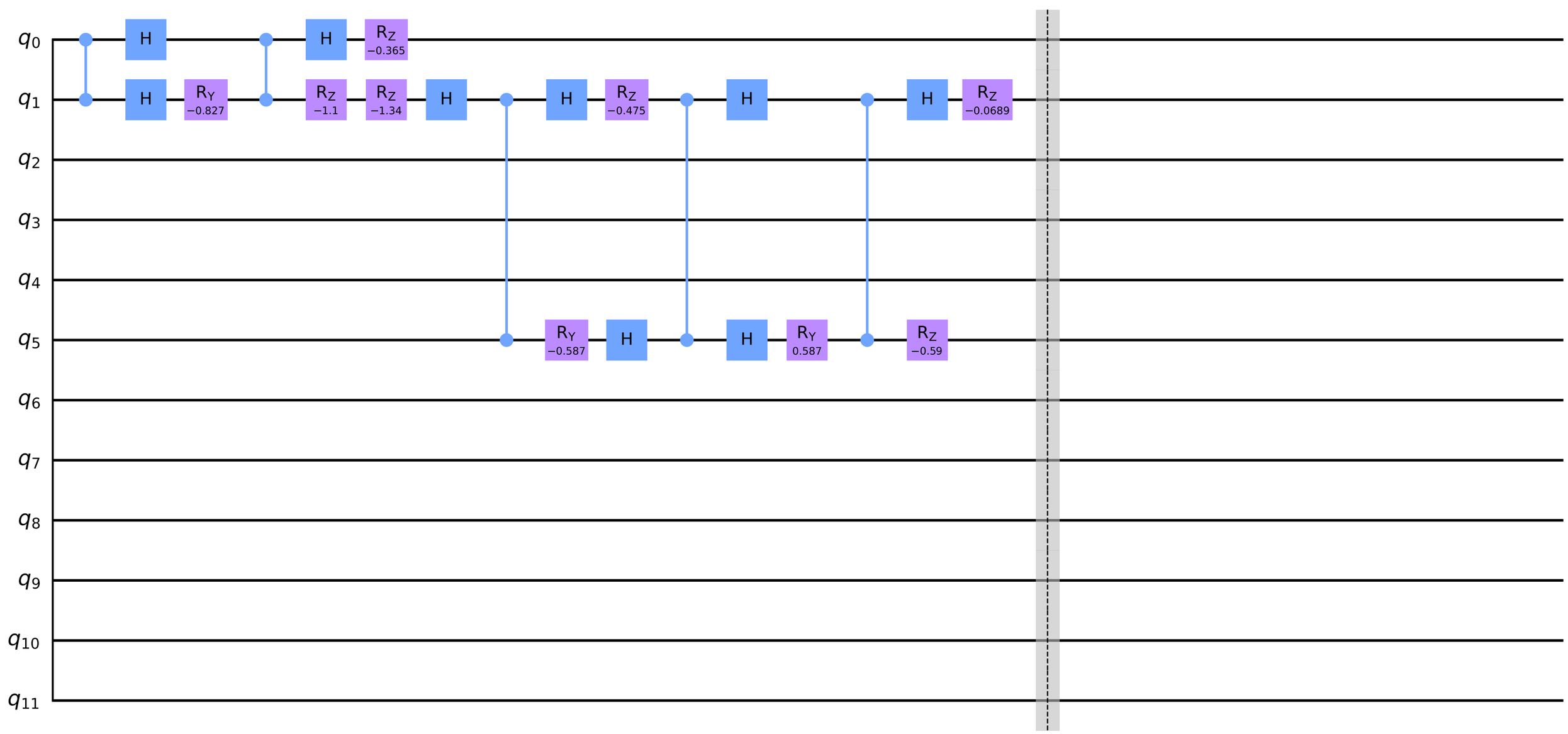
q_0
q_1
q_2
q_3
q_4
q_5
q_6
q_7
q_8
q_9
q_{10}
q_{11}
H
H
R_Y −0.827
H
R_Z −0.365
R_Z −1.1
R_Z −1.34
H
H
R_Z −0.475
R_Y −0.587
H
H
H
R_Y 0.587
H
R_Z −0.0689
R_Z −0.59