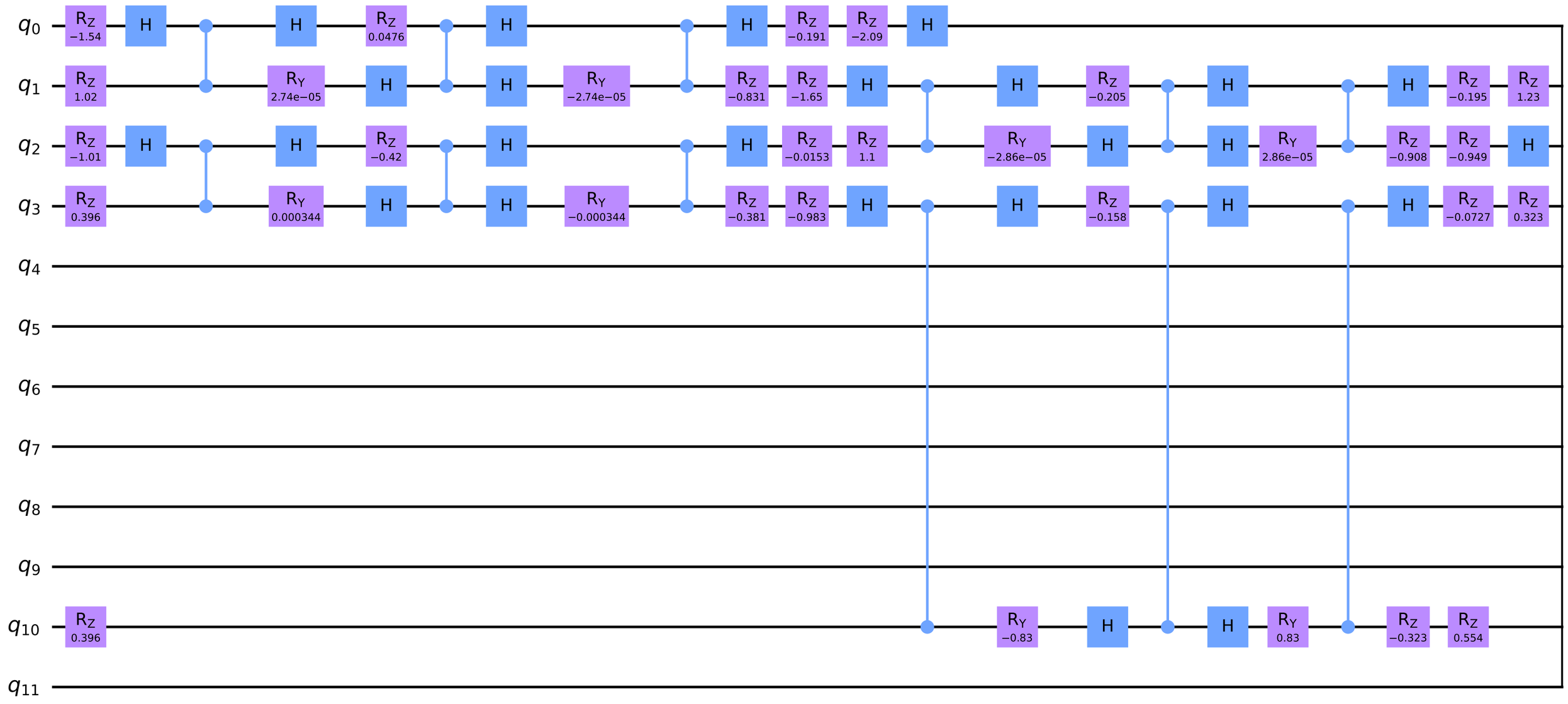
q_0
q_1
q_2
q_3
q_4
q_5
q_6
q_7
q_8
q_9
q_{10}
q_{11}
R_Z −1.54
H
R_Z 1.02
R_Z −1.01
H
R_Z 0.396
H
R_Y 2.74e−05
R_Y 0.000344
R_Z 0.0476
H
R_Z −0.42
H
H
H
H
H
R_Y −2.74e−05
R_Y −0.000344
H
R_Z −0.191
R_Z −2.09
H
R_Z −0.831
R_Z −1.65
H
H
R_Z −0.0153
R_Z 1.1
H
R_Z −0.381
R_Z −0.983
H
H
R_Y −2.86e−05
H
H
R_Z −0.205
H
R_Z −0.158
H
H
R_Y 2.86e−05
H
R_Z −0.908
R_Z −0.949
H
H
R_Z −0.195
R_Z 1.23
R_Z −0.0727
R_Z 0.323
R_Z 0.396
R_Y −0.83
H
H
R_Y 0.83
R_Z −0.323
R_Z 0.554
H
R_Z −0.507
H
R_Y −0.196
H
R_Z 0.0386
H
R_Y −0.156
H
H
H
H
H
R_Y 0.196
R_Y 0.156
H
R_Z −0.22
R_Z −1.01
R_Z −2.08
H
R_Z 0.0564
R_Z 1.22
H
R_Z −0.38
R_Z −1.21
H
H
R_Y −0.000351
H
R_Y −0.339
H
R_Z −0.609
H
R_Z −0.0116
H
H
H
H
R_Y 0.000351
R_Y 0.339
H
R_Z −1
H
R_Z −0.364
H
R_Z −0.22
R_Z −0.19